2016 Carryall 500 and 550 Illustrated Parts List

Gasoline and Electric Vehicles

Manual Number 105334604
Edition Code 0615C0616B

USING THE ILLUSTRATED PARTS LIST

⚠ WARNING

- **This manual is to be used only for identification and ordering of service parts. Be sure to read and use the maintenance and service manual before attempting any vehicle repairs.**

This manual covers all 2016 Carryall 500 and Carryall 550 gasoline and electric vehicles.

The manual is divided into sections. Note that there are two or three flags on the outside edge of each page. The first flag contains the section number of which that page is a part. The other flag (or flags) contains the letter D, E, or G, signifying that the page pertains to the diesel, electric, or gasoline vehicles only.

Use the Table of Contents to find the sections and pages that contain the parts and assemblies you seek. The Table of Contents lists section numbers, and under them, the individual page titles and numbers to be found in that section. The index can be used to find specific parts and assemblies. The index is divided into numerical and alphabetical listings with the page numbers in italic text.

There is a two-page spread for each individual page title in the Table of Contents. On the left-hand page is an illustration showing the parts in their relative positions; the parts are each tagged with an item number in a balloon. The right-hand page is the parts list page, and gives the page title at the top, then the item numbers (corresponding to the numbers on the illustration), part descriptions, and quantity of parts used.

Note that a part description may be indented. This indention corresponds to a parts assembly level indicated by the numbers 1, 2, 3, and 4 at the top left corner of the parts description area of the parts list page. A part that is indented to *level 2* is a component of the *level 1* part (assembly) that it is listed under. A *level 3* part is a component of the *level 2* part that it is listed under, and a *level 4* part is a component of the *level 3* part preceding it. In each case, the part quantity given for a level 2, 3, or 4 part *is the quantity used per next higher level assembly of which it is a component*. A part that is not indented is a *level 1* part. This means that the quantity given is the quantity used per the portion of the vehicle illustrated on that particular spread.

Club Car®

P. O. Box 204658
Augusta, Georgia 30917-4658 USA
Telephone 706-863-3000
Service Parts Fax 706-855-7413
www.clubcar.com

HOW TO ORDER PARTS

Replacement parts and accessories can be obtained from our network of authorized dealers and distributors. You can obtain the name and phone number of your closest authorized Club Car dealer or distributor by visiting our web site at www.clubcardealer.com, by calling our toll-free Service Parts and Technical Assistance hotline at (800) 872-2246 or (706) 863-3000, extension 3887, or by scanning this Quick Response (QR) code to be taken to the Club Car dealer locator. **Refer to Figure 1.** Download a QR code reader such as RedLaser or Barcode Scanner to your cell phone or tablet.

Figure 1 Dealer Locator QR Code

CUSTOMER SATISFACTION SURVEY

Let your voice be heard!

Please take time to participate in the Technical Publications satisfaction survey. Obtaining feedback from our customers is important to the department's continuous improvement process. The online survey takes less than five minutes and responses will help the department to examine current performance as well as identify areas for future improvement. Our top priority is to provide timely, accurate, and user friendly manuals.

The online satisfaction survey can be found at: http://bit.ly/1w9uFMh

Figure 2 Survey QR Code

NOTE: *This illustrated parts list represents the most current information at the time of publication. Club Car, LLC is continually working to further improve its vehicles and other products. These improvements may affect the parts used to service the vehicle. Any modification and/or significant change in specifications will be forwarded to all Club Car and Carryall distributors/dealers and will, when applicable, appear in future editions of this illustrated parts list.*

Club Car, LLC reserves the right to change specifications and designs at any time without notice and without the obligation of making changes to units previously sold.

Copyright © 2015 Club Car, LLC.
Club Car is a registered trademark of Club Car, LLC.
This manual effective July 7, 2015.

CONTENTS

SECTION 1 – BODY AND TRIM

Heavy Duty Front Bumper 1-3
Headlight Guard 1-5
Fender Guard 1-7
Front License Plate Holder 1-9
Front Body 1-11
Body Touch-Up Paint 1-13
Front Bumper, Grille, and Fenders 1-15
Headlight Bezels 1-17
Dash, Glovebox Door, and Floormat 1-19
Front Frame, Standard 1-21
Front Frame (Lifted) – CA550 1-23
Seat Bottom 1-25
Seat Back 1-27
Seat Frame and Hip-Restraint 1-29
Rear Facing Fold Down Seat 1-31
Rear Seats – Vehicle with Fold-Down Rear Seat 1-33
Windshield, Hinged 1-35
Windshield, Non-Hinged 1-37
Canopy Kit, White 1-39
Canopy Kit, Biege 1-41
Canopy Kit, Black 1-43
Mirrors 1-45
Inner Rear Fenders 1-47
Rear Fenders and Tail Skirt 1-49
Rear Fenders – Vehicle with Fold-Down Rear Seat 1-51
Rear License Plate Holder 1-53
Bed Hinge, Latch, and Prop Rod – Medium 1-55
Tilt Bed and Bed Latch – Medium 1-57
Electric Bed Lift – Medium, Electric Vehicles 1-59
Electric Bed Lift – Gasoline Vehicles 1-61
Flat Bed Trim – Medium 1-63
Cargo Box Kit – Medium (Page 1 of 2) 1-65
Cargo Box Kit (Page 2 of 2) 1-67
Tailgate Teather 1-69
Modular Bed Accessories 1-71
Modular Bed Accessories 1-73
Modular Bed Accessories 1-75
Stake Side Kit – Medium 1-77

CONTENTS

Heavy Duty Trailer Hitch 1-79
Rear Reciever Hitch 1-81
Trailer Hitch Ball 1-83
Range Picker Adapter 1-85
Cab Canopy 1-87
Cab Doors – Glass 1-89
Cab Doors – Soft 1-91
Cab Doors – Range 1-93
Cab Doors – Vent 1-95
Cab - Mirrors 1-97
Cab – Windshield 1-99
Cab – Seat Belts 1-101
Cab – Electrical, Power Harness, Electric Vehicle to Cab 1-103
Cab – Electrical, Cab Power Harness, Gasoline Vehicle to Cab 1-105
Cab – Electrical, Overhead Console 1-107
Cab – Electrical, Windshield Wiper 1-109
Cab – Electrical, Windshield Washer 1-111
Cab – Electrical, Work Lights 1-113
Cab – Electrical, Warning Beacon 1-115
Cab – Rear Window 1-117
Cab – Exhaust 1-119
Enclosures 1-121
Van Box – Gray 1-123
Van Box – White 1-125
Van Box, Medium – Service Parts 1-127
Toolboxes 1-129

SECTION 2 – WHEELS AND TIRES

Wheels and Tires 2-3
Wheels and Tires – Carryall 550 2-5
Wheels and Tires, Off-Road – Carryall 550 2-7
Wheel Covers 2-9
Wheel Covers – Carryall 550 2-11

SECTION 3 – DECALS

Decals – Electric Carryall 500 3-3
Decals – Electric Carryall 550 3-5
Decals – Electric Carryall 500/550, Continued 3-7
Decals – Gasoline Carryall 500 3-9

CONTENTS

Decals – Gasoline Carryall 550 3-11
Decals – Gasoline Carryall 500/550, Continued 3-13
Badging Decals – Carryall 500 3-15
Badging Decals – Carryall 550 3-17

SECTION 4 – LIGHTS, CONTROLS, AND INDICATORS

Headlights 4-3
12-Volt Fuse Block and Fuses – Electric Vehicle 4-5
Horn, Turn Signals, and Taillights – Electric and Gasoline Vehicles 4-7
Horn and Tail Light Kit – Electric and Gasoline Vehicles 4-9
Instrument Panel – Electric Vehicle 4-11
Instrument Panel – Gasoline Vehicle 4-13
Keyswitch – Electric Vehicle 4-15
Keyswitch, Private Speed Mode - Electric Vehicle 4-17
Keyswitch, Pedal-Start – Gasoline Vehicle 4-19
Keyswitch, Key-start – Gasoline Vehicle 4-21
DC Converter – Electric Vehicle 4-23
DC Converter, Heavy Duty – Electric Vehicle 4-25
Voltage Limiter – Gasoline Vehicle 4-27
Strobe Light, Post Mounted – Gasoline Vehicles 4-29
Strobe Light, Post Mounted – Electric Vehicles 4-31
Strobe Light – Canopy Mounted 4-33
Reflectors 4-35
Heater Defogger – Electric Vehicle 4-37

SECTION 5 – BRAKES, PEDALS, AND CABLE ASSEMBLIES

Brake Pedal Assembly – Vehicles with 2-Wheel Brakes and 4-Wheel Brakes 5-3
Accelerator Pedal Assembly – Electric Vehicles 5-5
Accelerator Pedal and Rod Assembly – Gasoline Vehicle 5-7
Pedal Close-Out Kit 5-9
Front Brake Assembly – Vehicles with 4-Wheel Brakes 5-11
Front Brake Cables and Equalizer – Gasoline Vehicle with 4-Wheel Brakes 5-13
Front Brake Cables and Equalizer – Electric Vehicle with 4-Wheel Brakes 5-15
Rear Brake Cables and Equalizer – Gasoline Vehicle with 4-Wheel Brakes 5-17
Rear Brake Cables and Equalizer – Electric Vehicle with 4-Wheel Brakes 5-19
Rear Brakes, Manually-Adjusted – Elec. Vehicles with 4-Wheel Brakes 5-21
Rear Brakes, Manually-Adjusted – Gas Vehicles with 4-Wheel Brakes 5-23

CONTENTS

SECTION 6 – STEERING, FRONT AND REAR SUSPENSION

Steering Gear Assembly 6-3
Steering Column 6-5
Steering Wheel 6-7
Steering Wheel with Clip 6-9
Front Suspension, Upper, STD 6-11
Front Suspension, Lower, STD, 1 Leaf-3 Plates 6-13
Front Suspension, Upper, HD 6-15
Front Suspension, Lower, HD, 3 Leaf-1 Plate 6-17
Front Suspension, Upper, STD 6-19
Front Suspension, Lower, HD, 2 Leaf-2 Plates 6-21
Front Suspension, Upper, HD 6-23
Front Suspension, Lower, HD, 3 Leaf-1 Plate 6-25
Steering Stop 6-27
Front Wheel Hubs 6-29
Rear Suspension Components, Standard 6-31
Rear Suspension Components (Lifted) 6-33

SECTION 7 – ELECTRICAL SYSTEM – GASOLINE EFI

Wiring, Fuses, and Diodes, Pedal-Start – EFI 7-3
Wiring, Fuses, and Diodes, Key-Start – EFI 7-5
Starter/Generator (Model 114-04-4006), Key-Start – EFI 7-7
Starter/Generator (Model 114-05-4001) , Pedal-Start – EFI 7-9
Starter/Generator Mounting, EX40 – To Early-2016 Model Year 7-11
Starter/Generator Mounting, EX40 – From Early-2016 Model Year 7-13
Operation and Maintenance Switch 7-15
Electrical Component Box, Key-Start – EX40 7-17
Electrical Component Box, Pedal-Start – EX40 7-19
Forward/Reverse Shifter Switches, Key-Start – EFI 7-21
Forward/Reverse Shifter Switches, Pedal-Start – EFI 7-23
Charging Diode, Key-Start – EFI 7-25
Battery – Gasoline Utility Vehicles 7-27
Top-Post Battery - Gasoline Utility Vehicles 7-29

SECTION 8 – ENGINE (SUBARU EX40)

Tune-Up Parts – Subaru EX40 8-3
Engine and Engine Mounting, Utility – To Early-2016 Model Year 8-5
Engine and Engine Mounting, Utility – From Early-2016 Model Year 8-7

CONTENTS

Fan and Shroud – EX40 8-9
Air Deflector – EX40 8-11
Ignition Components and Flywheel – EX40 8-13
Sensors – EX40 8-15
Cylinder Head – EX40 8-17
Valvetrain and Timing Chain – EX40 8-19
Crankcase – EX40 8-21
Crankshaft and Piston – EX40 8-23

SECTION 9 – FUEL SYSTEM – EFI

Fuel Tank with Sending Unit, Side Fill – EFI 9-3
Fuel Tank Kits – EFI 9-5
Carbon Canister – EFI 9-7
Throttle Body and ECU – EFI 9-9
Throttle Body Mounting – EFI 9-11
Governor and Accelerator Cables – EFI 9-13
Air Filter System and Intake Hose – EFI 9-15
Air Filter System and Intake Hose – EFI, LWB Utility/Trans 9-17

SECTION 10 – EXHAUST SYSTEM – EX40 ENGINE

Exhaust System – Utility 10-3

SECTION 11 – DRIVE BELT AND CLUTCHES – EX40

Drive Belt – Key-Start Vehicles with EFI 11-3
Drive Belt – Pedal-Start Vehicles with EFI 11-5
Drive Clutch – Key-Start Vehicles 11-7
Drive Clutch – Pedal-Start Vehicles 11-9
Driven Clutch (Standard Speed) – Key Start and Pedal Start 11-11

SECTION 12 – TRANSAXLE (FUJI ED65)

Forward/Reverse Shifter Assembly 12-3
Shifter Cable – CA500 & CA550 12-5
Shift Lever and Bracket – Pedal-Start Engines 12-7
Shift Lever and Bracket – Key-Start Engines 12-9
Governor Arm and Brackets – Utility Vehicles 12-11
Transaxle (ED65), Limited Slip – Page 1 of 3 12-13
Transaxle (ED65), Open – Page 1 of 3 12-15
Transaxle (ED65), Limited Slip and Open – Page 2 of 3 12-17

CONTENTS

Transaxle (ED65), Limited Slip – Page 3 of 3 12-19
Transaxle (ED65), Open – Page 3 of 3 12-21
Hub, Rear 12-23

SECTION 13 – ELECTRICAL SYSTEM – ELECTRIC VEHICLES

Motor Controller Output Regulator (MCOR) 13-3
Main Wiring Harness, 48-Volt Fuse Block – Electric Vehicle 13-5
Tow/Run Switch and Hour Meter 13-7
Electric Components – Electric Vehicle 13-9
Batteries 6-Volt, Standard Duty 13-11
Batteries 6-Volt, Heavy Duty 13-13
Single Point Watering System (SPWS) 13-15
Hand Pump and Deionizer (Battery-Powered Quality Light) 13-17

SECTION 14 – ELECTRIC MOTOR

Motor (Model DA5-4006) – IQ Plus 14-3

SECTION 15 – TRANSAXLE – ELECTRIC VEHICLES

Transaxle – Electric Vehicles 15-3

SECTION 16 – BATTERY CHARGERS – HIGH-FREQUENCY

On-Board Battery Charger, High-Freq. 16-3

SECTION 17 – MAINTENANCE AND SERVICE TOOLS

Maintenance and Service Tools 17-3
Maintenance and Service Tools, Continued 17-5
Maintenance and Service Tools, Continued 17-7

SECTION i – INDEX

BODY AND TRIM

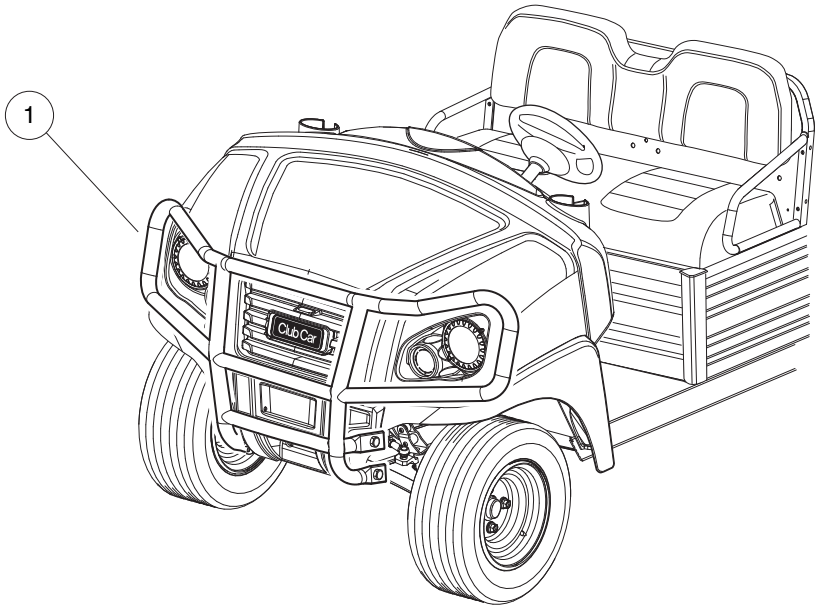

001100-002

HEAVY DUTY FRONT BUMPER

ITEM	PART NO.	DESCRIPTION	QTY
		1 2 3 4	
1	105100601	Kit, Hd Bumper, Hb Res	1
		Note: Individual components are not procurable. Steering Stops, 105242801 and 105243001 are also required when installing the HD Bumper Kit.	

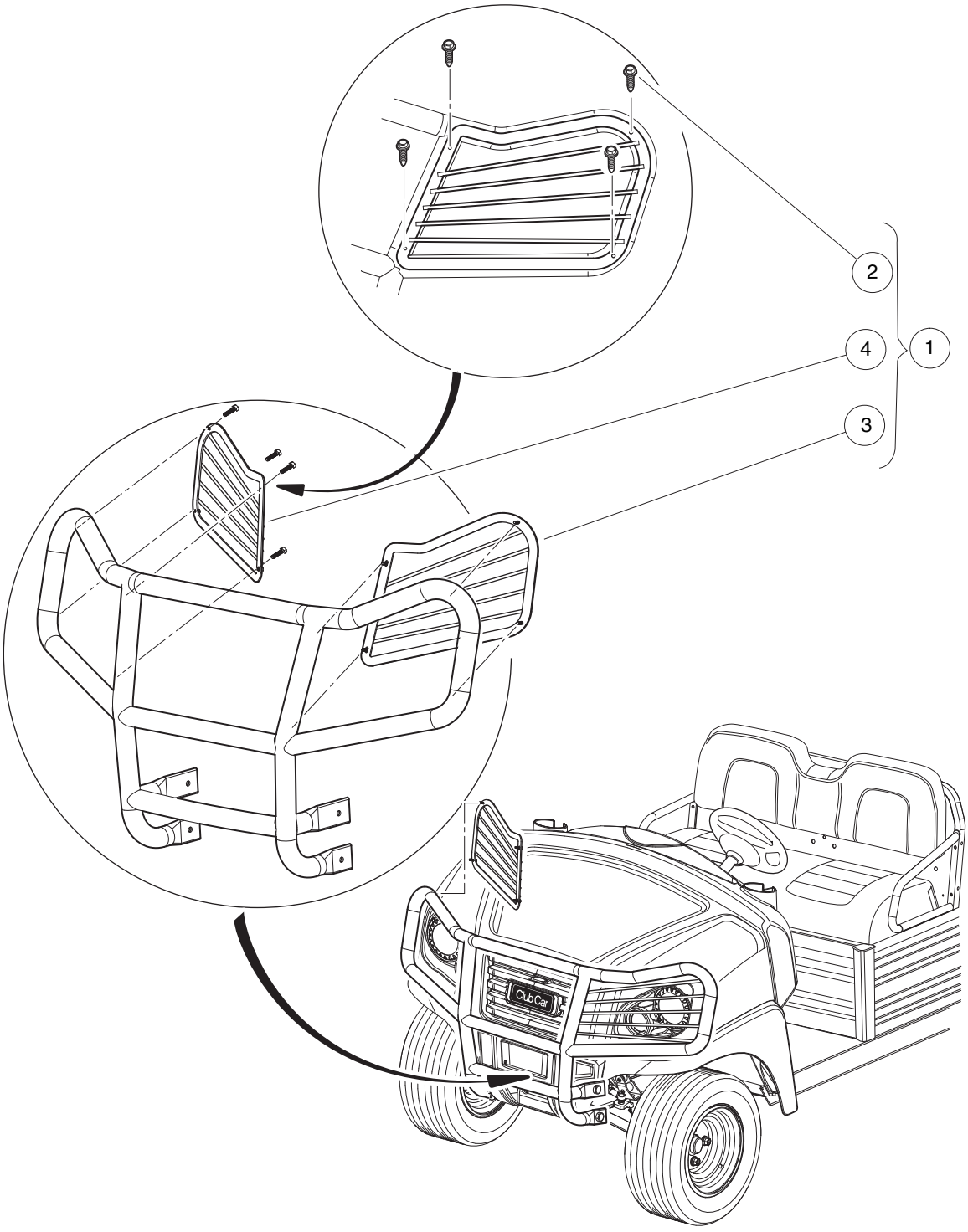

001300-017

HEADLIGHT GUARD

ITEM	PART NO.	DESCRIPTION	QTY
		1 2 3 4	
1	105156301	Kit, Head Light Guard, Utl Res (includes items 2 through 4)	1
2	102296819	Screw-M6 x 19	8
3	105156701	Guard, Headlight, UTL,LH	1
4	105156702	Guard, Head Light, Utl, Rh	1

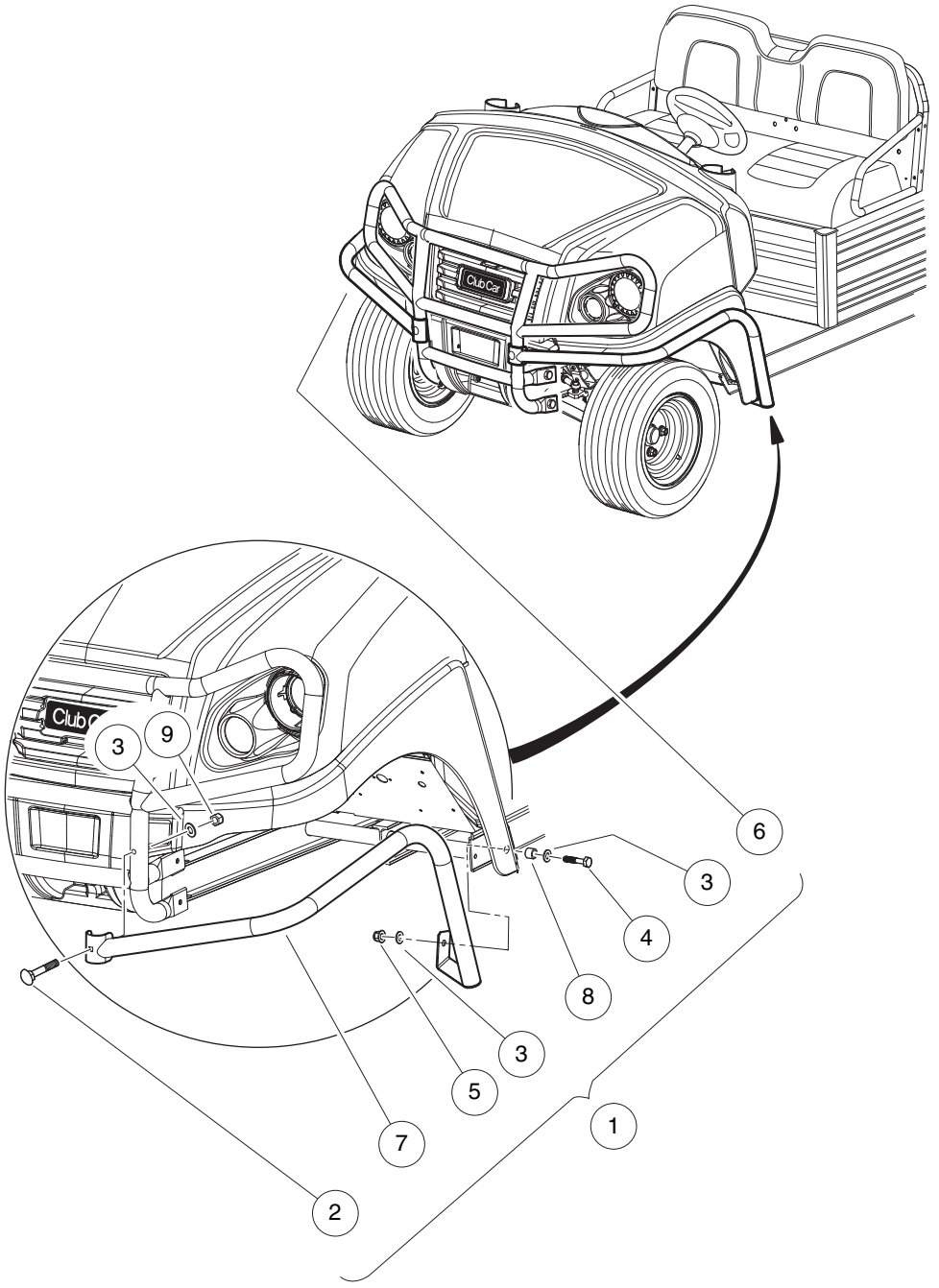

001300-002

FENDER GUARD

ITEM	PART NO.	DESCRIPTION	QTY
		1 2 3 4	
1	105124001	Kit, Fender Guard, Hb Res (includes items 2 through 9)	1
2	101242802	Bolt,3/8-16 X 2.25 Rd Hd Sq Bk	2
3	102323501	Washer, Flat, 3/8, Blk Fin	6
4	102621601	Bolt, M10 X 1.50 X 45 Black	2
5	102670701	Nut, Flange, M10 X 1.5 Nylon	2
6	105074501	Weldment, Fender Guard, Hb, Rh	1
7	105074502	Weldment, Fender Guard, Hb, Lh	1
8	105094001	Spacer, Canopy Support, Dash	2
9	8754	Locknut, 3/8-16 Hex	2

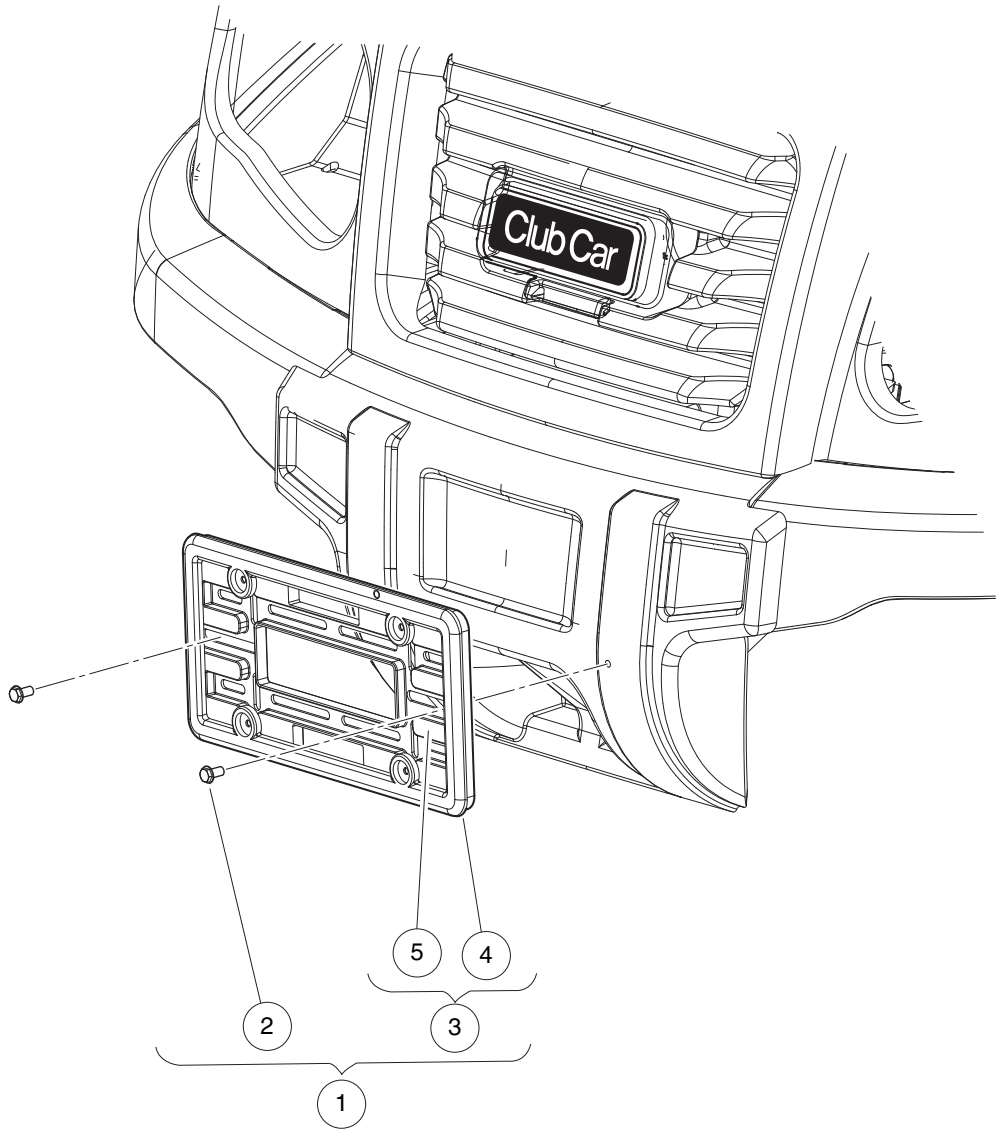

001155-001

FRONT LICENSE PLATE HOLDER

ITEM	PART NO.	DESCRIPTION	QTY
		1 2 3 4	
1	105124901	Kit, Front, License Pl, Lsv (includes items 2 and 3)	1
2	101856101	Screw, 1/4-15 X .50 Hi-lo Hex	2
3	102311501	Front License Plate Assembly (includes items 4 and 5)	1
4	N/A	Frame, License Plate	1
5	N/A	Mount, License Plate	1

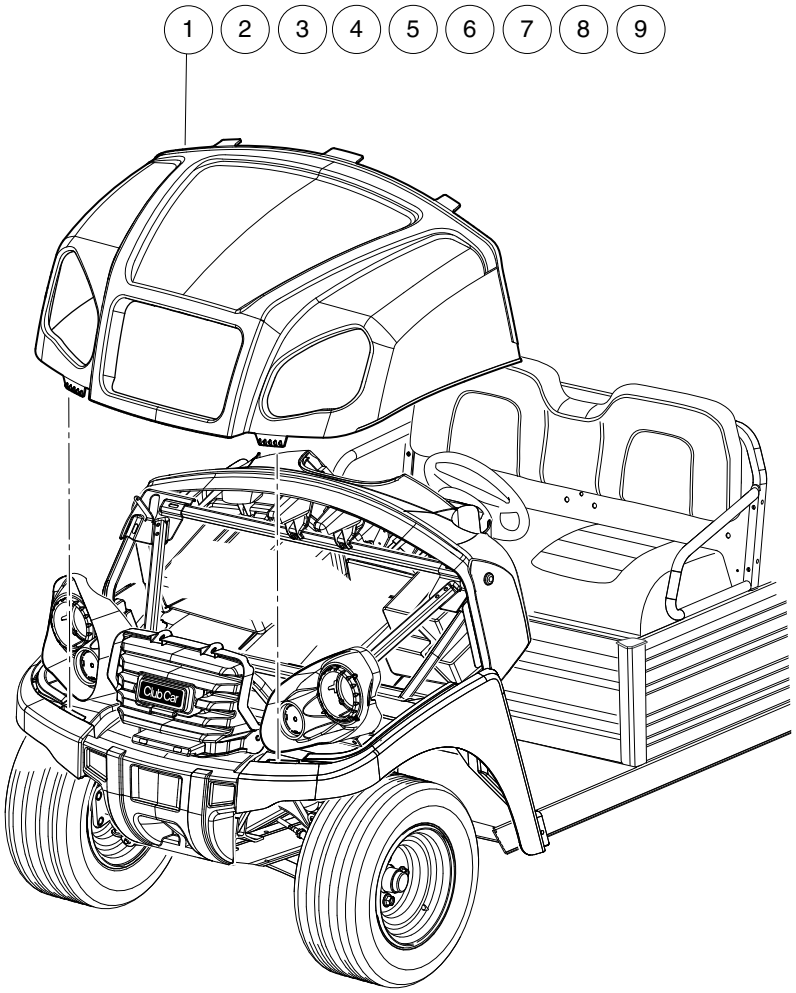

001300-003

ITEM	PART NO.	DESCRIPTION	QTY
		1 2 3 4	
1	105034321	Cowl, Ca, Serv, Dk Green	1
2	105034322	Cowl, Ca, Serv, Dk Gray	1
3	105034323	Cowl, Ca, Serv, White	1
4	105034324	Cowl, Ca, Serv, Bright Blue	1
5	105034325	Cowl, Ca, Serv, Titn Silver	1
6	105034326	Cowl, Ca, Serv, Beige	1
7	105034327	Cowl, Ca, Serv, Red	1
8	105034328	Cowl, Ca, Serv, Black	1
9	105034329	Cowl, Ca, Serv, Classic Blue	1

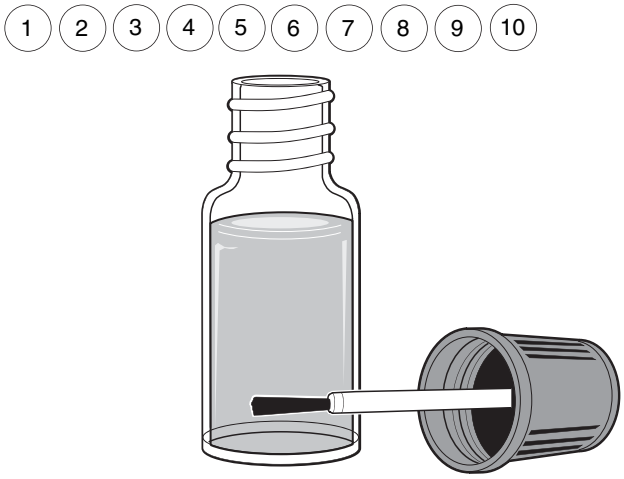

001300-020

BODY TOUCH-UP PAINT

ITEM	PART NO.	DESCRIPTION	QTY
		1 2 3 4	
1	105117701	Paint, Touch-up, White	1
2	105117702	Paint, Touch-up, Classic Blue	1
3	105117703	Paint, Touch-up, Dark Green	1
4	105117704	Paint, Touch-up, Red	1
5	105117705	Paint, Touch-up, Dark Gray	1
6	105117706	Paint, Touch-up, Black	1
7	105117707	Paint, Touch-up, Tan	1
8	105117708	Paint, Touch-up, Bright Blue	1
9	105117709	Paint, Touch-up, Titn Silver	1
10	105117710	Paint, Touch-up, Light Gray	1

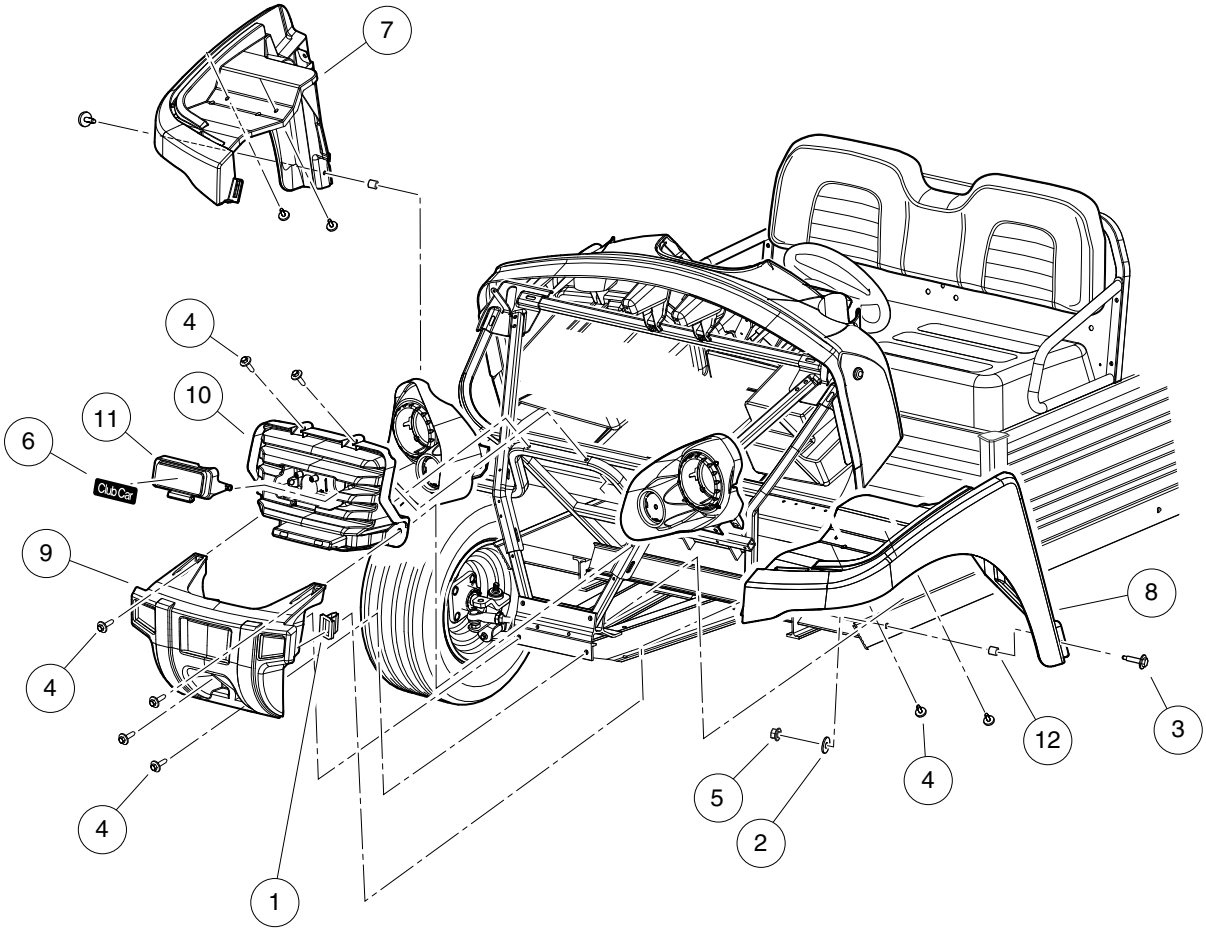

001300-004

FRONT BUMPER, GRILLE, AND FENDERS

ITEM	PART NO.	DESCRIPTION	QTY
		1 2 3 4	
1	102292701	Clip-body-trim	2
2	102296301	Washer, M6x18x1.6 Flat	2
3	102296530	Screw - M6 X 1.0 X 30 Sems	6
4	102297125	Screw, M6-1.0x25.4, Thread-Forming, SEMS	8
5	102541501	Nut-m6x1.0 Fl Mtl Lock,blk	2
6	102883601	Decal, Nameplate, CCI, Front	1
7	105034401	Fender, Front, Rh, Ca	1
8	105034501	Fender, Front, Lh, Ca	1
9	105034601	Bumper, Front, Plastic, Ca	1
10	105034701	Grille, Ca	1
11	105034801	Door, Charger Port, Ca	1
12	105036701	Spacer, Frt Fender, Ca	2

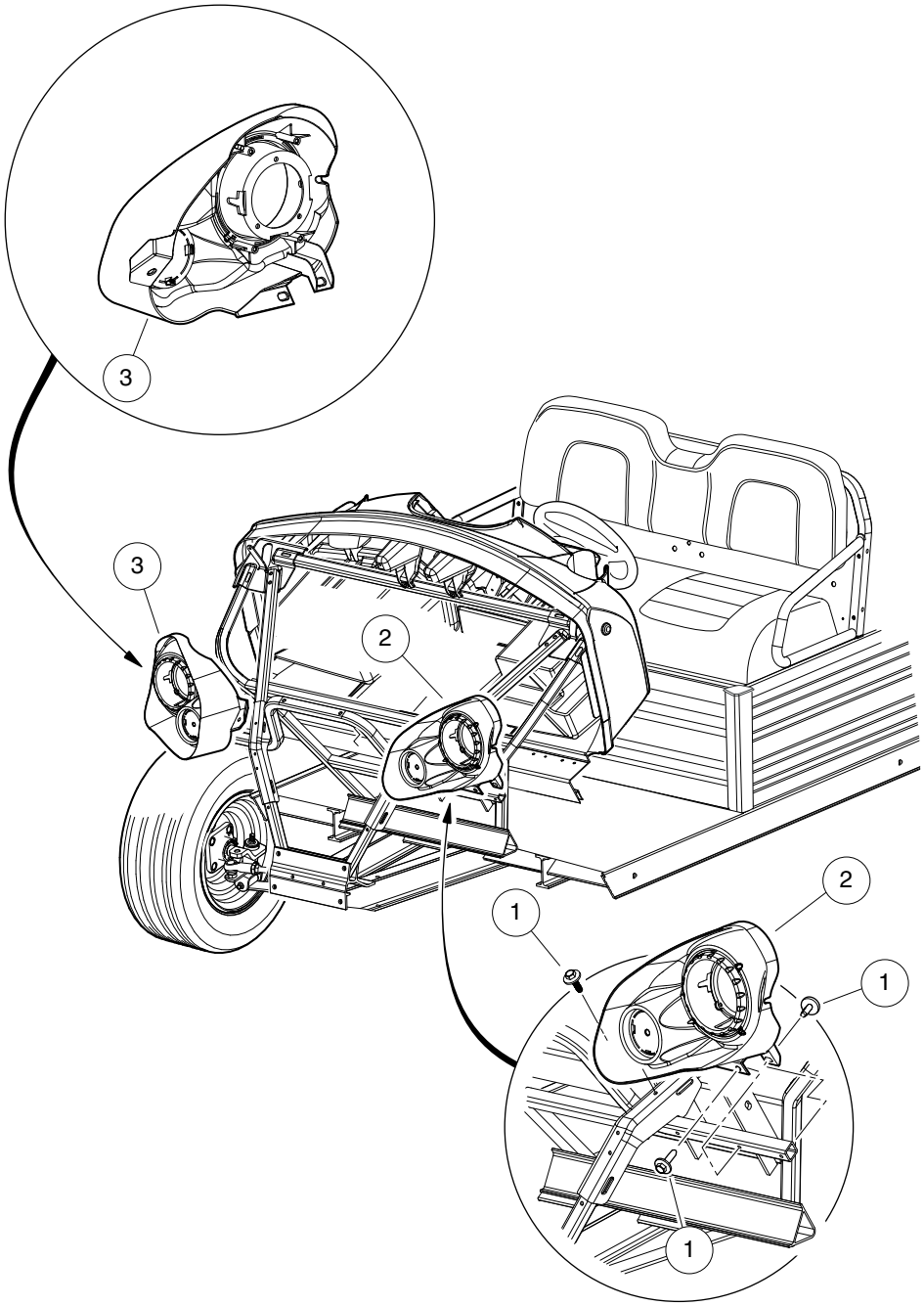

001300-005

HEADLIGHT BEZELS

ITEM	PART NO.	DESCRIPTION	QTY
		1 2 3 4	
1	102297125	Screw, M6-1.0x25.4, Thread-Forming, SEMS	6
2	105034901	Bezel, Hl, Lh, Ca	1
3	105035001	Bezel, Hl, Rh, Ca	1

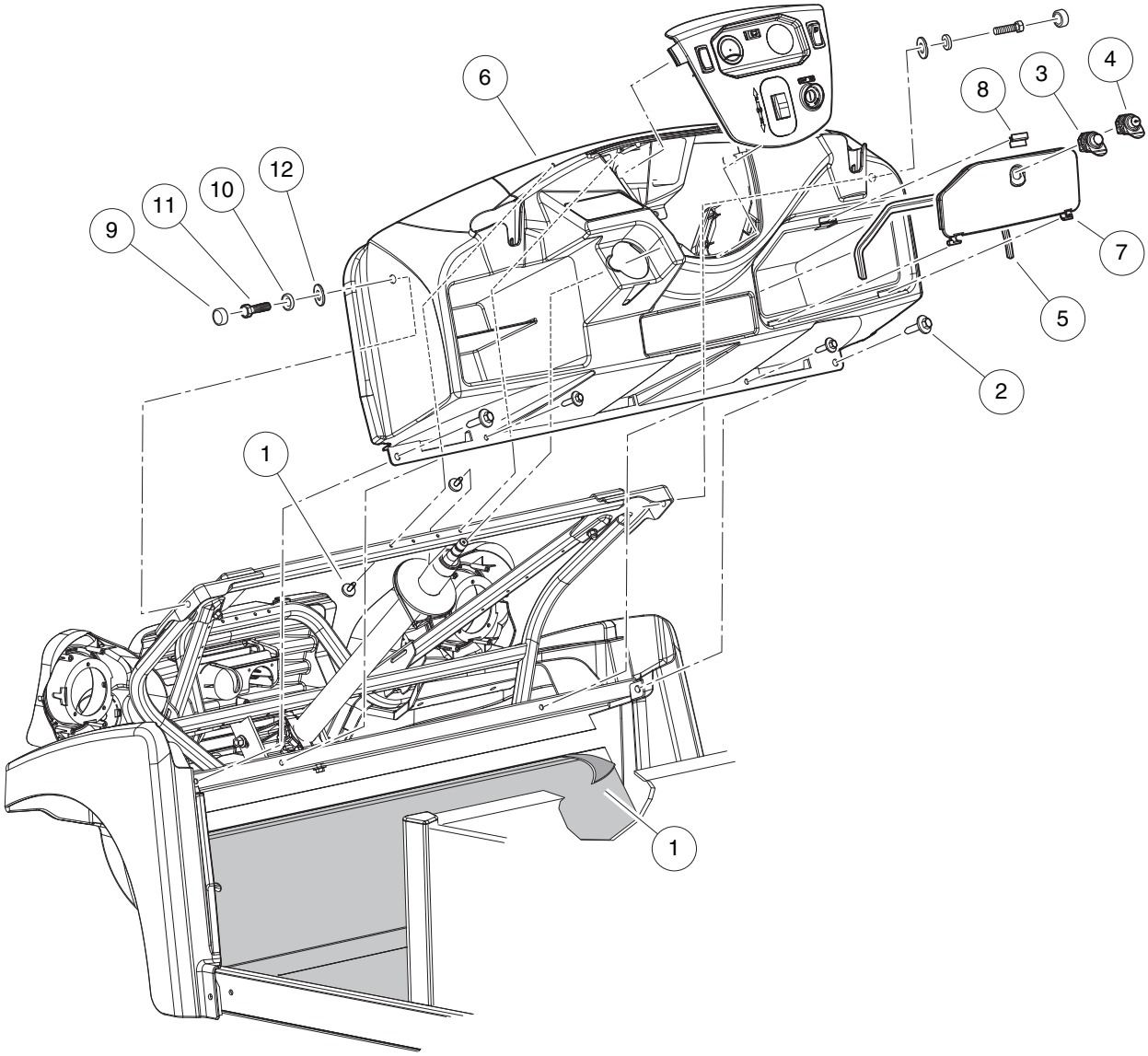

001300-006

DASH, GLOVEBOX DOOR, AND FLOORMAT

ITEM	PART NO.	DESCRIPTION	QTY
		1 2 3 4	
1	101503202	Floormat	1
2	102297125	Screw, M6-1.0x25.4, Thread-Forming, SEMS	6
3	103182701	Latch, Push Close	1
4	103182702	Latch, Push Close W/ Key	1
5	103540203	Seal, Bulb, 13 X 27 X 579 Mm	1
6	105034001	Dash, Ca	1
7	105034201	Door, Glove Box, Ca	1
8	105035701	Keeper, Latch, Ca	1
9	105049201	Cover, Bolt, Rh Series	2
10	105049301	Cover, Washer, Rhw Series	2
11	320	Screw, 3/8-16 X 1.00 Hex-Head Cap	2
12	334	Washer, 3/8, Type A, Flat	2

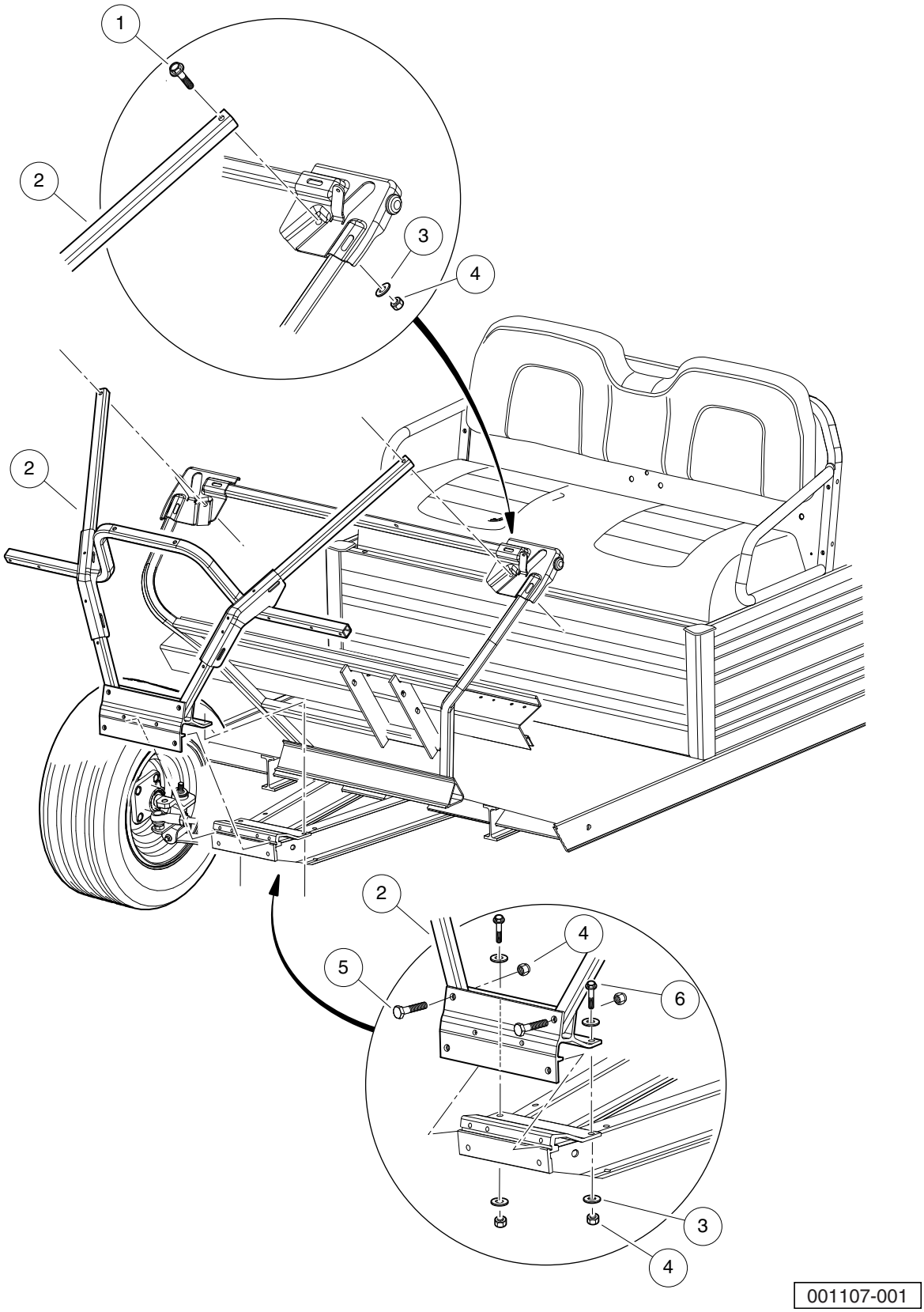
1
2
3
4
2
2
4
5
6
3
4
001107-001

FRONT FRAME, STANDARD

ITEM	PART NO.	DESCRIPTION	QTY
		1 2 3 4	
1	1011937	Bolt, 5/16-18 X 1.25 Hex Head	2
2	105007001	Weldment, Front, Util, Std	1
3	1241	Washer, 5/16 Type A Flat	6
4	7473	Locknut, 5/16-18 Nylon Insert	6
5	8935	Screw, 5/16-18 X 2.25 Hex-Head Cap	2
6	8963	Screw, 5/16-18 X 1.75 Hex-Head Cap	2

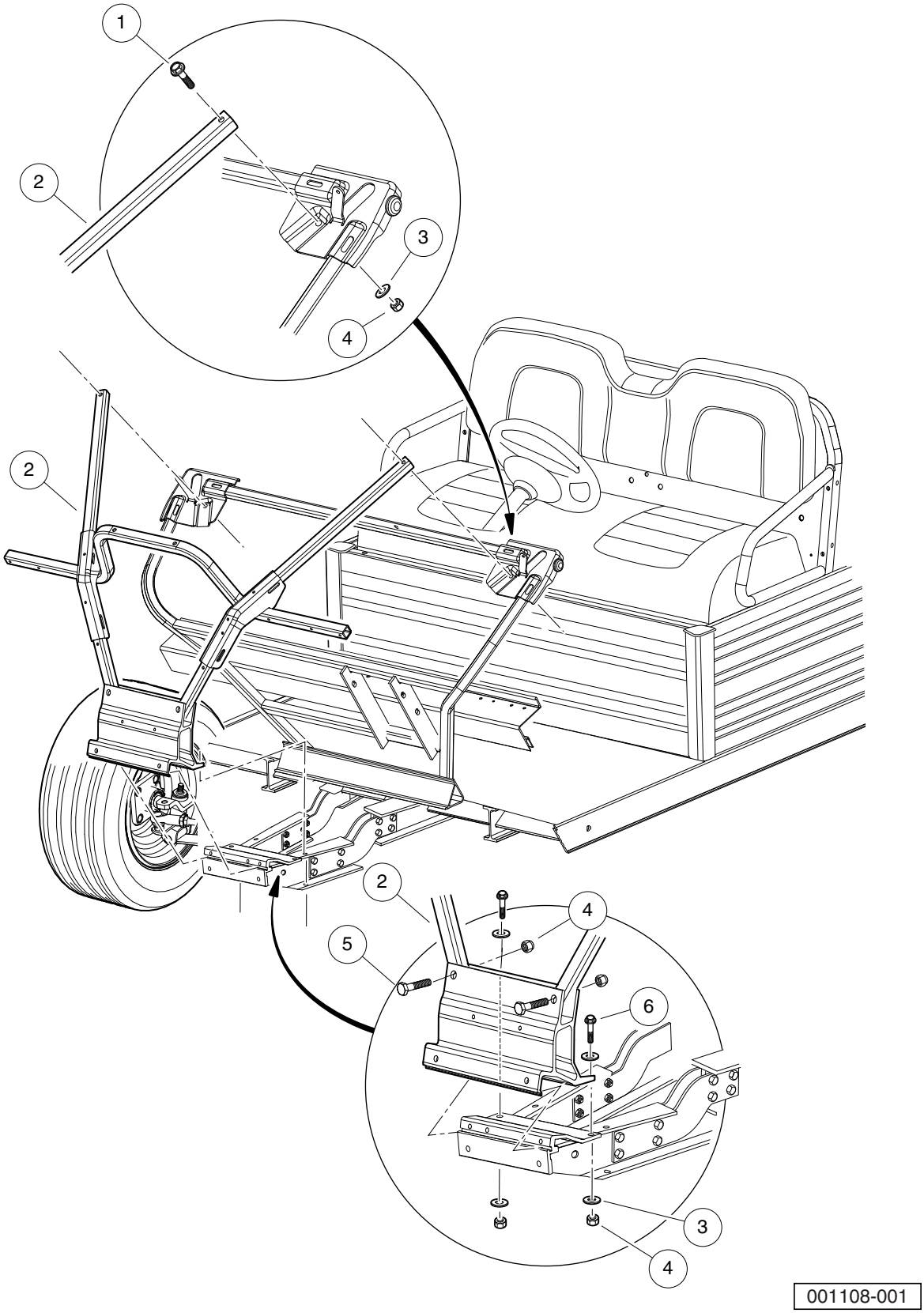
1
2
3
4
2
2
4
5
6
3
4
001108-001

FRONT FRAME (LIFTED) – CA550

ITEM	PART NO.	DESCRIPTION	QTY
		1 2 3 4	
1	1011937	Bolt, 5/16-18 X 1.25 Hex Head	2
2	105007002	Weldment, Front, Util, Drop	1
3	1241	Washer, 5/16 Type A Flat	8
4	7473	Locknut, 5/16-18 Nylon Insert	6
5	8935	Screw, 5/16-18 X 2.25 Hex-Head Cap	2
6	8963	Screw, 5/16-18 X 1.75 Hex-Head Cap	2

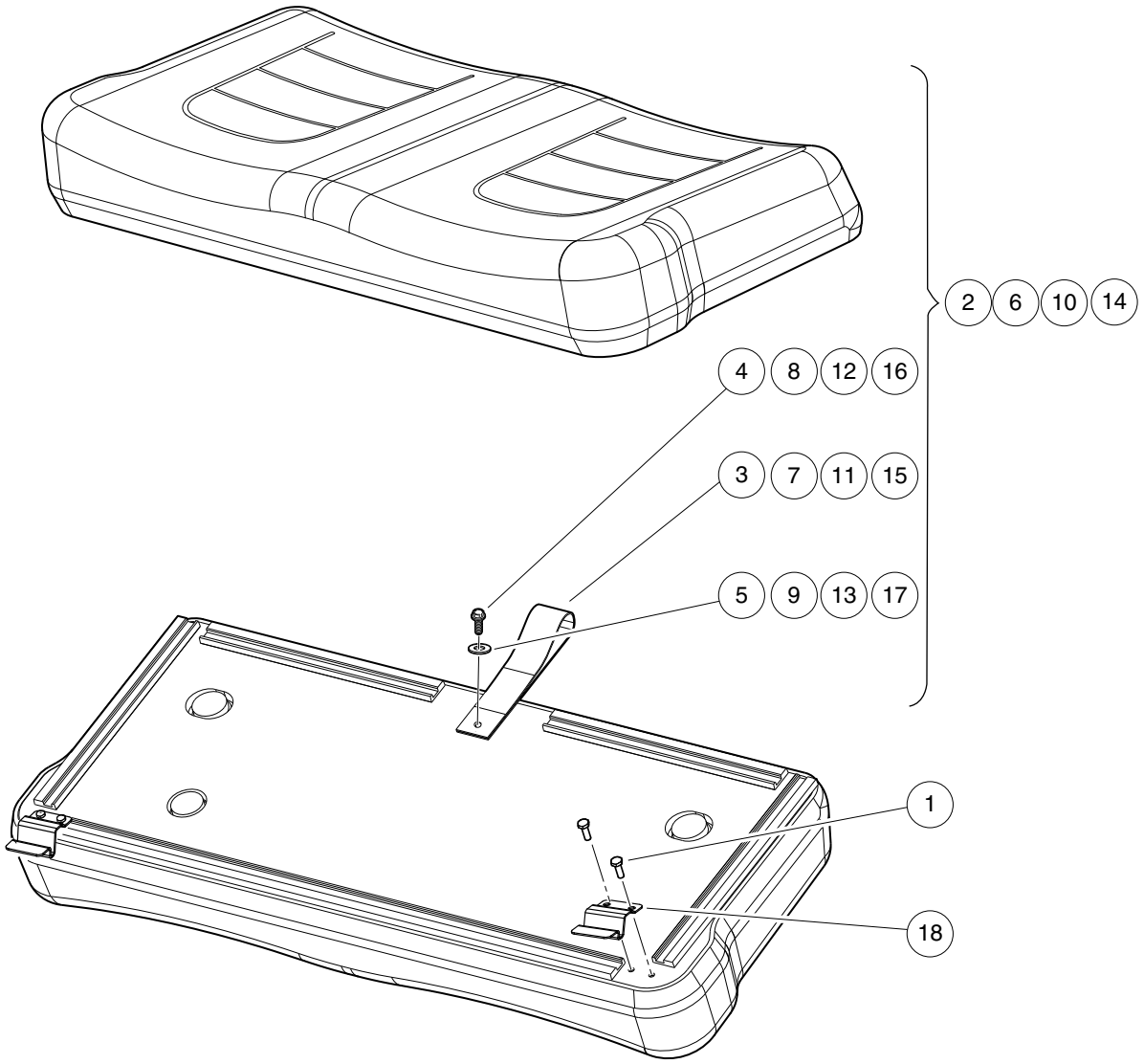

001300-021

SEAT BOTTOM

ITEM	PART NO.	DESCRIPTION	QTY
		1 2 3 4	
1	101954301	Screw, 1/4-20 X 0.75 Hex-Head Cap	4
2	105064521	Asm, Seatbottom, White, Ca, Sp (includes items 3 through 5)	1
3	1013309	Strap, Utility Seat	1
4	101954301	Screw, 1/4-20 X 0.75 Hex-Head Cap	1
5	332	Washer, 1/4 Type A Narrow Flat	1
6	105064522	Asm, Seatbottom, Black, Ca, Sp (includes items 7 through 9)	1
7	1013309	Strap, Utility Seat	1
8	101954301	Screw, 1/4-20 X 0.75 Hex-Head Cap	1
9	332	Washer, 1/4 Type A Narrow Flat	1
10	105064523	Asm, Seatbottom, Gray, Ca, Sp (includes items 11 through 13)	1
11	1013309	Strap, Utility Seat	1
12	101954301	Screw, 1/4-20 X 0.75 Hex-Head Cap	1
13	332	Washer, 1/4 Type A Narrow Flat	1
14	105064524	Asm, Seatbottom, Beige,ca, Sp (includes items 15 through 17)	1
15	1013309	Strap, Utility Seat	1
16	101954301	Screw, 1/4-20 X 0.75 Hex-Head Cap	1
17	332	Washer, 1/4 Type A Narrow Flat	1
18	105200401	Bracket,Hinge, Seat,CA	2

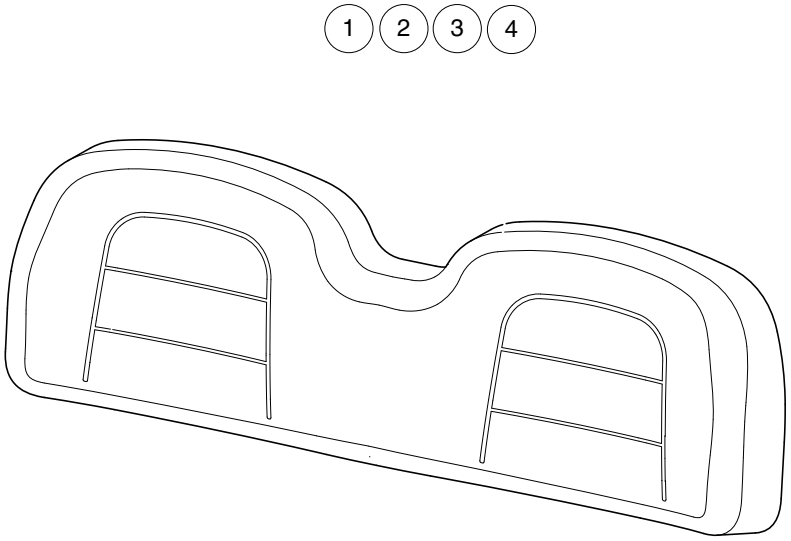

001300-022

SEAT BACK

ITEM	PART NO.	DESCRIPTION	QTY
		1 2 3 4	
1	105064121	Asm, Seatback, White, Ca, Sp	1
2	105064122	Asm, Seatback, Black, Ca, Sp	1
3	105064123	Asm, Seatback, Gray, Ca, Sp	1
4	105064124	Asm, Seatback, Beige, Ca, Sp	1

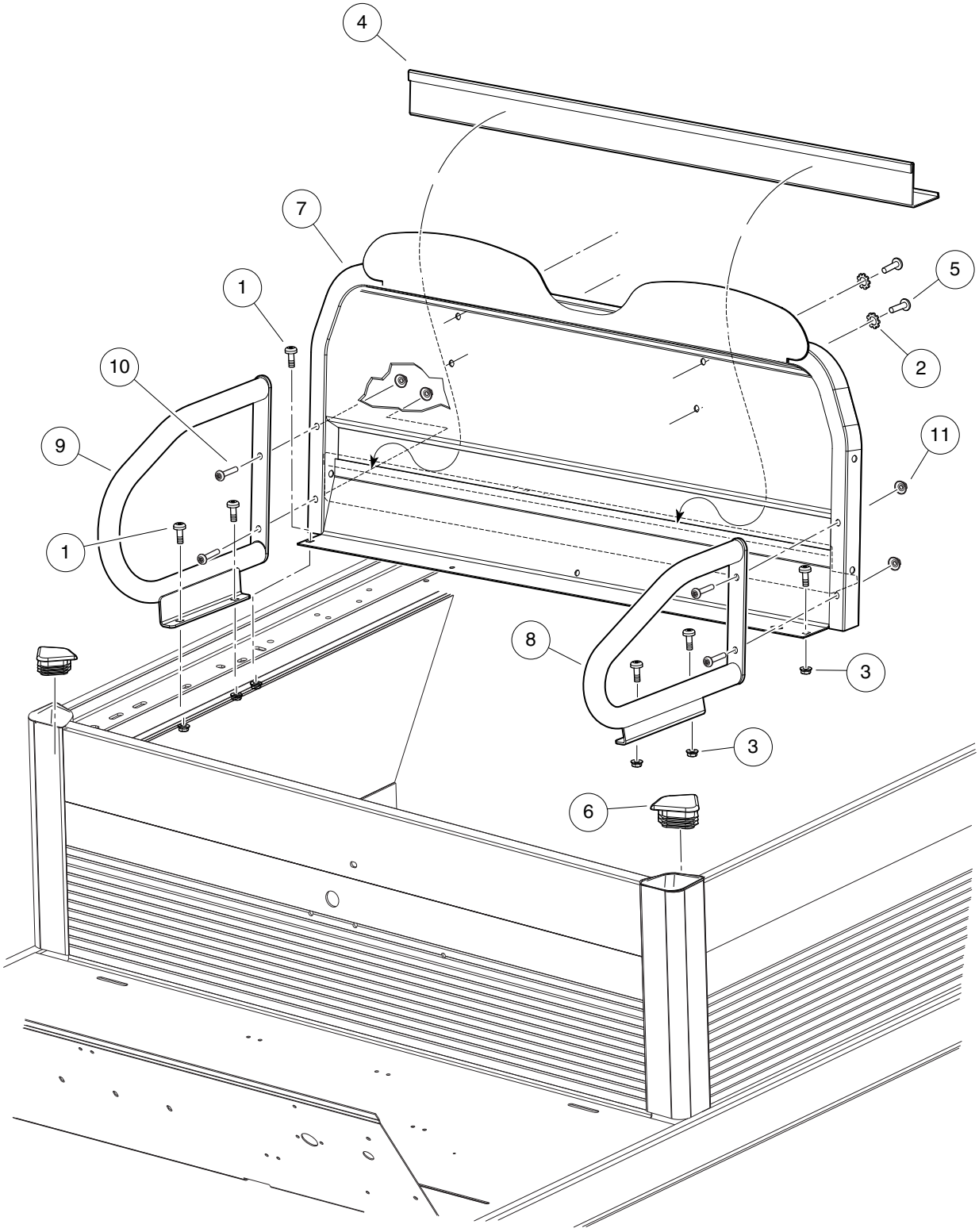
4
7
1
5
2
10
9
11
1
8
3
3
6
001161-003

SEAT FRAME AND HIP-RESTRAINT

ITEM	PART NO.	DESCRIPTION	QTY
		1 2 3 4	
1	1015399	Screw, 5/16-18 X 0.88 Torx Truss-Head	6
2	101946201	Washer, Lock, 0.250 External-Tooth	4
3	101963401	Locknut, 5/16-18 Hex Flange	6
4	102989501	Seal, Bed, 41-Inch	1
5	103487501	Screw, 1/4-20 X 1.0, Black	4
6	105006501	Cap, Corner, Frame	2
7	105062401	Seatback, Weldment, Ca	1
8	105063001	Wldmnt, Hip Restraint, Sml, Lh	1
9	105063002	Wldmnt, Hip Restraint, Lrg, Rh	1
10	105078401	Scrw, 5/16-18 X 1.75, Tr Tx Hd	4
11	105194301	Nut, 5/16-18, Conical Washer	4

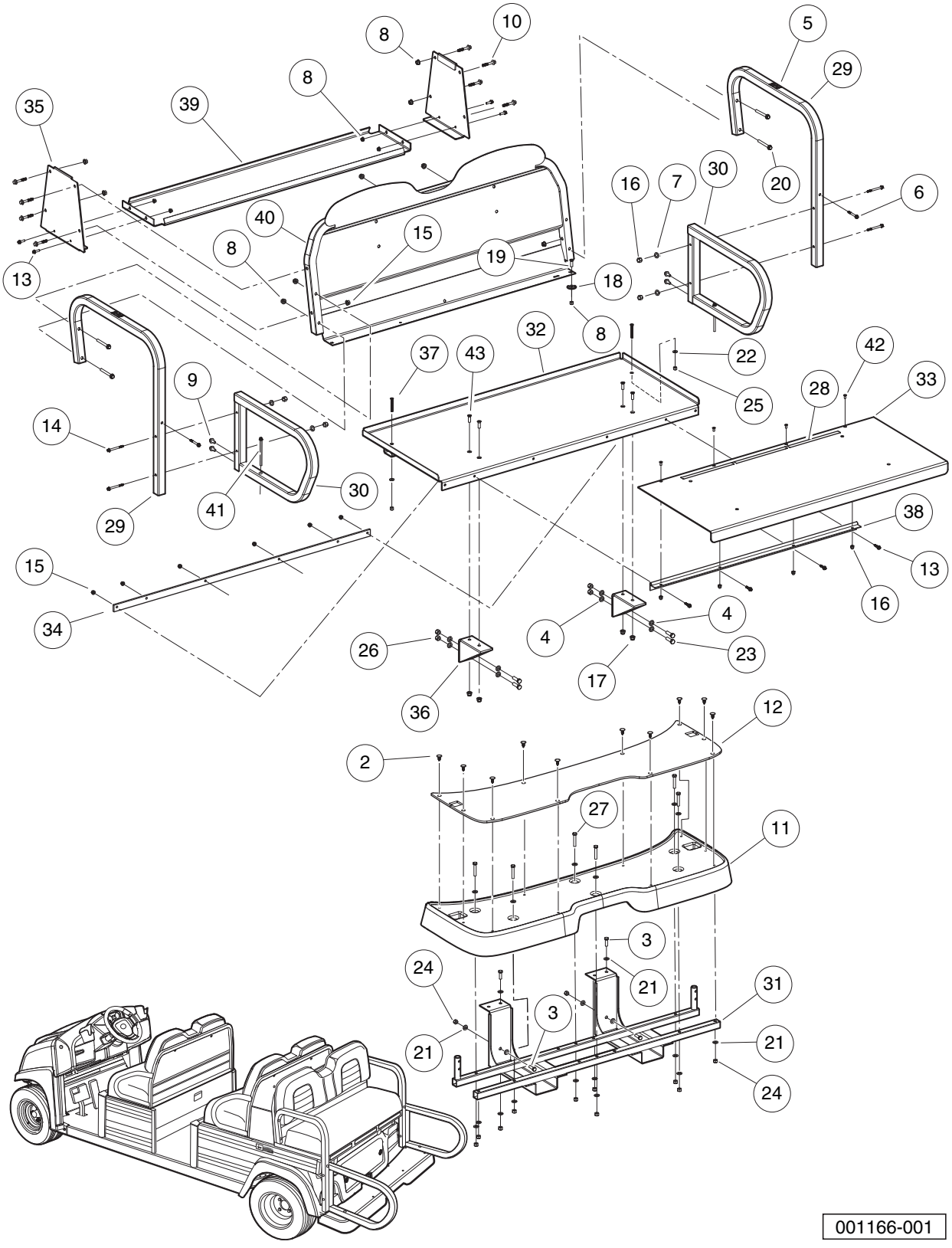
001166-001

REAR FACING FOLD DOWN SEAT

ITEM	PART NO.	DESCRIPTION	QTY
		1 2 3 4	
1	SVP777502	Kit, Fold Down, Ca500 (includes items 2 through 43)	1
2	1010434	Barrel - Plastic	10
3	1010934	Screw, 5/16-18 X 1.00 Hex Cap	4
4	1011990	Washer, 3/8 Flat	8
5	101609401	Decal, Crush Area Warning	2
6	102296150	Bolt - M6x1.0x50 Hex Flng Hd	2
7	102296301	Washer, M6x18x1.6 Flat	4
8	102298401	Nut, M8, All Metal Lock	14
9	102298720	Screw, M8-1.25x20, Taptite	4
10	102299550	Screw,m8x50,sems,tx,bttn,plt	8
11	102531402	Footdeck, 4-Passenger, Black	1
12	102531601	Floormat, 4-Passenger, Rear	1
13	102541401	Bolt-m6x1.0x20 Hex Flhd Blk-I	8
14	102541470	Bolt-m6x1.0x70 Hex Flhd, Blk-I	4
15	102541501	Nut-m6x1.0 Fl Mtl Lock,blk	12
16	102582401	Cap Nut M6, Sp	8
17	102618601	Lock Nut, Flange, M8 X 1.25 Nylon	4
18	103201101	Washer, Step, CVT Primary	2
19	103262201	Bolt Flg Blk, M8 X 25, Loctite	2
20	105188185	Bolt, M8 X 85mm, 10.9 Grade	4
21	1241	Washer, 5/16 Type A Flat	20
22	332	Washer, 1/4 Type A Narrow Flat	2
23	705	Screw, Cap-hex Hd 3/8-16x1.25	4
24	7473	Locknut, 5/16-18 Nylon Insert	10
25	8233	Locknut, 1/4-20, Nylon Insert	2
26	8754	Locknut, 3/8-16 Hex	4
27	8963	Screw, 5/16-18 X 1.75 Hex-Head Cap	6
28	SVP370901	Asm, Decal, Warn 800 850 Prec	1
29	SVP658101	Hip Restraint, Folddown, Ca	2
30	SVP658401	Asm, D-ring, Folddown, Ca	2
31	SVP658602	Wldmnt, Support, Foot Deck	1
32	SVP659001	Channel, Support, Panel, Fixed	1
33	SVP659101	Panel, Flip Folddown, Ca	1
34	SVP659301	Plate, Back, Hinge, Folddown	1
35	SVP659503	Wldmnt, Support, Fixed Panel	2
36	SVP664101	Screw, 1/4-20x2.0, Csfh, Ss	2
37	SVP713301	Hinge, 2 In Open X 25 In Long	1
38	SVP732202	Panel, Closeout, Folddown, Med	1
39	SVP732301	Panel, Supprt, Side, Seat, Med	2
40	SVP732901	Weldment, Seat Back, Fold Down	1
41	SVP736801	Screw, M6-1.0x100	2
42	SVPP229901	M6x1.0x12 Fl Hd Mach Scr Ss	4
43	SVPP234001	M8x1.25x25 Fl Hd Mach Scr	4

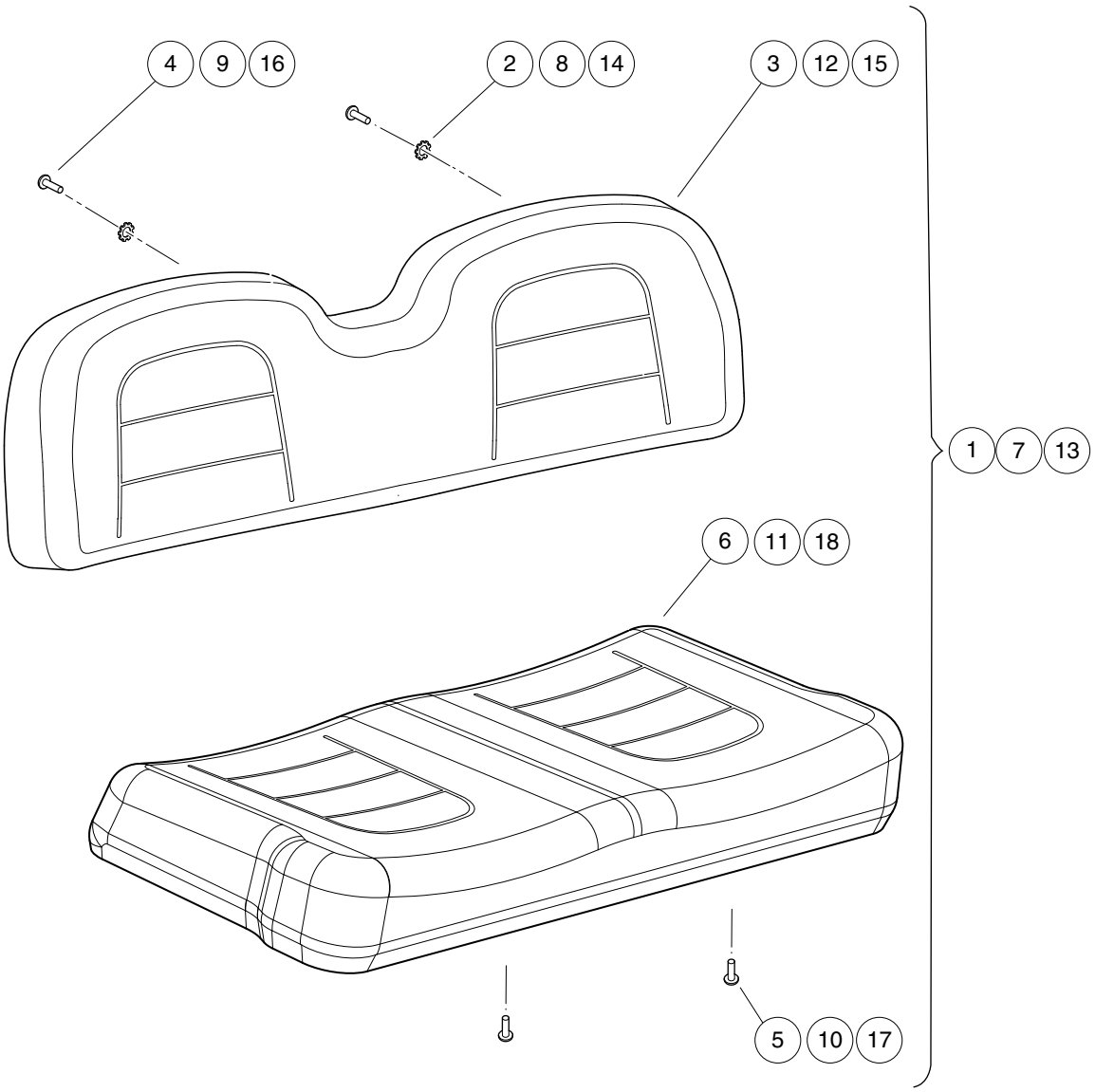

001300-025

REAR SEATS – VEHICLE WITH FOLD-DOWN REAR SEAT

ITEM	PART NO.	DESCRIPTION	QTY
		1 2 3 4	
1	SVP777401	Kit, Seats, Fold Down, Black (includes items 2 through 6)	1
2	101946201	Washer, Lock, 0.250 External-Tooth	4
3	105064102	Asm, Seatback, Black, Ca	1
4	8251	Screw, 1/4-20 X 1.0 Truss-Head Machine	4
5	SVP387901	1/4-20x1.00 Fl Hd Mach Scr Ss	4
6	SVP716903	Asm, Seat, Fold Down, Black	1
7	SVP777402	Kit, Seats, Fold Down, Beige (includes items 8 through 12)	1
8	101946201	Washer, Lock, 0.250 External-Tooth	4
9	8251	Screw, 1/4-20 X 1.0 Truss-Head Machine	4
10	SVP387901	1/4-20x1.00 Fl Hd Mach Scr Ss	4
11	SVP716905	Asm, Seat, Fold Down, Bge	1
12	SVP860101	Asm, Seatback, Biege, Ca	1
13	SVP777403	Kit, Seats, Fold Down, Gray (includes items 14 through 18)	1
14	101946201	Washer, Lock, 0.250 External-Tooth	4
15	105064103	Asm, Seatback, Gray, Ca	1
16	8251	Screw, 1/4-20 X 1.0 Truss-Head Machine	4
17	SVP387901	1/4-20x1.00 Fl Hd Mach Scr Ss	4
18	SVP716902	Asm, Seat, Fold Down, Gray	1

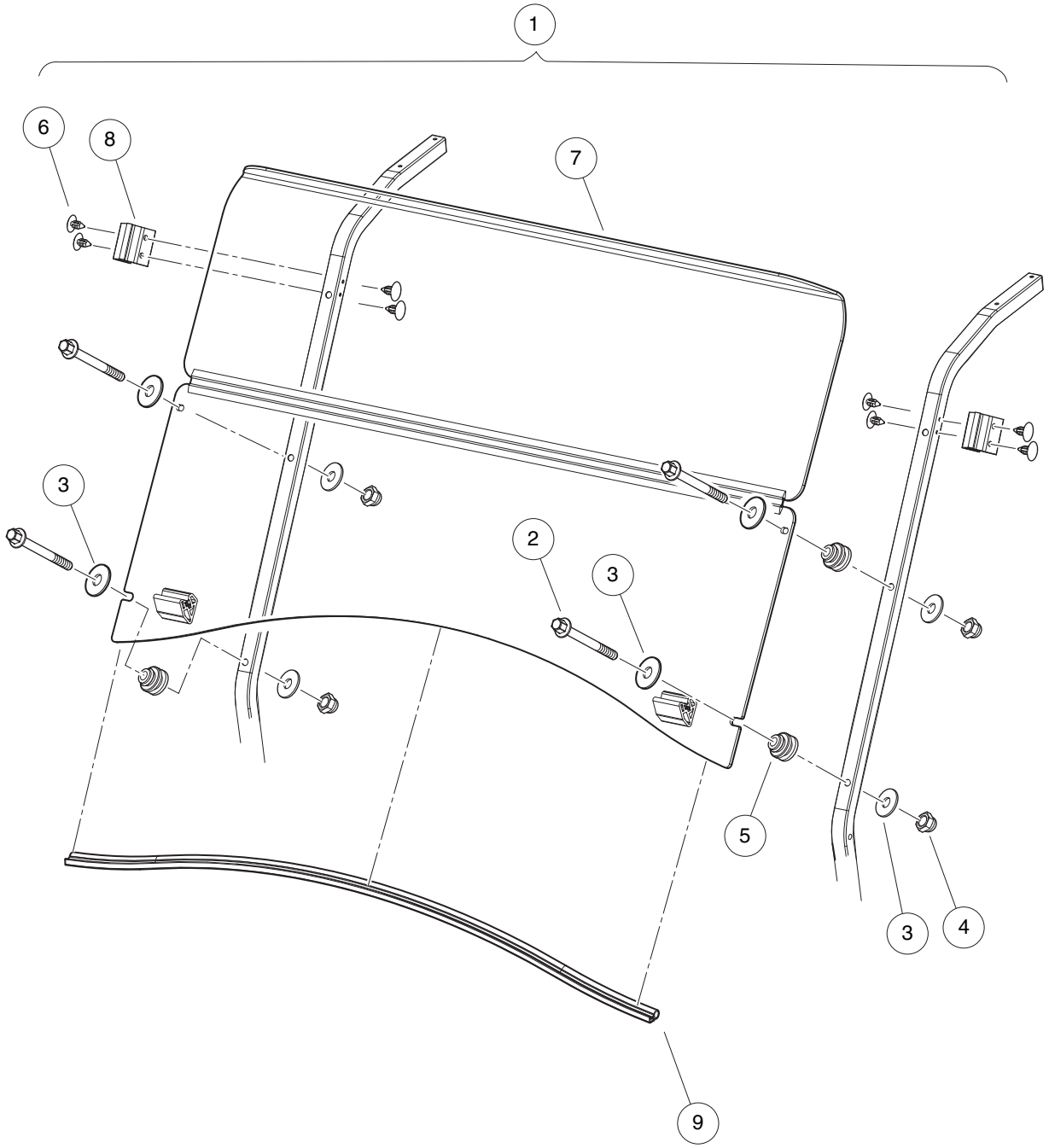

001114-001

WINDSHIELD, HINGED

ITEM	PART NO.	DESCRIPTION	QTY
		1 2 3 4	
1	105109101	Kit, Windshield, Hinged, Hb (includes items 2 through 9)	1
2	102296150	Bolt - M6x1.0x50 Hex Flng Hd	4
3	102296301	Washer, M6x18x1.6 Flat	4
4	102582401	Cap Nut M6, Sp	4
5	102947601	Grommet, Windshield, Prec	4
6	103754901	Fastener, Barrel - .610 X .25	8
7	105060901	Windshield, Hinged, Utility Hb	1
8	105069901	Clip, Retainer, W/s 1.25"	2
9	105196001	seal,windshield	1

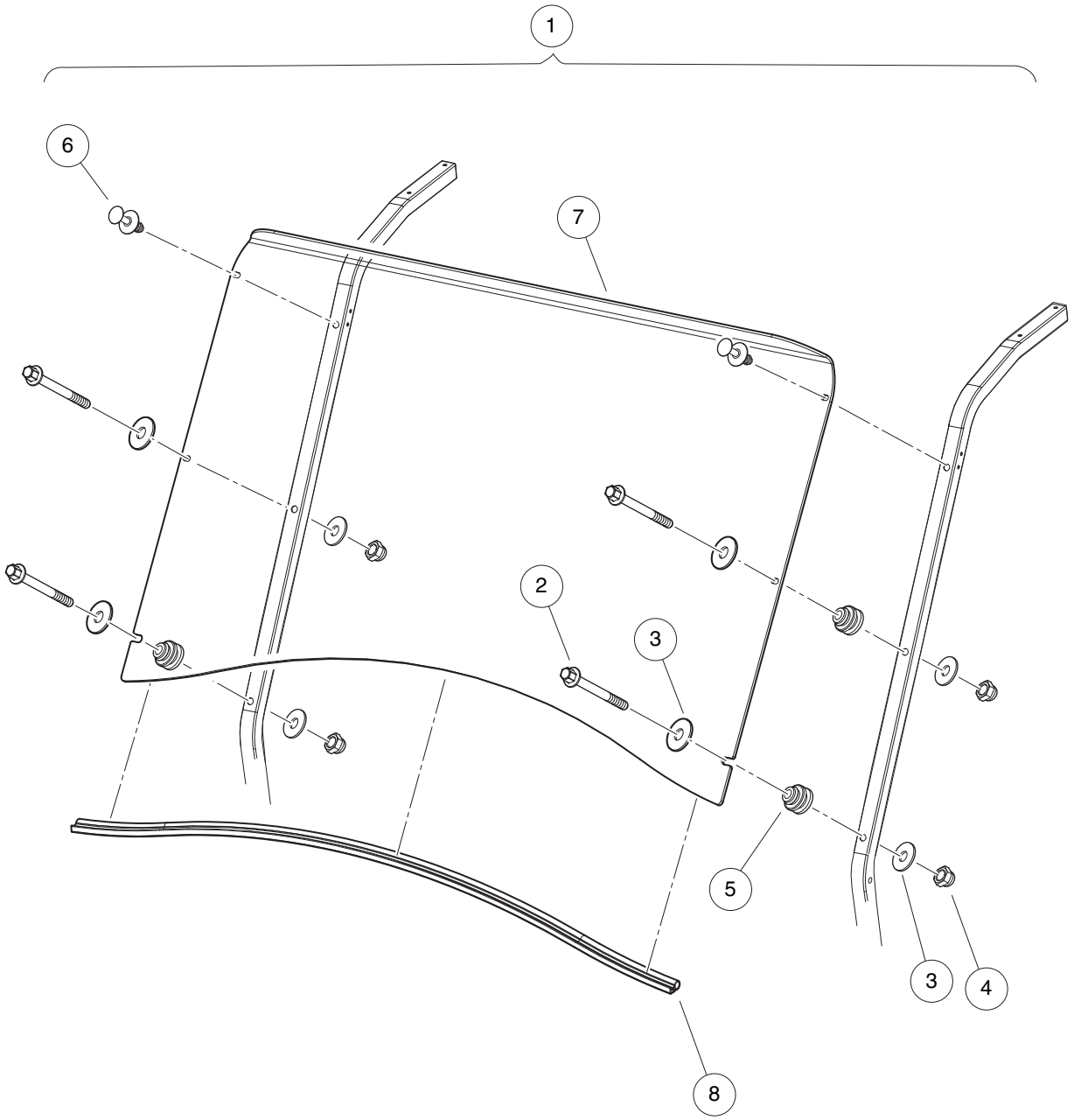

001115-001

WINDSHIELD, NON-HINGED

ITEM	PART NO.	DESCRIPTION	QTY
		1 2 3 4	
1	105109201	Kit, Windshield, Single, Hb (includes items 2 through 8)	1
2	102296150	Bolt - M6x1.0x50 Hex Flng Hd	4
3	102296301	Washer, M6x18x1.6 Flat	8
4	102582401	Cap Nut M6, Sp	4
5	102947601	Grommet, Windshield, Prec	4
6	105093501	Blind Rivet, Push, 3-10 Panel	2
7	105102301	Windshield, Single, Hb	1
8	105196001	seal,windshield	1

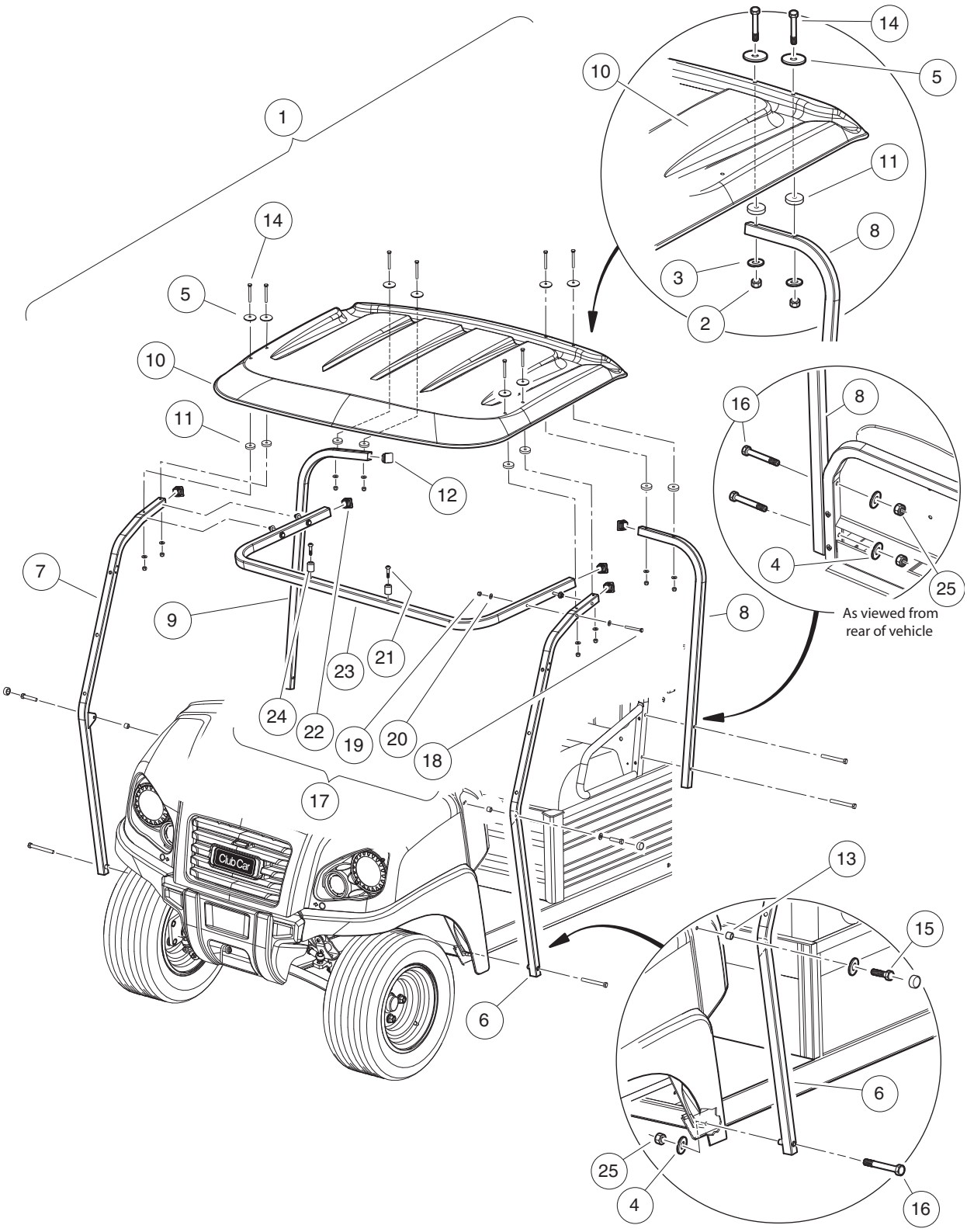
1
2
3
4
5
6
7
8
9
10
11
12
13
14
15
16
17
18
19
20
21
22
23
24
25
As viewed from rear of vehicle
001300-014

CANOPY KIT, WHITE

ITEM	PART NO.	DESCRIPTION	QTY
		1 2 3 4	
1	105063301	Kit, Canopy, Hb, White (includes items 2 through 25)	1
2	102242401	Nut - Nylon Insert W/cap	8
3	102296301	Washer, M6x18x1.6 Flat	8
4	102323501	Washer, Flat, 3/8, Blk Fin	6
5	103196001	Washer, Conical Spring, Canopy	8
6	105063201	Weldment, Strut, Ds, Hb	1
7	105063202	Weldment, Strut, Ps, Hb	1
8	105063401	Rear, Strut, Bent, Ds	1
9	105063402	Rear, Strut, Bent, Ps	1
10	105072001	Canopy, Short, Restyle, White	1
11	105086101	Spacer, Rubber,7.1i D-6.35 Thk	8
12	105092601	Plug, Square -31.75mm	4
13	105094001	Spacer, Canopy Support, Dash	2
14	105197301	1/4-20 x 2.25,BHCS,6-LOBE	8
15	105197401	BOLT,FLG,3/8-16 X 1.00 LOC	2
16	105197402	BOLT,FLG,3/8-16 X 3.00	6
17	105251901	Kit, Canopy Support, Front (includes items 18 through 24)	1
18	1012159	Bolt, 1/4-20 X 2.75 Hex-Head	4
19	102242401	Nut - Nylon Insert W/cap	4
20	102296301	Washer, M6x18x1.6 Flat	8
21	102557201	Screw, #6-20 Type Abx1.oo Pan	2
22	102581201	Plug, Square - 25.4 mm	2
23	105249901	Tube, Front Support, Canopy, Utility	1
24	105250501	Bumper, Rubber, 3/4-in. Round	2
25	8754	Locknut, 3/8-16 Hex	6

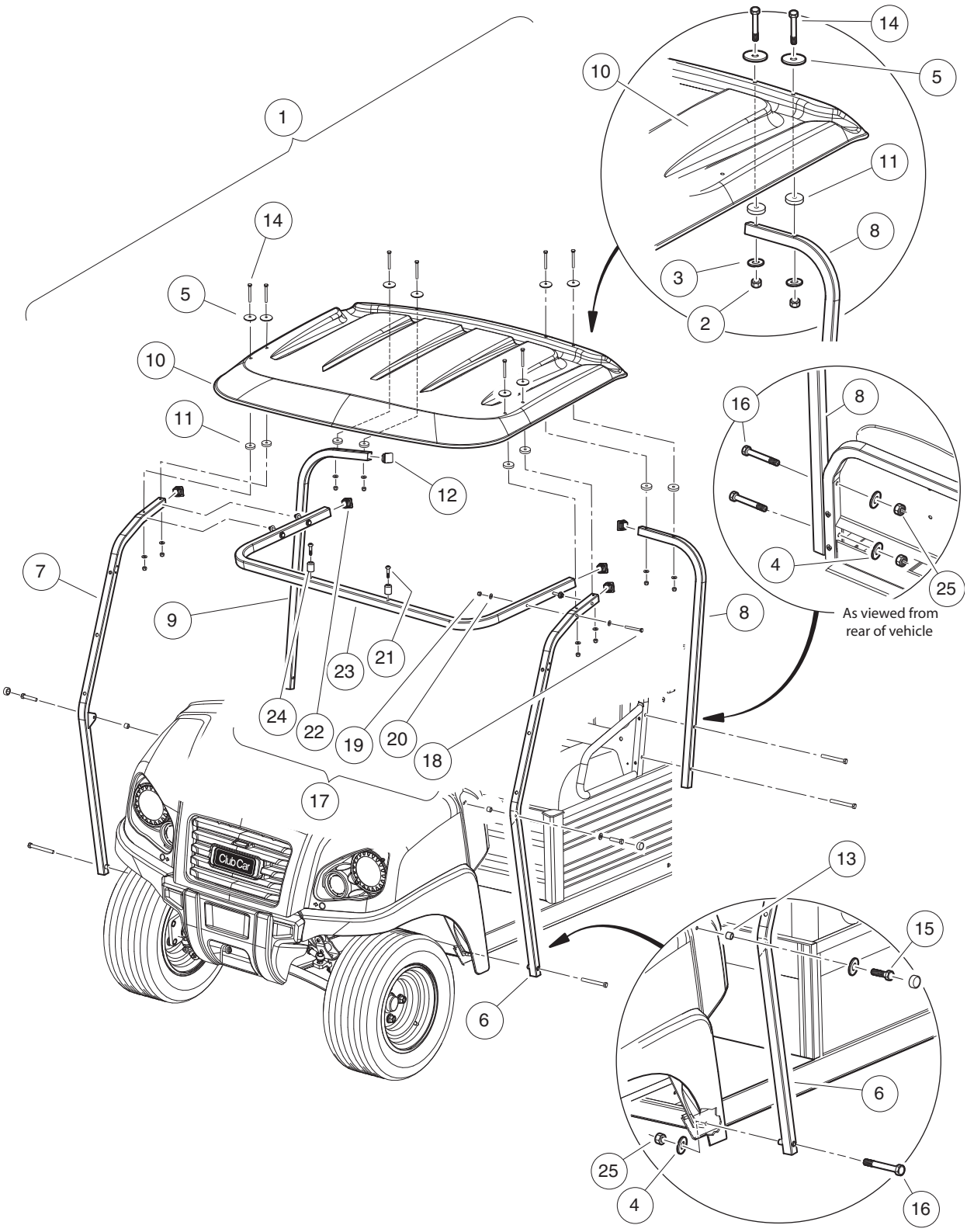
1
14
5
10
11
8
3
2
16
4
25
As viewed from
rear of vehicle
12
7
9
23
21
24
22
19
20
18
17
13
15
6
001300-014

CANOPY KIT, BIEGE

ITEM	PART NO.	DESCRIPTION	QTY
		1 2 3 4	
1	105063302	Kit, Canopy, Hb, Beige (includes items 2 through 25)	1
2	102242401	Nut - Nylon Insert W/cap	8
3	102296301	Washer, M6x18x1.6 Flat	8
4	102323501	Washer, Flat, 3/8, Blk Fin	6
5	103196001	Washer, Conical Spring, Canopy	8
6	105063201	Weldment, Strut, Ds, Hb	1
7	105063202	Weldment, Strut, Ps, Hb	1
8	105063401	Rear, Strut, Bent, Ds	1
9	105063402	Rear, Strut, Bent, Ps	1
10	105072002	Canopy, Short, Restyle, Beige	1
11	105086101	Spacer, Rubber,7.1i D-6.35 Thk	8
12	105092601	Plug, Square -31.75mm	8
13	105094001	Spacer, Canopy Support, Dash	4
14	105197301	1/4-20 x 2.25,BHCS,6-LOBE	8
15	105197401	BOLT,FLG,3/8-16 X 1.00 LOC	2
16	105197402	BOLT,FLG,3/8-16 X 3.00	6
17	105251901	Kit, Canopy Support, Front (includes items 18 through 24)	1
18	1012159	Bolt, 1/4-20 X 2.75 Hex-Head	4
19	102242401	Nut - Nylon Insert W/cap	4
20	102296301	Washer, M6x18x1.6 Flat	8
21	102557201	Screw, #6-20 Type Abx1.oo Pan	2
22	102581201	Plug, Square - 25.4 mm	2
23	105249901	Tube, Front Support, Canopy, Utility	1
24	105250501	Bumper, Rubber, 3/4-in. Round	2
25	8754	Locknut, 3/8-16 Hex	6

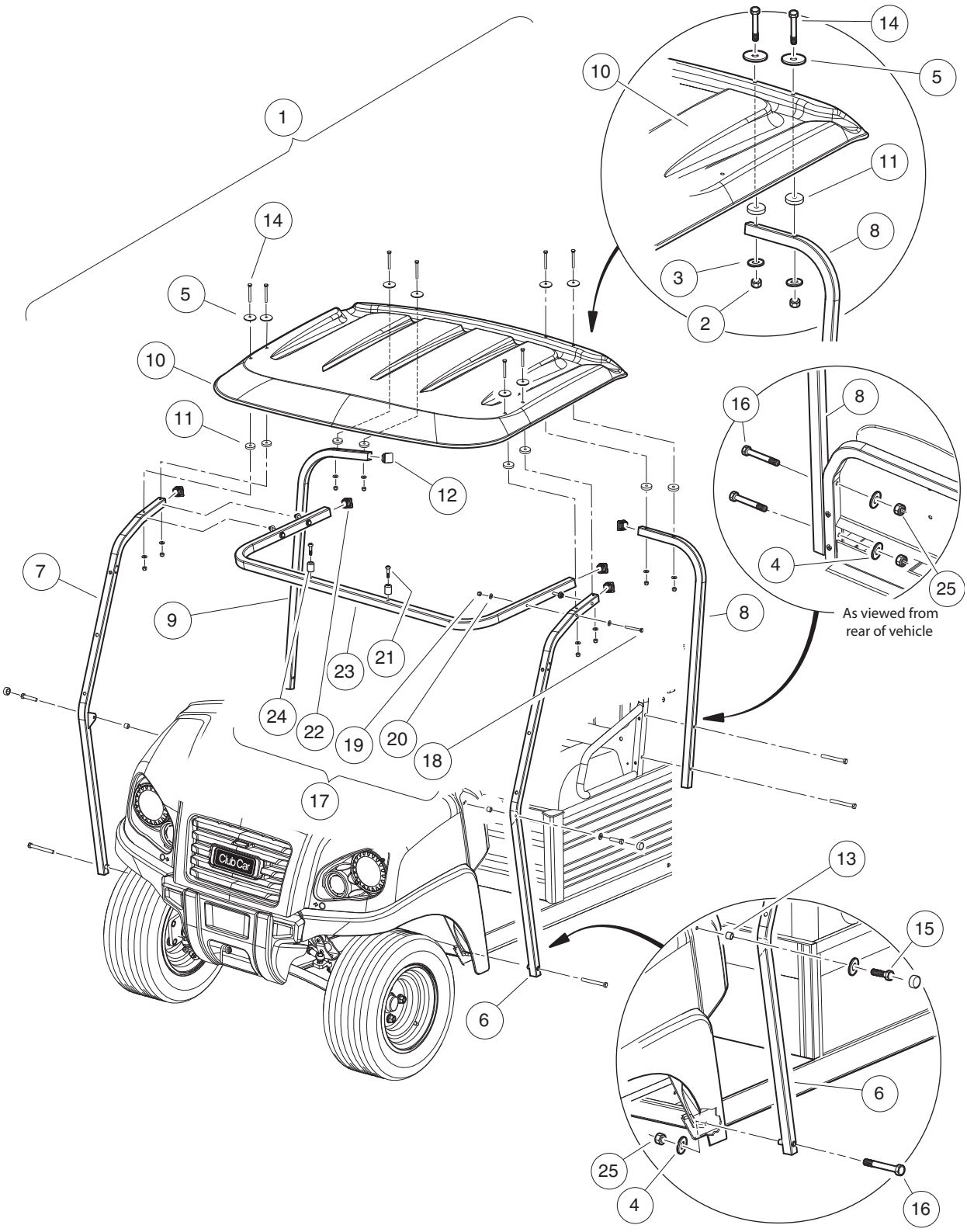
1
14
5
10
11
8
3
2
16
4
25
As viewed from
rear of vehicle
12
7
9
23
21
24
22
19
20
18
17
13
15
6
001300-014

CANOPY KIT, BLACK

ITEM	PART NO.	DESCRIPTION	QTY
		1 2 3 4	
1	105063303	Kit, Canopy, Hb, Black (includes items 2 through 25)	1
2	102242401	Nut - Nylon Insert W/cap	8
3	102296301	Washer, M6x18x1.6 Flat	8
4	102323501	Washer, Flat, 3/8, Blk Fin	6
5	103196001	Washer, Conical Spring, Canopy	8
6	105063201	Weldment, Strut, Ds, Hb	1
7	105063202	Weldment, Strut, Ps, Hb	1
8	105063401	Rear, Strut, Bent, Ds	1
9	105063402	Rear, Strut, Bent, Ps	1
10	105072003	Canopy, Short, Restyle, Blk	1
11	105086101	Spacer, Rubber,7.1i D-6.35 Thk	8
12	105092601	Plug, Square -31.75mm	4
13	105094001	Spacer, Canopy Support, Dash	2
14	105197301	1/4-20 x 2.25,BHCS,6-LOBE	8
15	105197401	BOLT,FLG,3/8-16 X 1.00 LOC	2
16	105197402	BOLT,FLG,3/8-16 X 3.00	6
17	105251901	Kit, Canopy Support, Front (includes items 18 through 24)	1
18	1012159	Bolt, 1/4-20 X 2.75 Hex-Head	4
19	102242401	Nut - Nylon Insert W/cap	4
20	102296301	Washer, M6x18x1.6 Flat	8
21	102557201	Screw, #6-20 Type Abx1.oo Pan	2
22	102581201	Plug, Square - 25.4 mm	2
23	105249901	Tube, Front Support, Canopy, Utility	1
24	105250501	Bumper, Rubber, 3/4-in. Round	2
25	8754	Locknut, 3/8-16 Hex	6

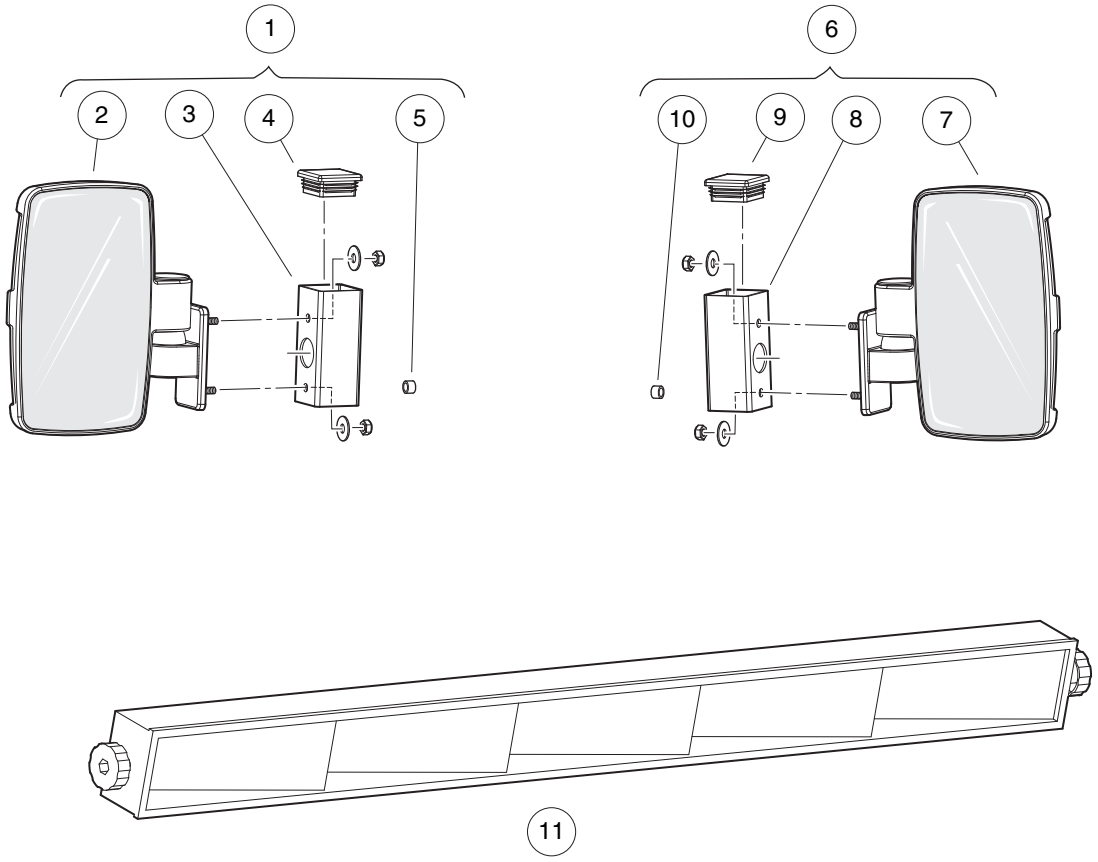

001300-019

ITEM	PART NO.	DESCRIPTION	QTY
		1 2 3 4	
1	105124201	Kit, Mirror, Hb, Res, Ds (includes items 2 through 5)	1
2	105128801	Asm, Mirror, Utl Res, Ds	1
3	105128901	Tube, Mirror, Support	1
4	105129001	Plug, Square 38.1 Mm	1
5	105170101	Spacer, M6, Plastic	1
6	105124202	Kit, Mirror, Hb, Res, Ps (includes items 7 through 10)	1
7	105128802	Asm, Mirror, Utl Res, Ps	1
8	105128901	Tube, Mirror, Support	1
9	105129001	Plug, Square 38.1 Mm	1
10	105170101	Spacer, M6, Plastic	1
11	105288801	Kit, Mirror, 5 Panel, Canopy	1

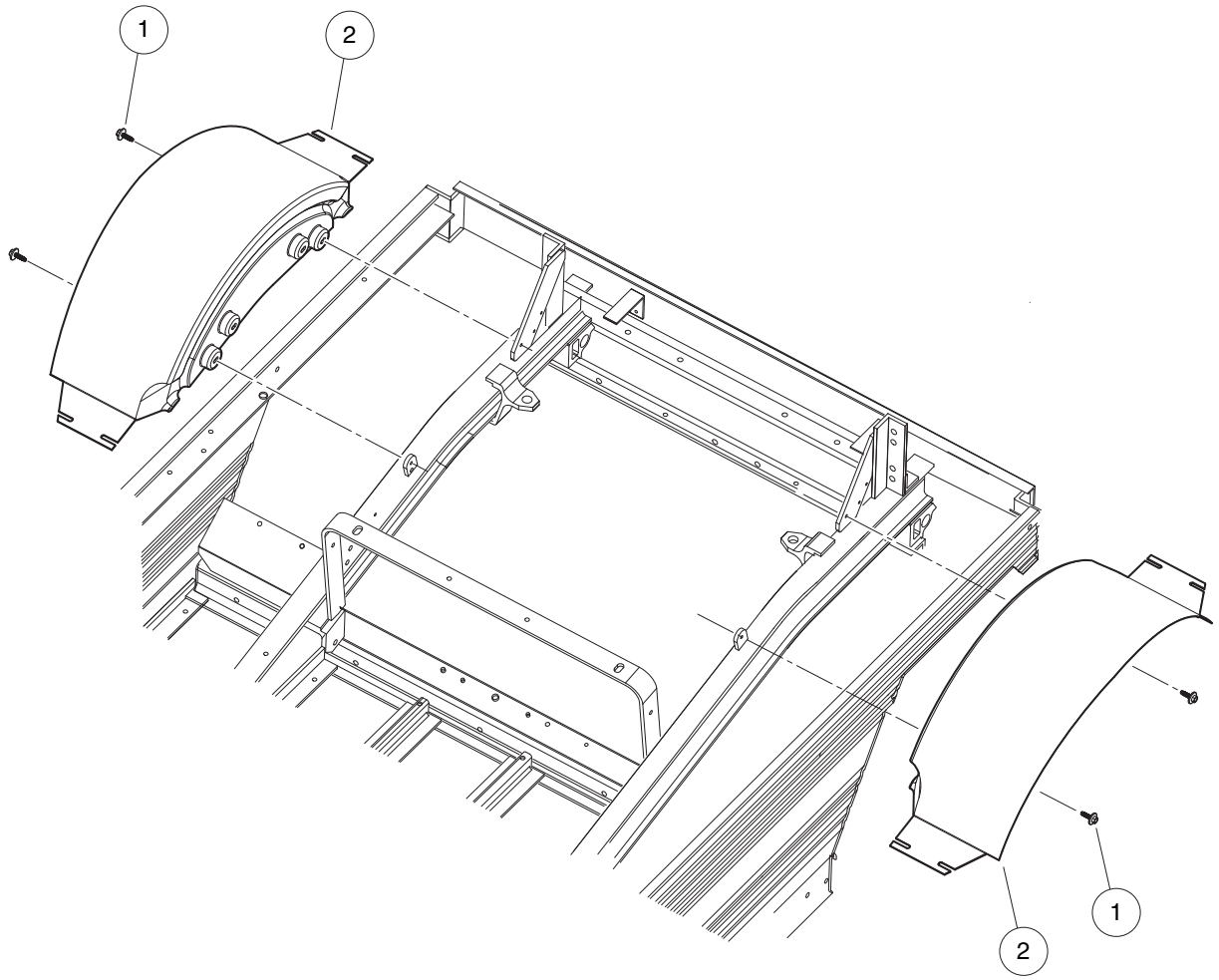

001123-001

INNER REAR FENDERS

ITEM	PART NO.	DESCRIPTION	QTY
		1 2 3 4	
1	102297125	Screw, M6-1.0x25.4, Thread-Forming, SEMS	4
2	105035801	Fender, Inner, Ca	2

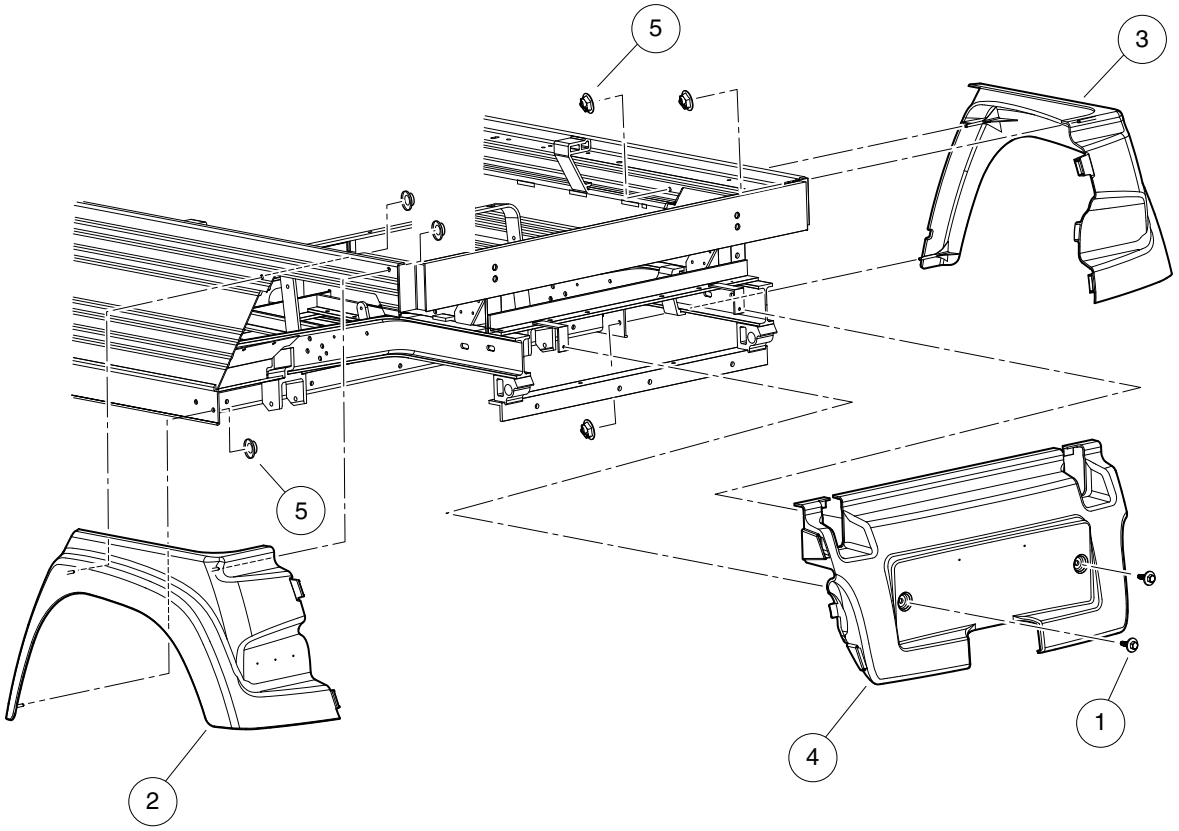

001124-001

REAR FENDERS AND TAIL SKIRT

ITEM	PART NO.	DESCRIPTION	QTY
		1 2 3 4	
1	102297125	Screw, M6-1.0x25.4, Thread-Forming, SEMS	2
2	105035101	Fender, Rear, Lh, Ca	1
3	105035201	Fender, Rear, Rh, Ca	1
4	105035301	Tailskirt, Ca	1
5	105066401	Nut, Self Thread, 5x10x15	6

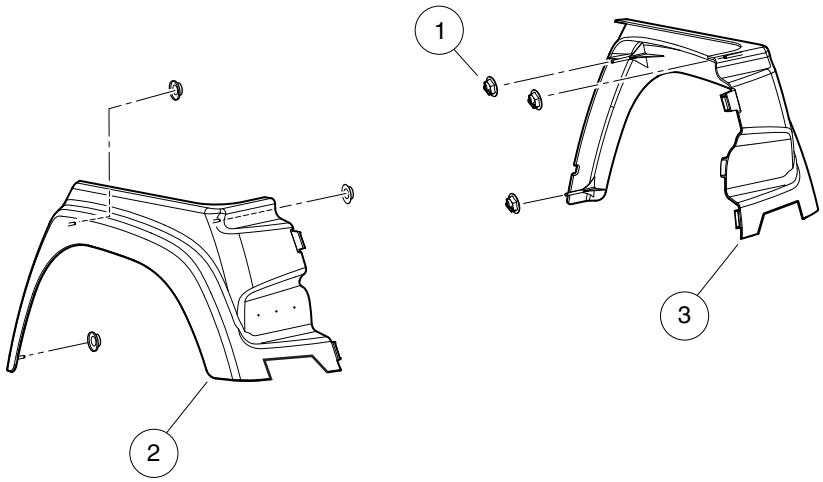

001125-001

REAR FENDERS – VEHICLE WITH FOLD-DOWN REAR SEAT

ITEM	PART NO.	DESCRIPTION	QTY
		1 2 3 4	
1	105066401	Nut, Self Thread, 5x10x15	6
2	SVP826501	Fender Lh W Fold Down Seat Ca	1
3	SVP826502	Fender Rh W Fold Down Seat Ca	1

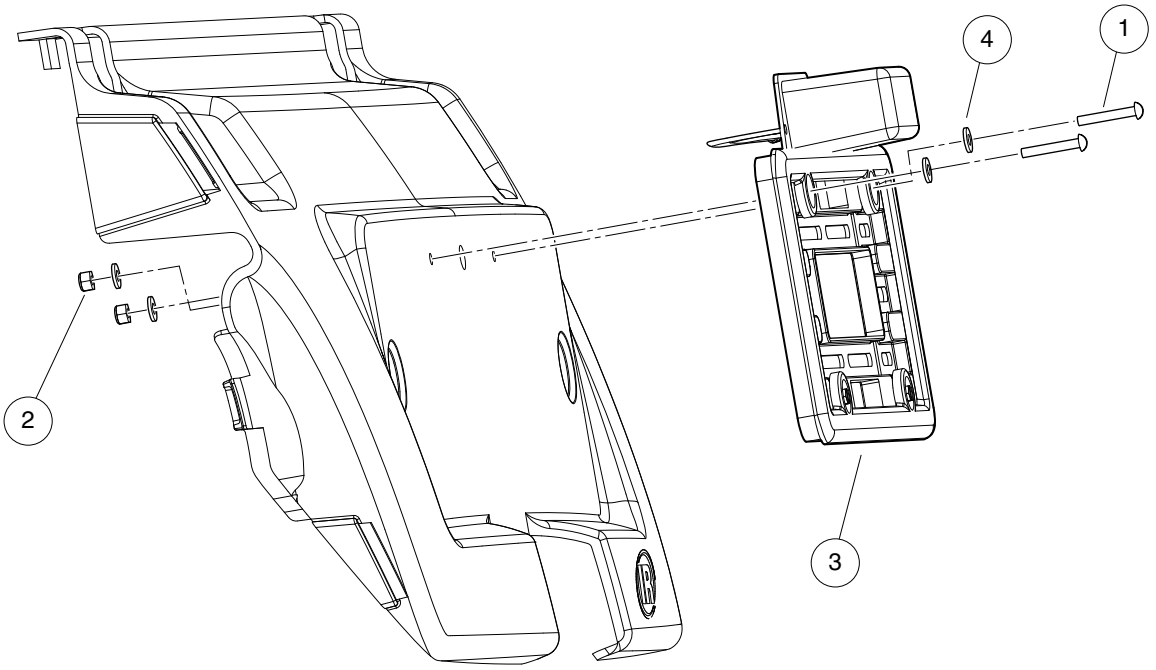

001170-001

REAR LICENSE PLATE HOLDER

ITEM	PART NO.	DESCRIPTION	QTY
		1 2 3 4	
1	1010909	Screw, #10-32 X 1.25 Rd Hd Mch	2
2	1013061	Locknut, #10-32 Nylon Insert	2
3	N/A	License Plate,ASM, Rear	1
4	183	Washer, #10, Type A, Flat	4

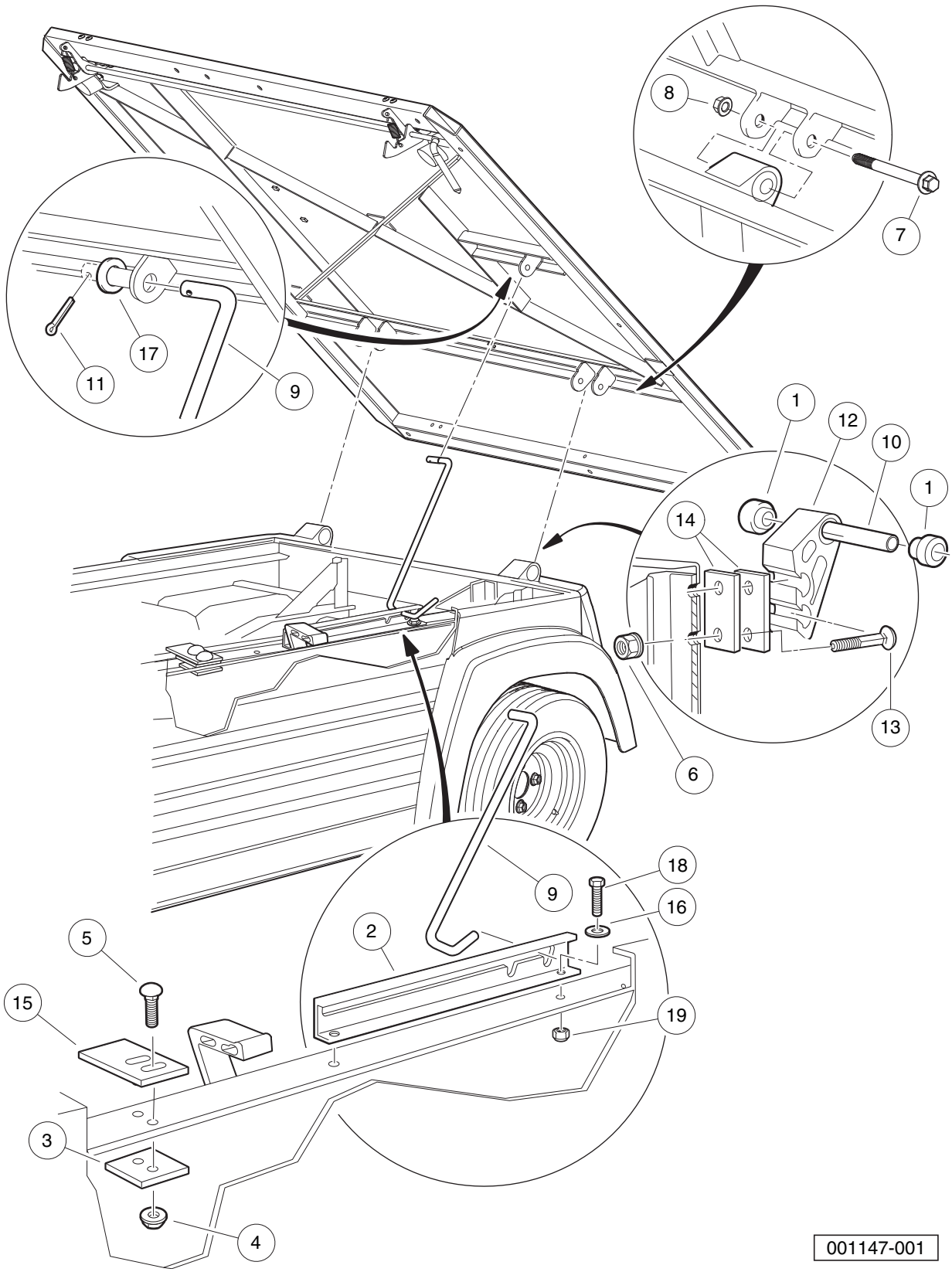
8
7
17
11
9
1
12
10
1
14
13
6
18
9
16
2
5
15
19
3
4
001147-001

BED HINGE, LATCH, AND PROP ROD – MEDIUM

ITEM	PART NO.	DESCRIPTION	QTY
		1 2 3 4	
1	1015583	Bushing, Urethane	4
2	1015700	Track Prop Rod Ca Ii	1
3	1016060	Plate, Latch Support	2
4	101835601	Locknut, 1/4-20 Hex Whiz	4
5	101958602	Bolt, Carriage, 1/4-20 X 1.0	4
6	102065901	Locknut, 3/8-16 Flanged Dimple	4
7	102298185	Bolt - Flange Hd, M8 X 85.0	2
8	102298401	Nut,m8,all Metal Lock	2
9	102301401	Rod, Prop	1
10	102506401	Sleeve - Spring Eye Mounts	2
11	1035	Cotter Pin, 3/32 x 1	1
12	103538701	Bracket, Bed Hinge, Extruded	2
13	103539001	3/8-16 X 1.25 Carr Blt Gr5 Zn	4
14	103575801	Shim, Bed Hinge, .125 Thick	4
15	105110801	Plate, Latch, Ca	2
16	332	Washer, 1/4 Type A Narrow Flat	2
17	334	Washer, 3/8, Type A, Flat	1
18	7479	Screw, 1/4-20 X 1.25 Hex-Head Cap	2
19	8233	Locknut, 1/4-20, Nylon Insert	2

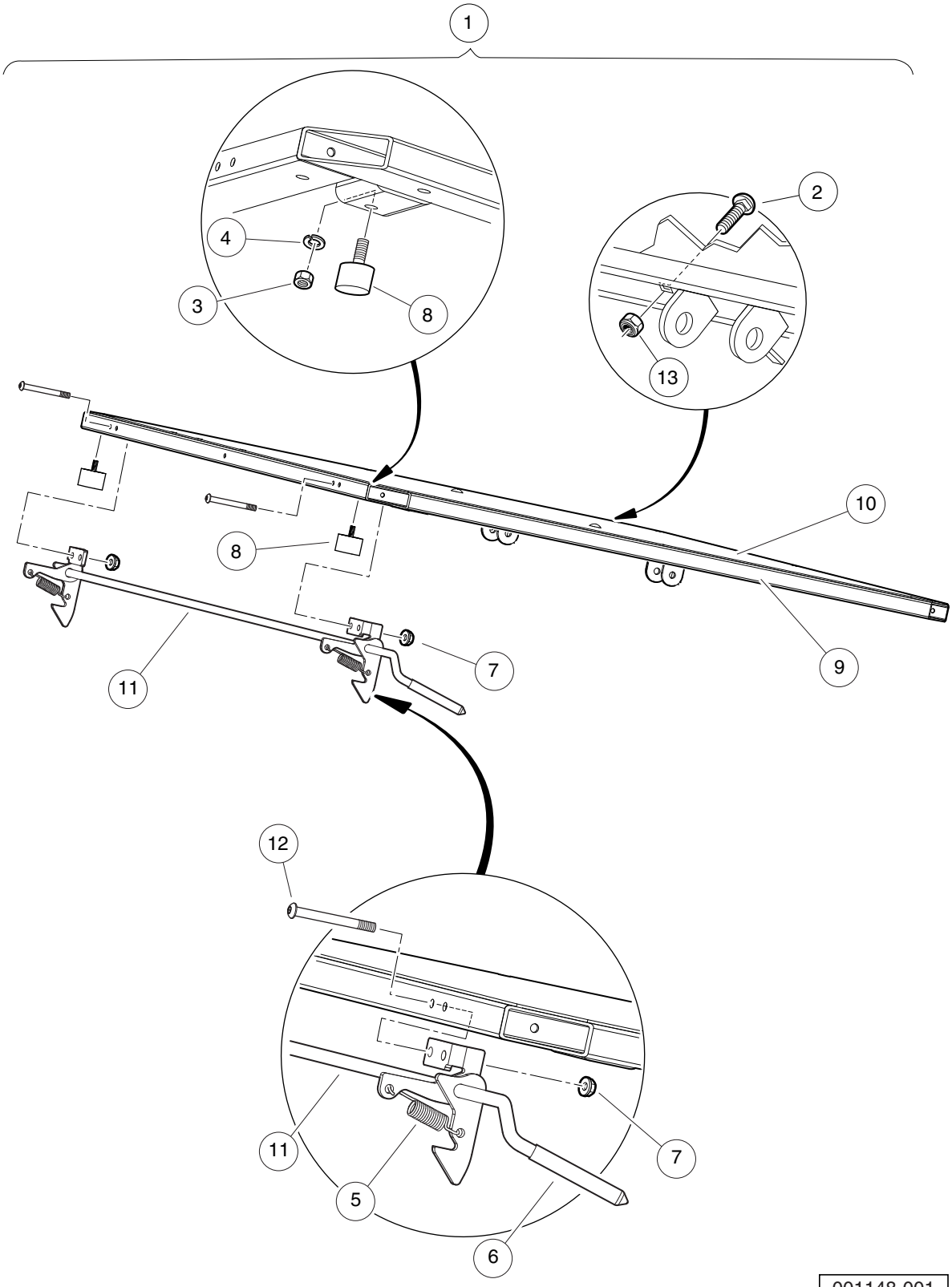
1
2
3
4
5
6
7
8
9
10
11
12
13
001148-001

TILT BED AND BED LATCH – MEDIUM

ITEM	PART NO.	DESCRIPTION	QTY
		1 2 3 4	
1	105197101	Kit, Bed Floor, Med (includes items 2 through 13)	1
2	101043502	Bolt,Carriage,5/16-18x1 blk	4
3	1012528	Nut, M8-1.25 Hex	2
4	1013734	Lockwasher, 8mm Split	2
5	1015391	Extension, Spring Latch	2
6	1015400	Grip, Tilt Latch Hand	1
7	1015661	Nut, Lock Hx Flanged 1/4-20	4
8	105036601	Bumper, Bedfloor, Ca	2
9	N/A	Frame, Weldmnt, Bed, Medium	1
10	N/A	Plate,Floor,Bed,Rhino,Med	1
11	105169101	Weldment,Bed Latch,CA	1
12	105194101	1/4-20 X 2.5, Bhcs, 6-lobe	1
13	7473	Locknut, 5/16-18 Nylon Insert	4

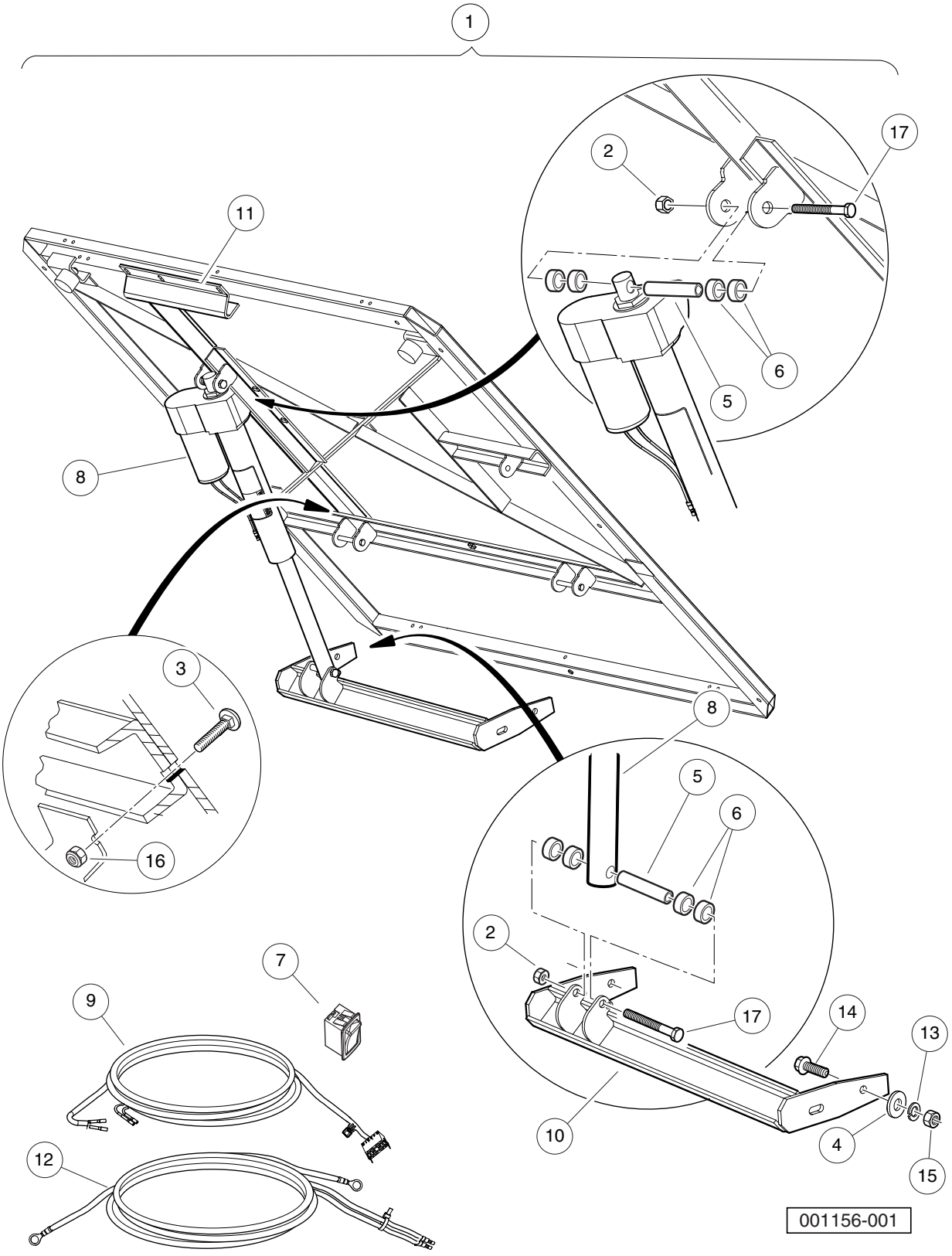
1
2
17
11
6
5
8
3
8
16
5
6
2
7
9
17
14
13
12
10
4
15
001156-001

ELECTRIC BED LIFT – MEDIUM, ELECTRIC VEHICLES

ITEM	PART NO.	DESCRIPTION	QTY
		1 2 3 4	
1	105170301	Kit, Bed Lift, Elec, Med (includes items 2 through 17)	1
2	1010138	Locknut, 3/8-16 Dimpled	2
3	101043502	Bolt,Carriage,5/16-18x1 blk	1
4	1011990	Washer, 3/8 Flat	4
5	1016603	Bushing, Long	2
6	1017774	Body Spacer	8
7	102882501	Switch, Rocker, Bed Lift	1
8	103951802	Actuator, Bed Lift, Elec, 48v	1
9	105108901	Harness, Bed Lift, Util	1
10	105131001	Weldment, Mnt, Bed Lift, Ca	1
11	105193501	Weldment, Bed Lift, Med	1
12	105197601	Asm, Jumper, Bedlift, Ca500	1
13	357	Lockwasher, 3/8 Split	4
14	705	Screw, Cap-hex Hd 3/8-16x1.25	4
15	706	Nut, Hex 3/8-16	4
16	7473	Locknut, 5/16-18 Nylon Insert	1
17	7561	Bolt, 3/8-16 X 3.00 Hex Head	2

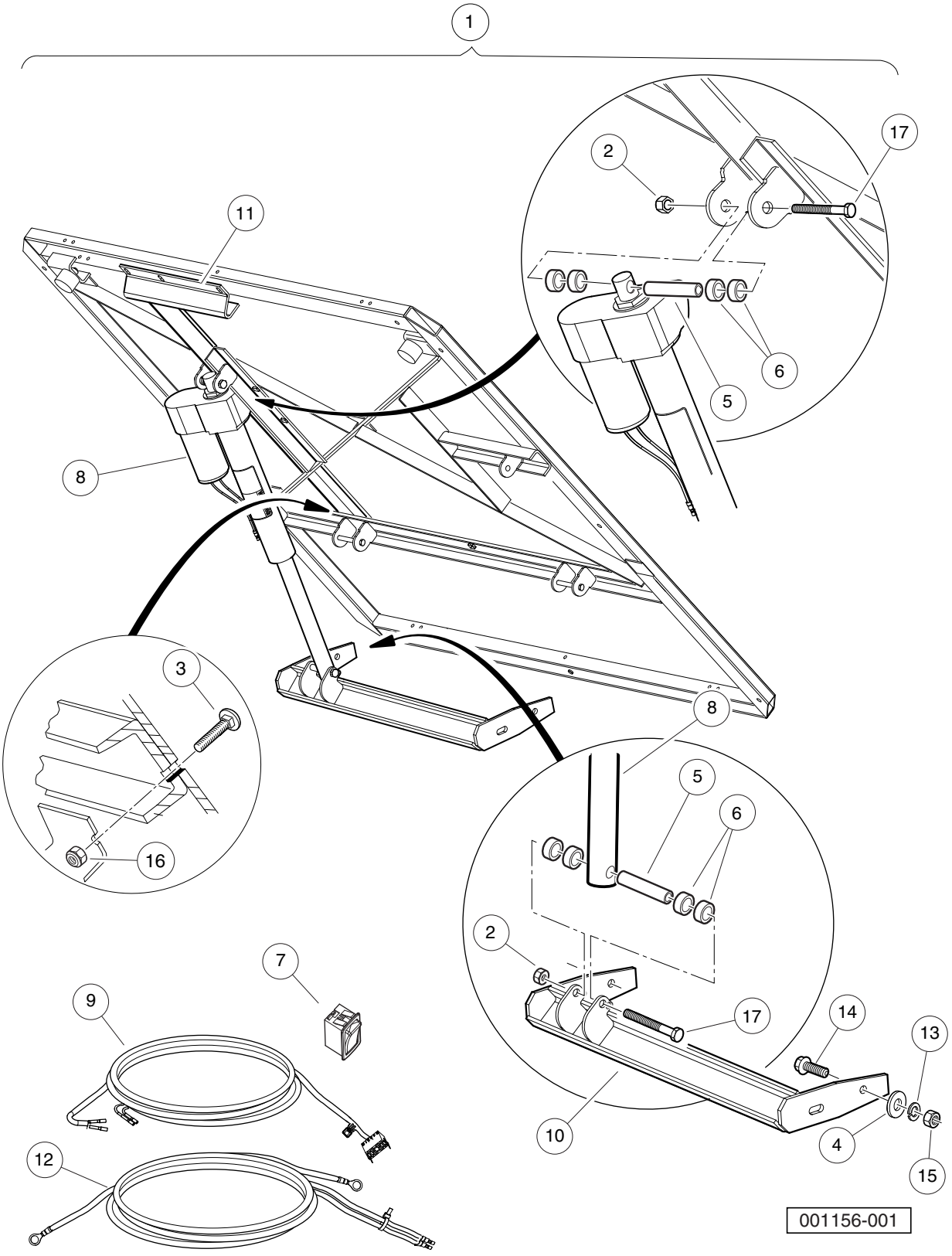
1
2
17
11
6
5
8
3
8
16
5
6
2
7
9
17
14
13
10
4
15
12
001156-001

ELECTRIC BED LIFT – GASOLINE VEHICLES

ITEM	PART NO.	DESCRIPTION	QTY
		1 2 3 4	
1	105170501	Kit, Bed Lift, Gas, Med (includes items 2 through 17)	1
2	1010138	Locknut, 3/8-16 Dimpled	2
3	101043502	Bolt,Carriage,5/16-18x1 blk	1
4	1011990	Washer, 3/8 Flat	4
5	1016603	Bushing, Long	2
6	1017774	Body Spacer	8
7	102882501	Switch, Rocker, Bed Lift	1
8	103951801	Actuator, Bed Lift, Electric	1
9	105108901	Harness, Bed Lift, Util	1
10	105131001	Weldment, Mnt, Bed Lift, Ca	1
11	105193501	Weldment, Bed Lift, Med	1
12	105197601	Asm, Jumper, Bedlift, Ca500	1
13	357	Lockwasher, 3/8 Split	4
14	705	Screw, Cap-hex Hd 3/8-16x1.25	4
15	706	Nut, Hex 3/8-16	4
16	7473	Locknut, 5/16-18 Nylon Insert	1
17	7561	Bolt, 3/8-16 X 3.00 Hex Head	2

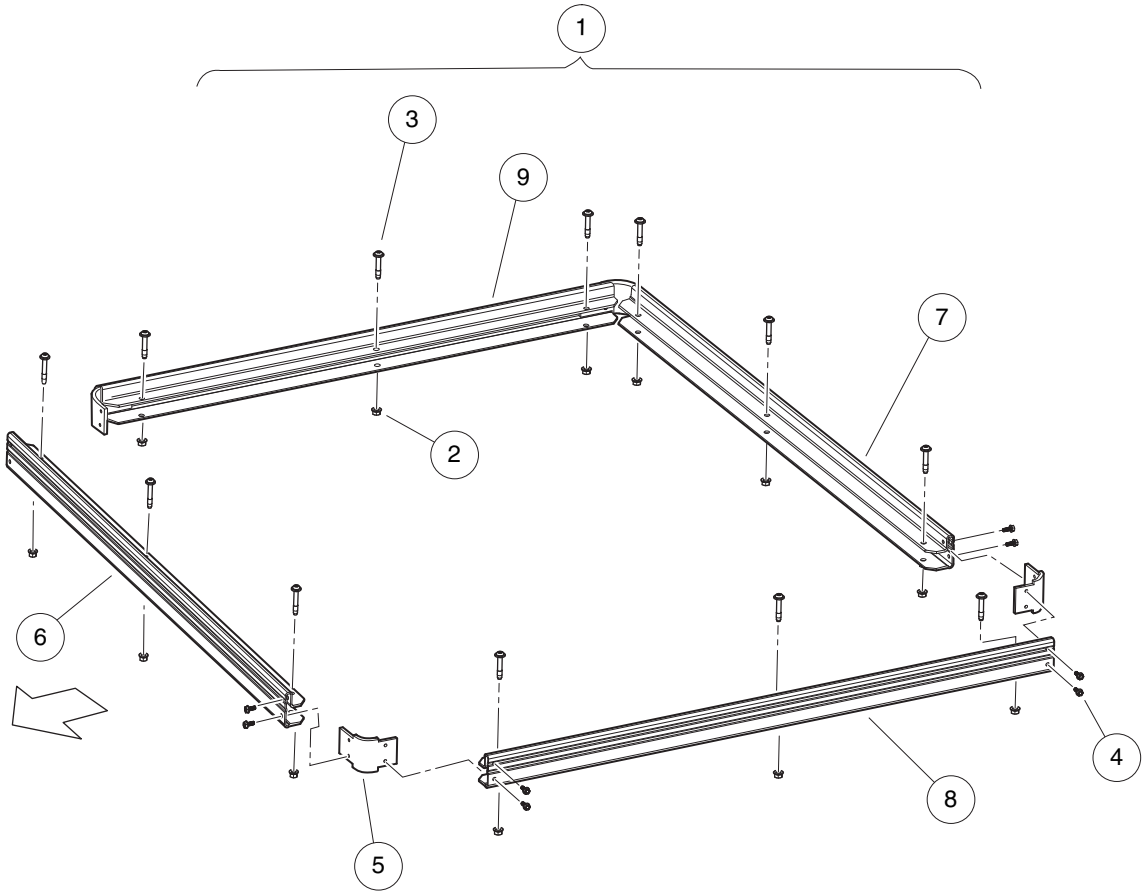

001126-001

FLAT BED TRIM – MEDIUM

ITEM	PART NO.	DESCRIPTION	QTY
		1 2 3 4	
1	105122205	Kit, Flat Trim, Ca, Med (includes items 2 through 9)	1
2	102298401	Nut,m8,all Metal Lock	12
3	102299550	Screw,m8x50,sems,tx,bttn,plt	12
4	105185701	Pan Head Screw, M6 X 16 Tt	16
5	105185801	Bracket,Bed Corner,CA	4
6	105194801	Trim, Bed, Cntr, Front	1
7	105194802	Trim, Bed, Cntr, Rear	1
8	105194901	Trim, Bed, Medium, Lh	1
9	105194902	Trim, Bed, Medium, Rh	1

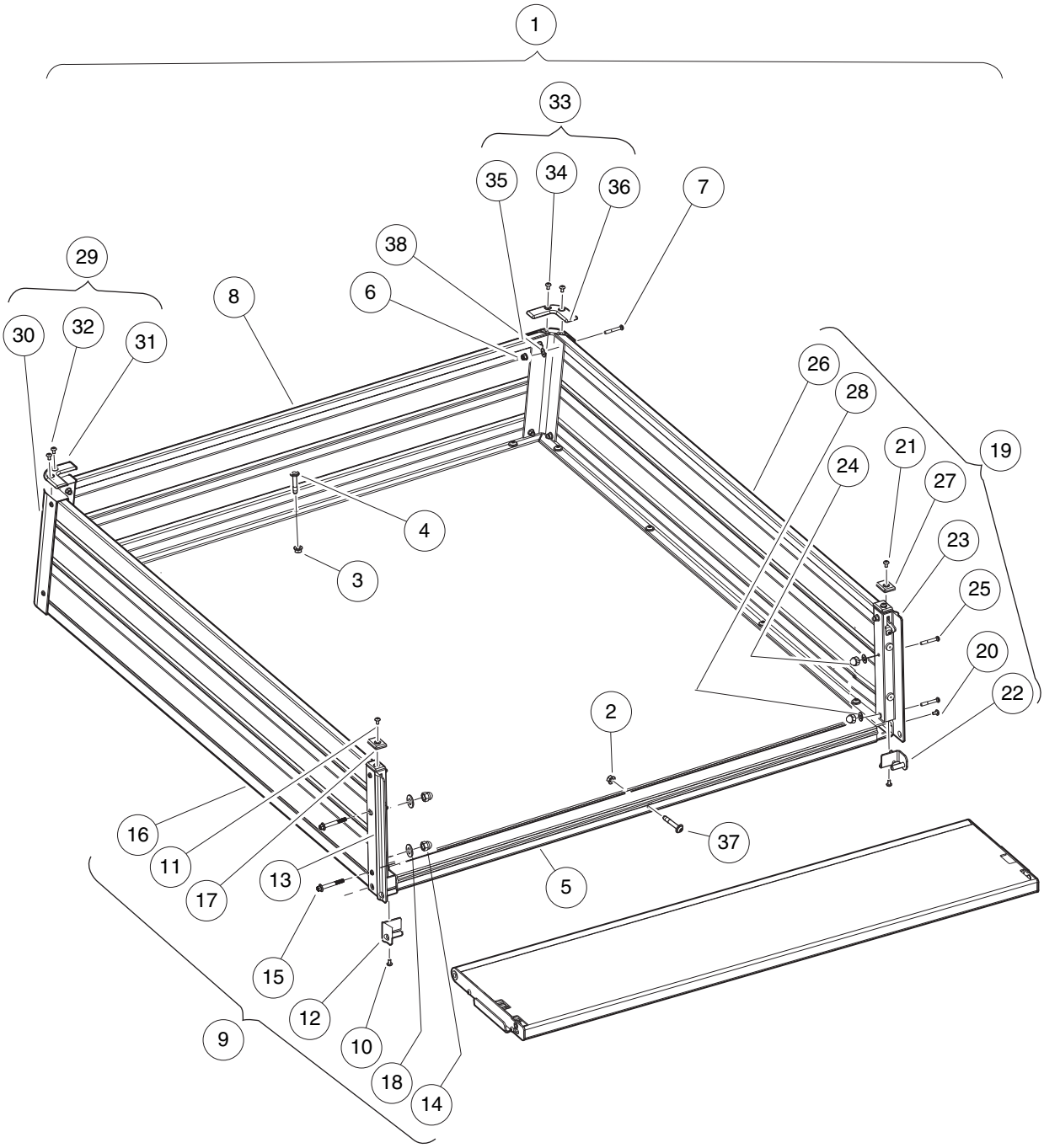
1
33
35
34
36
7
38
29
8
6
30
32
31
26
28
21
19
24
27
4
23
3
25
20
22
2
16
37
11
13
17
5
15
12
9
10
18
14

001136-002

CARGO BOX KIT – MEDIUM (PAGE 1 OF 2)

ITEM	PART NO.	DESCRIPTION	QTY
		1 2 3 4	
1	105122105	Kit, Cargo Box,Med (includes items 2 through 38)	1
2	1015661	Nut, Lock Hx Flanged 1/4-20	3
3	102298401	Nut,m8,all Metal Lock	9
4	102299550	Screw,m8x50,sems,tx,bttn,plt	9
5	105192301	Extr, Bed, Cargo, Rear	1
6	105192901	Nut, Acorn, M6, Lock, Silver	8
7	105193001	Screw, 6 Lobe, M6 X 35	8
8	105194601	Panel, Cargo Box, Frt	1
9	105200702	Asm,Cargo Box,Side Panel,DS,Medium (includes items 10 through 18)	1
10	1014321	Screw, #10 Truss-Head Torx	2
11	105127201	Weldment, Pivot, Tailgate, Lh	1
12	105127401	Asm, Latch, Tailgate, Lh	1
13	105192901	Nut, Acorn, M6, Lock, Silver	2
14	105193001	Screw, 6 Lobe, M6 X 35	2
15	105194402	Panel, Cargo Box, Lh, Med	1
16	105196201	Cap, Corner, Rear, Cargo Bed	1
17	105205201	Screw, 10-24 X .36, St Torx	1
18	96705199	Washer, M6	2
19	105200802	Asm,Cargo Box,Side Panel,PS,Medium (includes items 20 through 28)	1
20	1014321	Screw, #10 Truss-Head Torx	2
21	102554512	Screw M5-08x12 Torx Pn Trs	1
22	105127202	Weldment, Pivot, Tailgate, Rh	1
23	105127402	Asm, Latch, Tailgate, Rh	1
24	105192901	Nut, Acorn, M6, Lock, Silver	2
25	105193001	Screw, 6 Lobe, M6 X 35	2
26	N/A	Panel, Cargo Box, Rh Med	1
27	105196201	Cap, Corner, Rear, Cargo Bed	1
28	96705199	Washer, M6	2
29	105200901	Asm, Cargo Box,Corner,DS (includes items 30 through 32)	1
30	N/A	Extr, Bed Corner, Lh	1
31	105196101	Cap, Corner, Frt, Cargo Bed	1
32	105205201	Screw, 10-24 X .36, St Torx	2
33	105201001	Asm,Cargo Box,Corner,PS (includes items 34 through 36)	1
34	N/A	Extr, Bed Corner, Rh	1
35	105196101	Cap, Corner, Frt, Cargo Bed	1
36	105205201	Screw, 10-24 X .36, St Torx	2
37	324	Screw, 1/4-20 X 2.50 Hx Hd Cap	3
38	96705199	Washer, M6	8

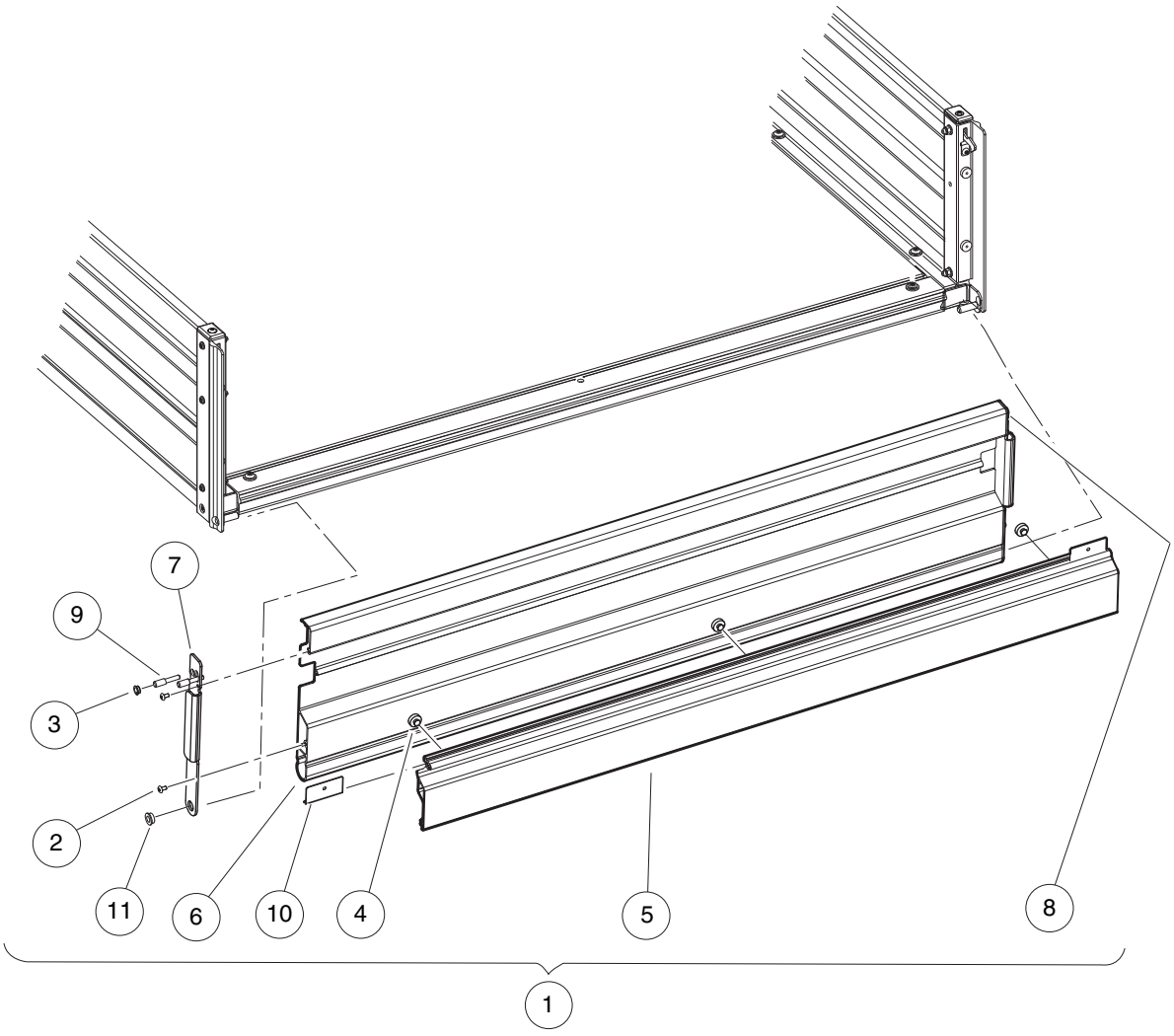

001152-001

CARGO BOX KIT (PAGE 2 OF 2)

ITEM	PART NO.	DESCRIPTION	QTY
		1 2 3 4	
1	105128101	Asm, Tailgate, Wide Handle (includes items 2 through 11)	1
2	1014321	Screw, #10 Truss-Head Torx	4
3	1015363	Bushing, Snap-In	2
4	102590801	Bumper, Rubber	3
5	105128201	Handle, Tailgate, Wide	1
6	N/A	Panel, Tailgate, Wide	1
7	105130301	Bracket, End, Tailgate, Lh	1
8	105130302	Bracket, End, Tailgate, Rh	1
9	105130501	Pin, Latch, Tailgate	4
10	105130601	Spring, Handle, Tailgate	2
11	7049	Bushing, Nylon	2

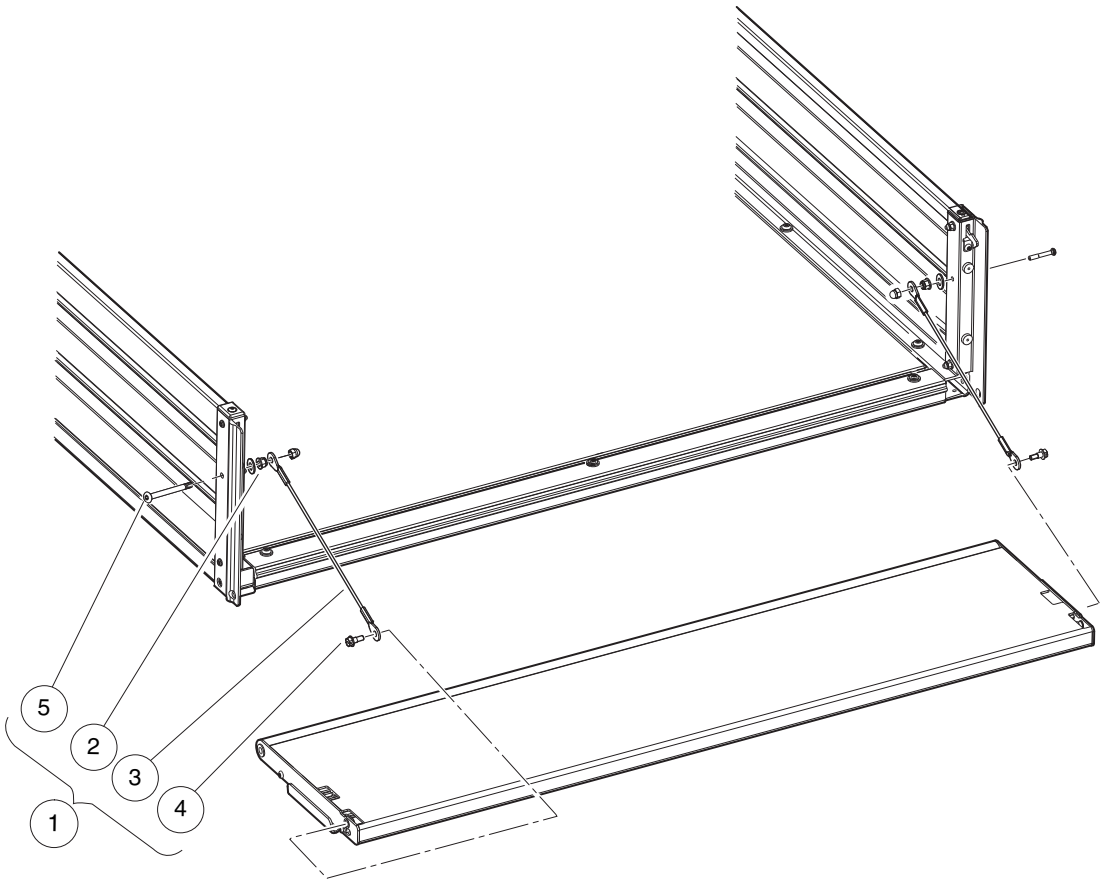

001160-002

TAILGATE TEATHER

ITEM	PART NO.	DESCRIPTION	QTY
		1 2 3 4	
1	105127302	Kit, Tether, Tailgate (includes items 2 through 5)	1
2	102621501	Nut, Flange, M6 X 1.0, Nylon	2
3	105128001	Cable, Tether, Tailgate	2
4	105129901	Screw, Shoulder, Self Thread	2
5	105193101	Screw, 6 Lobe, M6 X 50	2

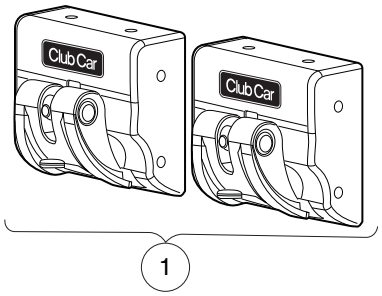

1

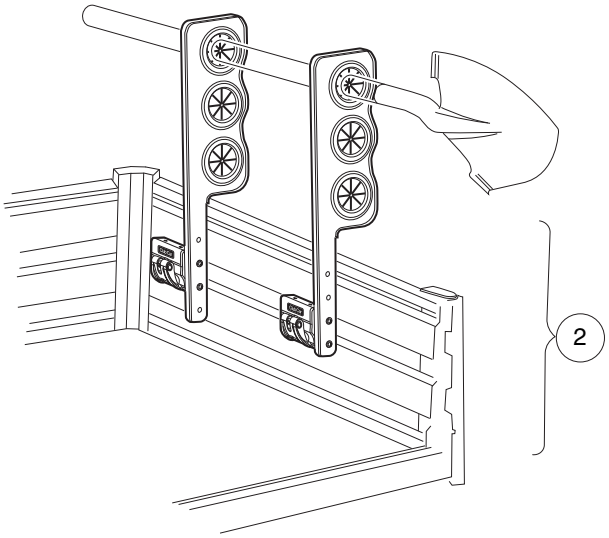

2

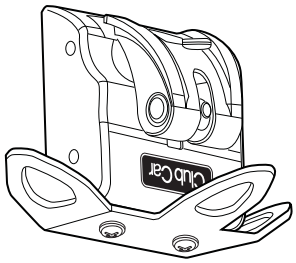

3

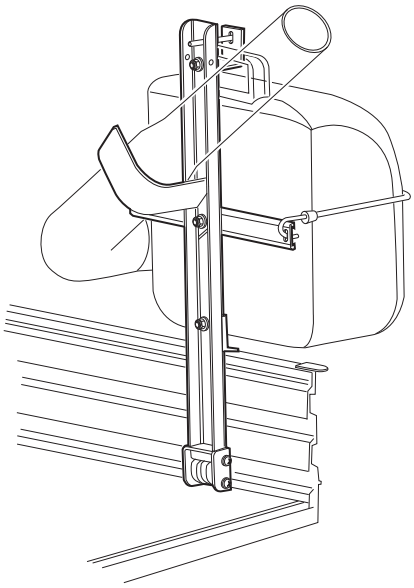

5

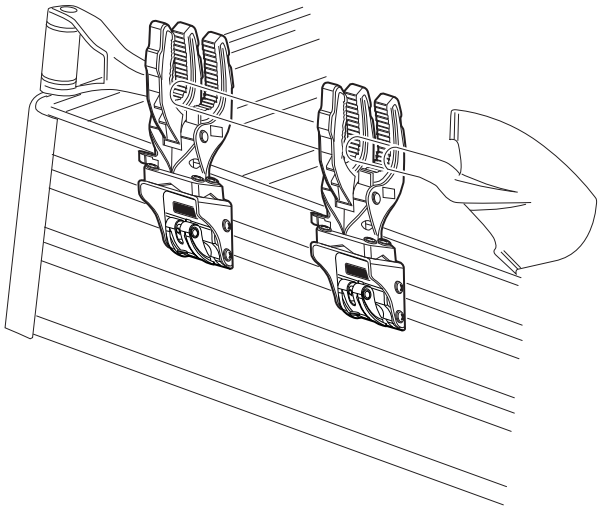

4

001167-001

MODULAR BED ACCESSORIES

ITEM	PART NO.	DESCRIPTION	QTY
		1 2 3 4	
1	105160401	Bed Clamp, Set	1
2	105160801	Kit, Tool Rack	1
3	105160901	Kit, Tie Down	1
4	105161101	Kit, Static Grip	1
5	105161401	Kit, Holder, Leaf Blower	1

Note: Component part numbers unavailable at publication.

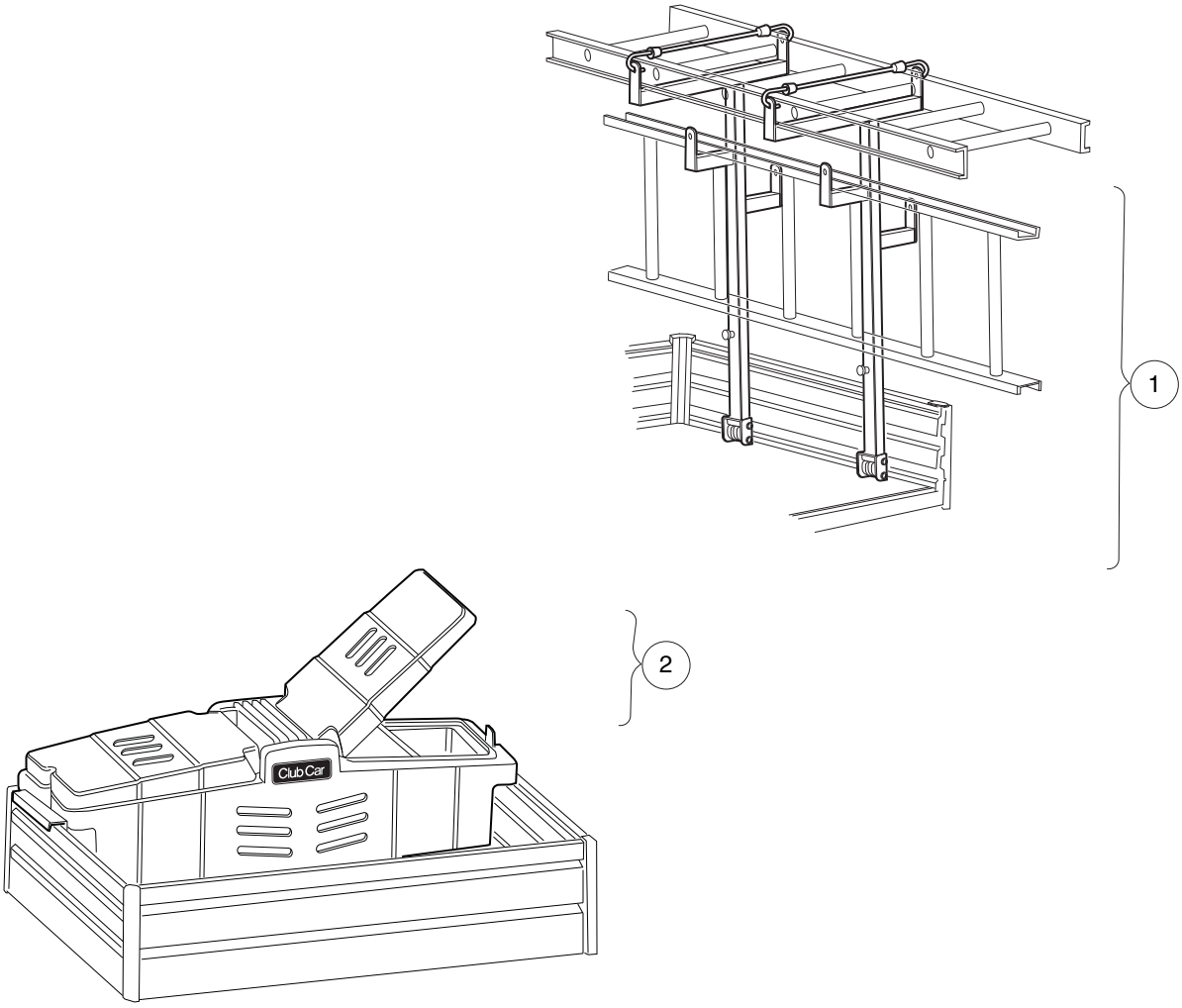

001168-001

ITEM	PART NO.	DESCRIPTION	QTY
		1 2 3 4	
1	105161501	Kit, Rack, Ladder	1
2	105161601	Kit, Toolbox	1
		Note: Component part numbers unavailable at publication.	

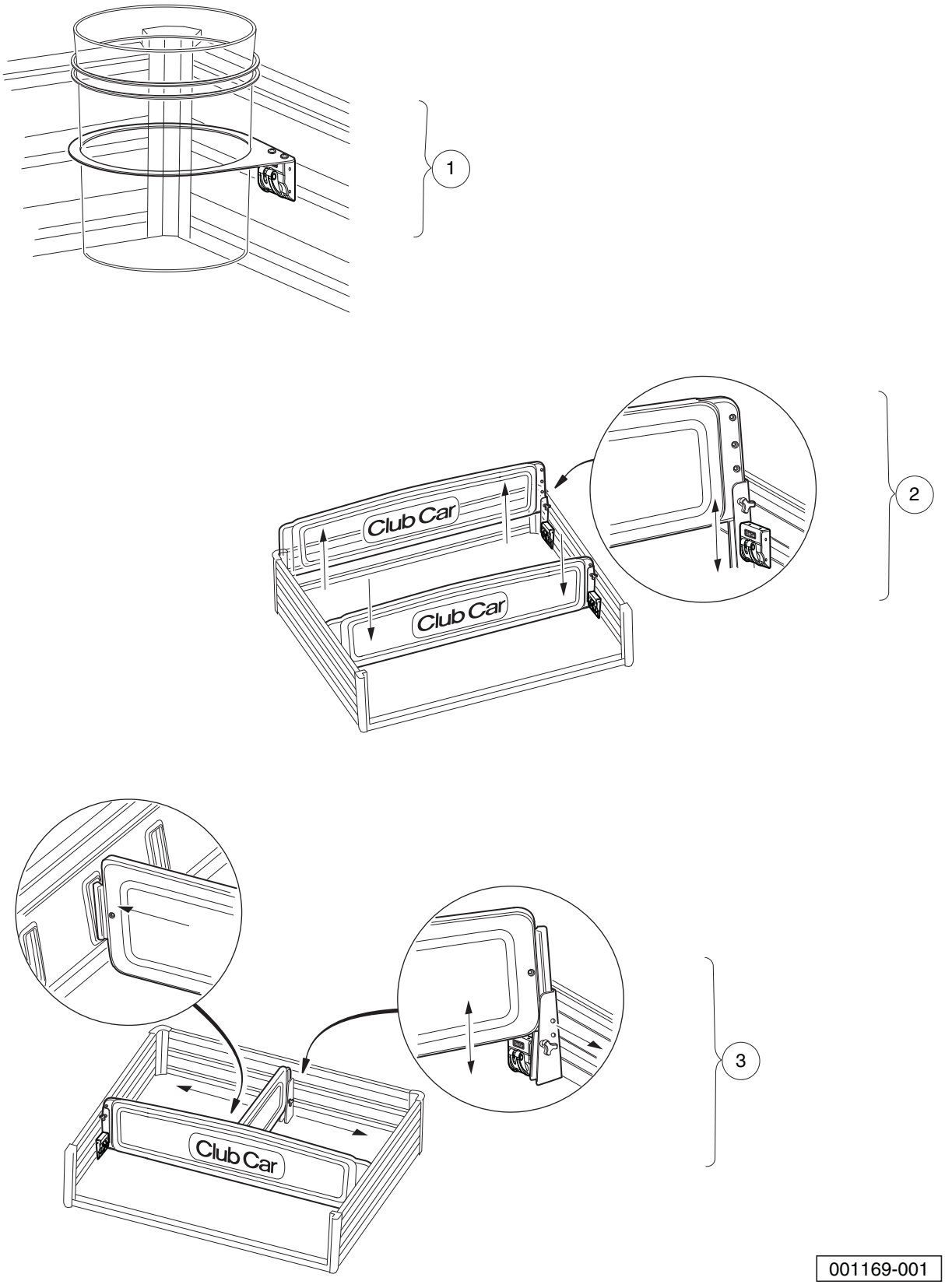
1
Club Car
Club Car
2
Club Car
3
001169-001

MODULAR BED ACCESSORIES

ITEM	PART NO.	DESCRIPTION	QTY
		1 2 3 4	
1	105160501	Kit, Holder, Bucket	1
2	105161201	Kit, Bed Divider/extension	1
3	105161301	Kit, Bed Divider, Short	1
		Note: Component part numbers unavailable at publication.	

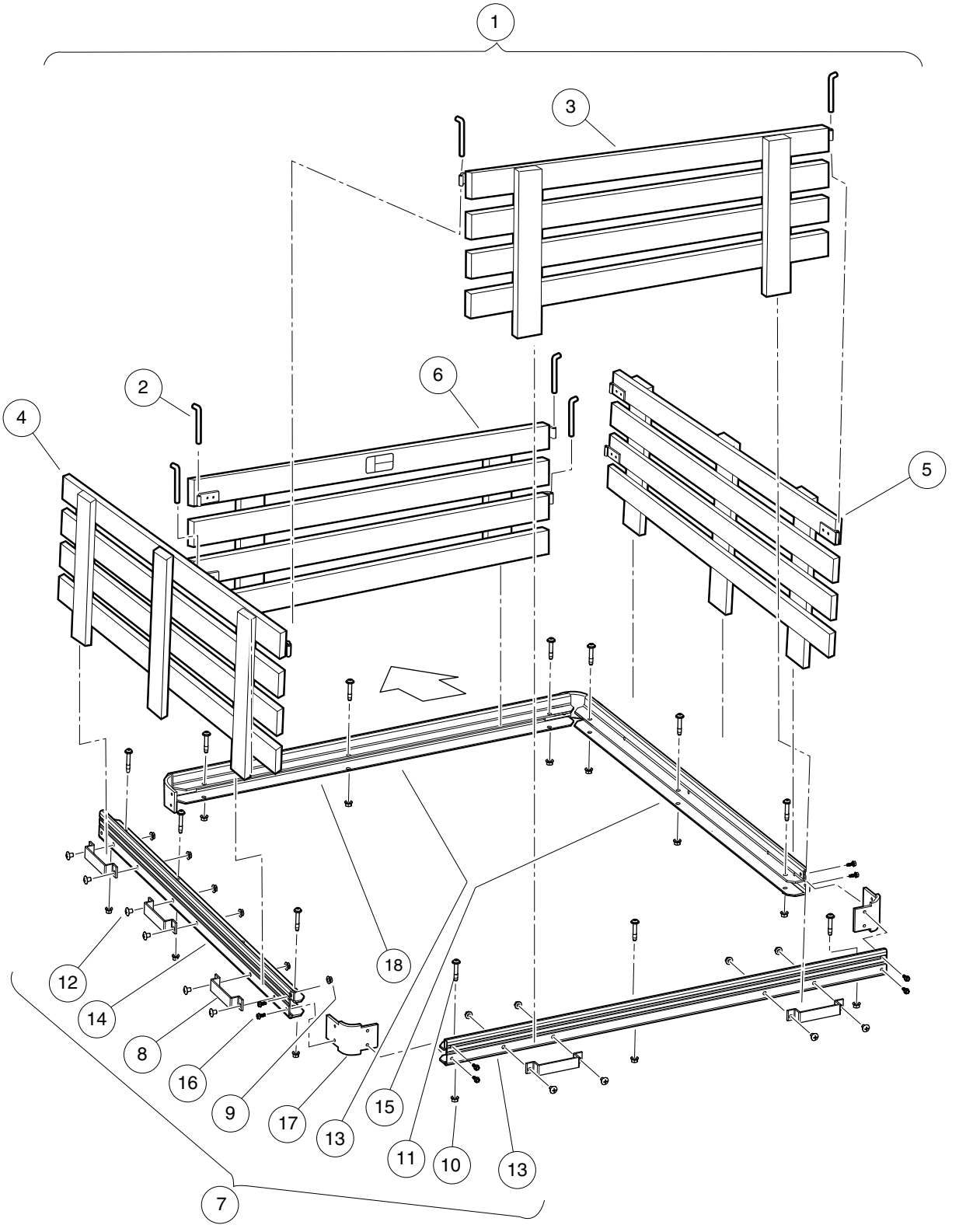
1
2
3
4
5
6
7
8
9
10
11
12
13
13
14
15
16
17
18
001130-001

STAKE SIDE KIT – MEDIUM

ITEM	PART NO.	DESCRIPTION	QTY
		1 2 3 4	
1	105109501	Kit, Stake Side, Med (includes items 2 through 7)	1
2	1015656	Pin, hinge	6
3	102847603	Asm, Stake Side, 48 X 19 Rear	1
4	105113301	Stake Side, Ca Med, Lh	1
5	105113302	Stake Side, Ca Med, Rh	1
6	105129501	Stake Side, Front, Ca, 50"	1
7	105148502	Asm, Trim, Stake Side, Med (includes items 8 through 18)	1
8	1016077	Bracket, Stake Side	8
9	101963401	Locknut, 5/16-18 Hex Flange	16
10	102298401	Nut,m8,all Metal Lock	14
11	102299550	Screw,m8x50,sems,tx,bttn,plt	14
12	105129601	Screw, Phl Trus Hd, 5/16-18x.5	16
13	105148601	Trim, Stake Side, Cen, Rear	1
14	105148801	Trim, Stake Side, Med, Lh	1
15	105148802	Trim, Stake Side, Med, Rh	1
16	105185701	Pan Head Screw, M6 X 16 Tt	16
17	105185801	Bracket,Bed Corner,CA	4
18	105194801	Trim, Bed, Cntr, Front	1

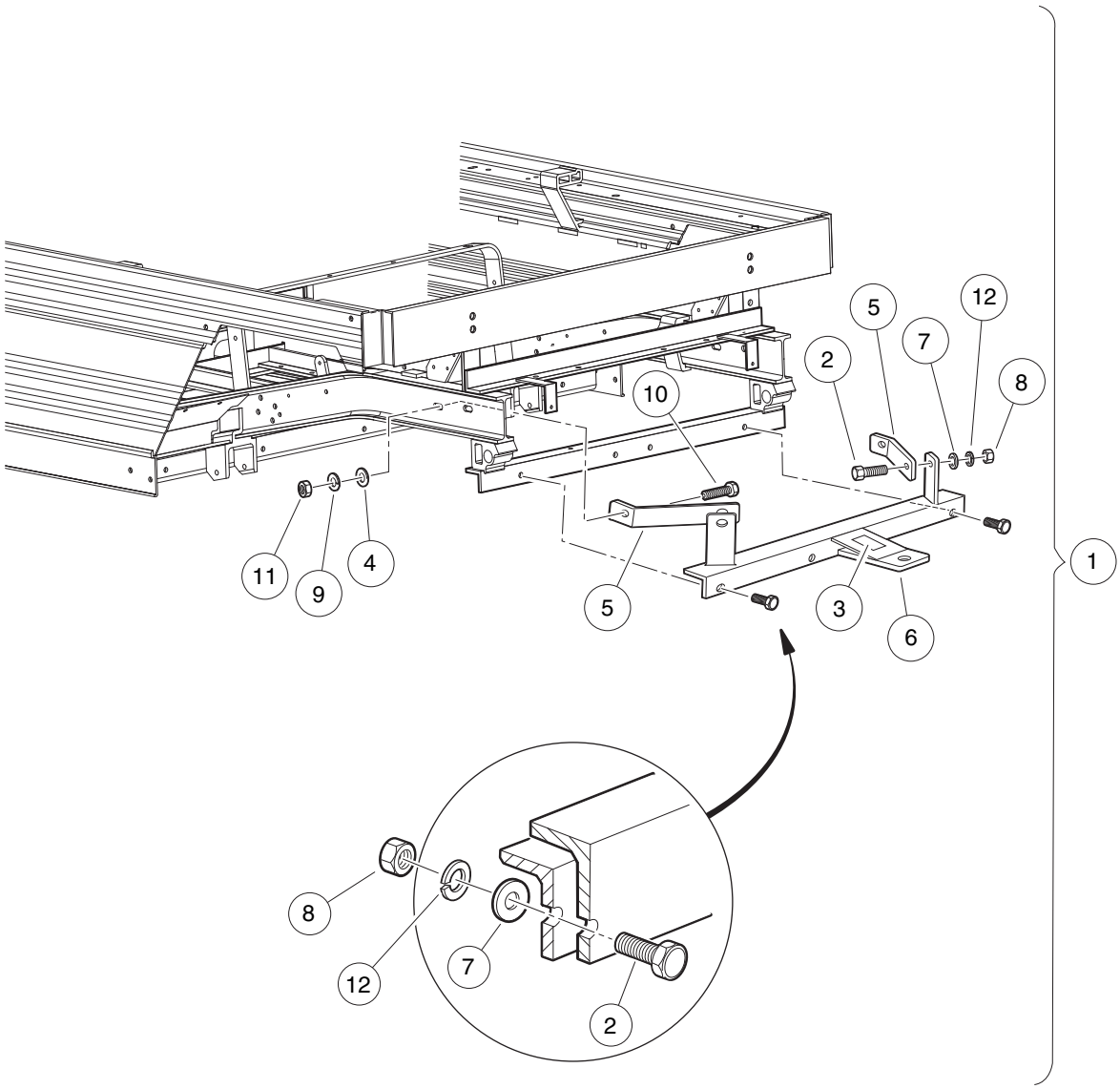
1
2
3
4
5
6
7
8
9
10
11
12
001132-001

HEAVY DUTY TRAILER HITCH

ITEM	PART NO.	DESCRIPTION	QTY
		1 2 3 4	
1	1015445	Kit, Trailer Hitch (includes items 2 through 12)	1
2	1010934	Screw, 5/16-18 X 1.00 Hex Cap	4
3	1011553	Decal, Trailer Hitch	1
4	1011990	Washer, 3/8 Flat	2
5	1013483	Brace, Trailer Hitch	2
6	N/A	Asm, Trailer Hitch	1
7	1241	Washer, 5/16 Type A Flat	4
8	1242	Nut, 5/16-18 Hex	4
9	357	Lockwasher, 3/8 Split	2
10	705	Screw, Cap-hex Hd 3/8-16x1.25	2
11	706	Nut, Hex 3/8-16	2
12	7174	Lockwasher, 5/16 Split	4

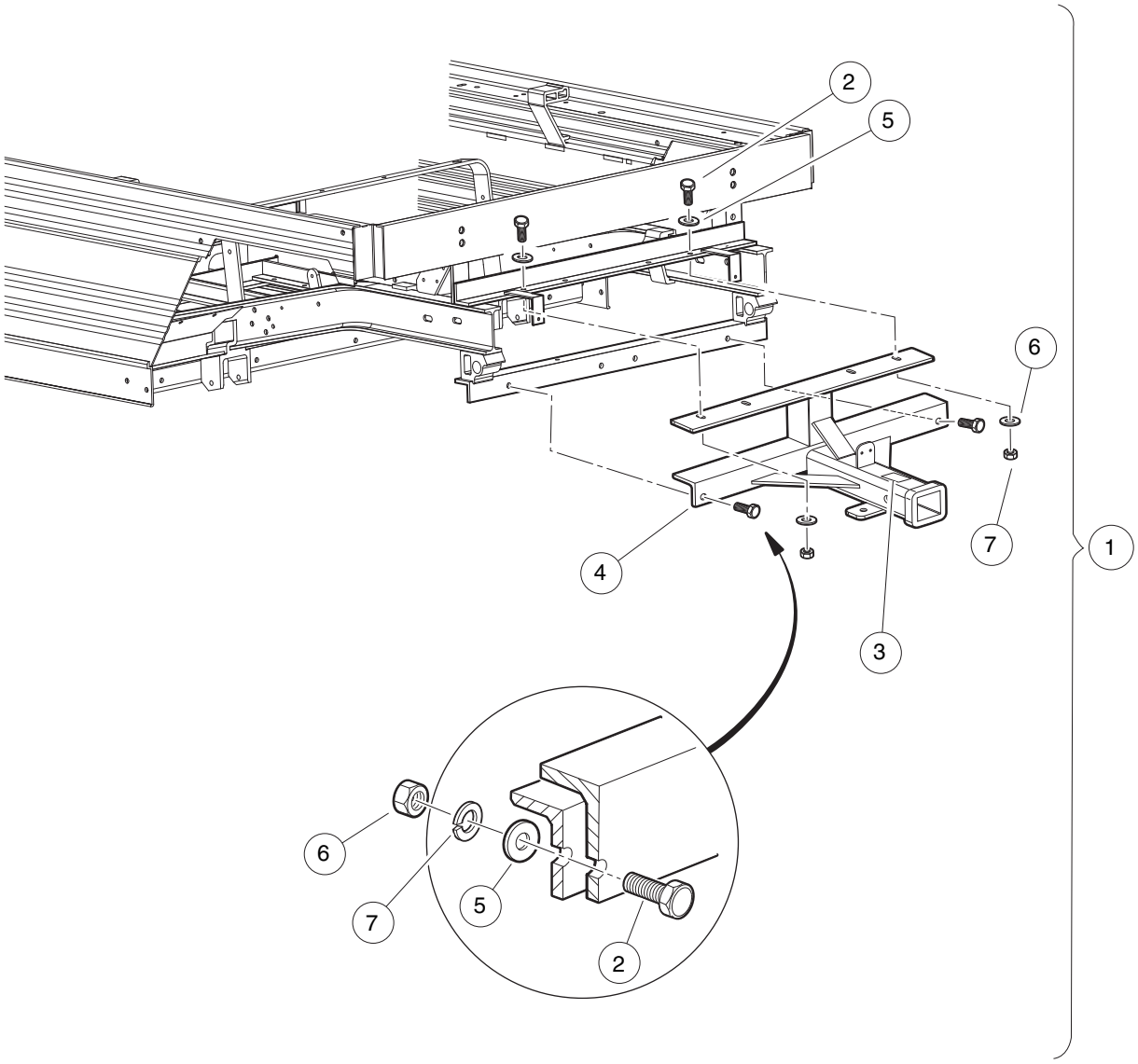

001133-001

REAR RECIEVER HITCH

ITEM	PART NO.	DESCRIPTION	QTY
		1 2 3 4	
1	102065103	Kit, Rear Receiver (includes items 2 through 7)	1
2	1010934	Screw, 5/16-18 X 1.00 Hex Cap	6
3	1011553	Decal, Trailer Hitch	1
4	102056001	Rear Receiver Weld Asm	1
5	1241	Washer, 5/16 Type A Flat	6
6	1242	Nut, 5/16-18 Hex	6
7	7174	Lockwasher, 5/16 Split	6

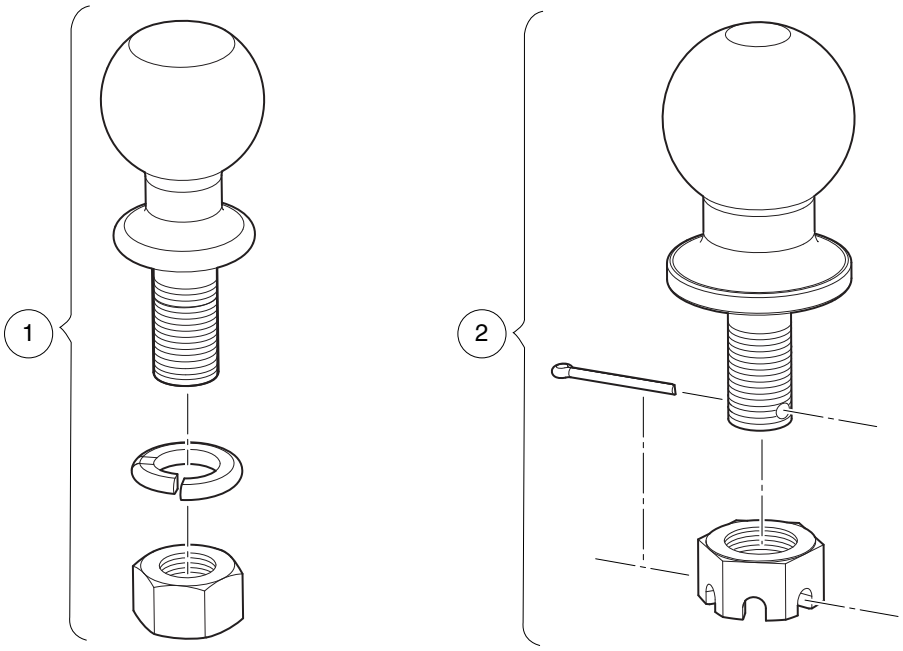

001137-001

TRAILER HITCH BALL

ITEM	PART NO.	DESCRIPTION	QTY
		1 2 3 4	
1	1011546	Trailer Hitch Ball - 1 7/8"	1
2	104033601	Ball, Trailer Hitch, 50mm	1

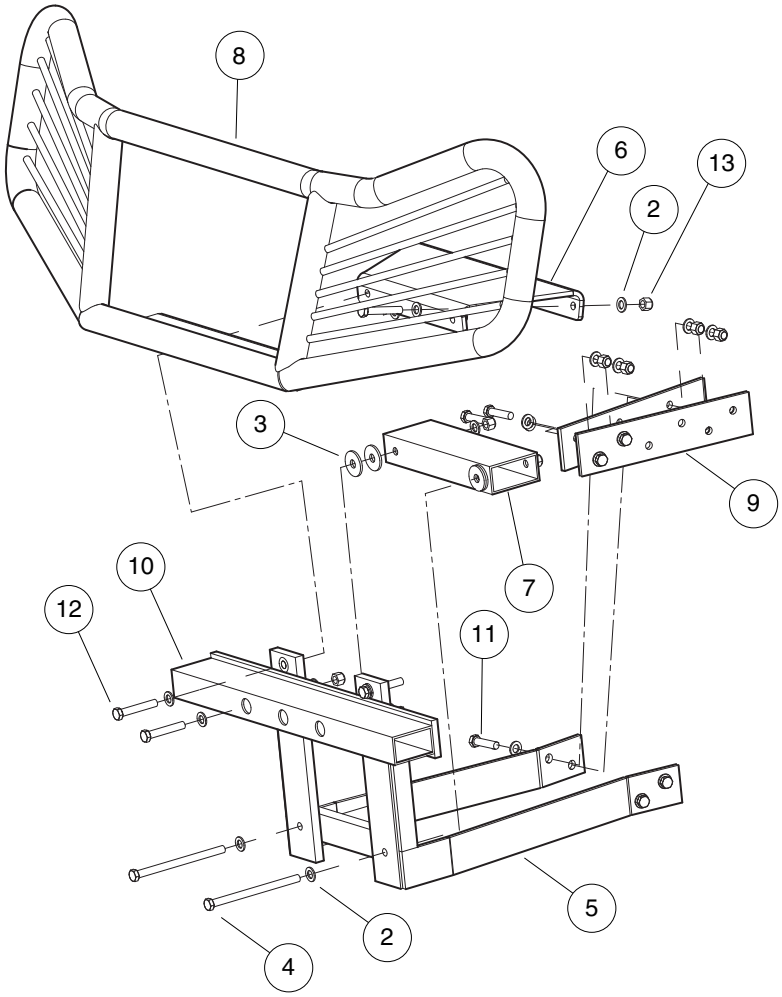

001138-002

RANGE PICKER ADAPTER

ITEM	PART NO.	DESCRIPTION	QTY
		1 2 3 4	
1	105124101	Kit, Adapter, Range Picker (includes items 2 through 13)	1
2	1011990	Washer, 3/8 Flat	32
3	102491501	Washer, Hard, M10	4
4	102913601	Screw, 3/8-16 X 5.50 Hx Hd Cap	2
5	104033701	Weldment, Adapter, Rp	1
6	105145401	Bracket, Top Support, Rp	1
7	105145501	Tube, Btm Support, Rp	1
8	105216701	Wldmnt, Guard, Hdlight, Range	1
9	105233701	Plate, Support, I-beam	2
10	105248201	Tube, 1.5" X 2.5", 19.5" Long	1
11	1624	Screw, 3/8-16 X 1.50, Hex-Head Cap	8
12	2402	Screw, 3/8-16 X 2.25 Hx Hd Cap	6
13	8754	Locknut, 3/8-16 Hex	16

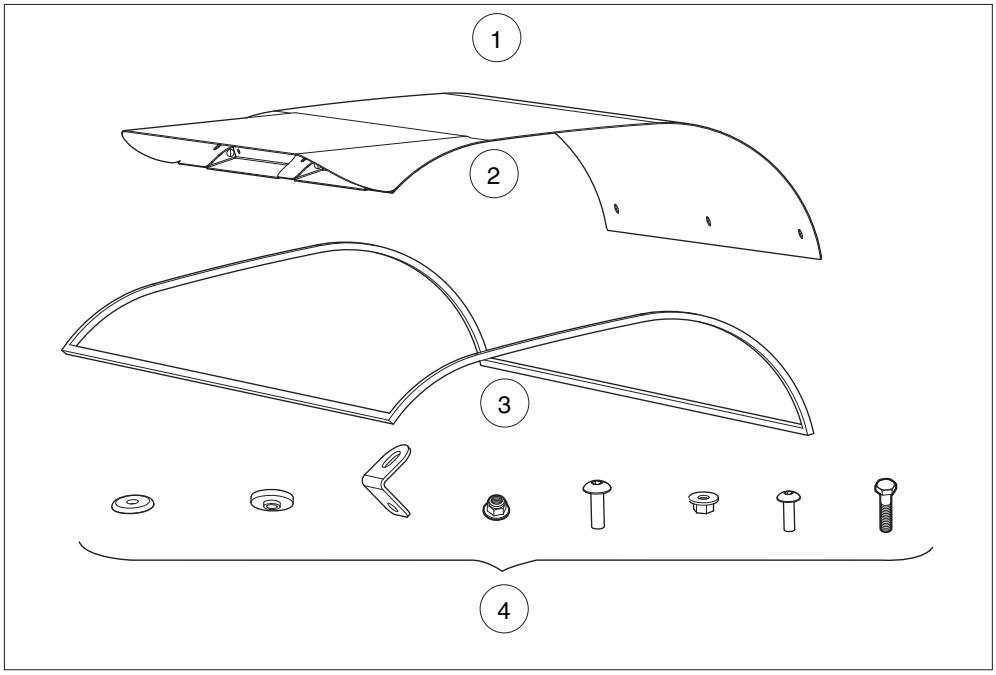

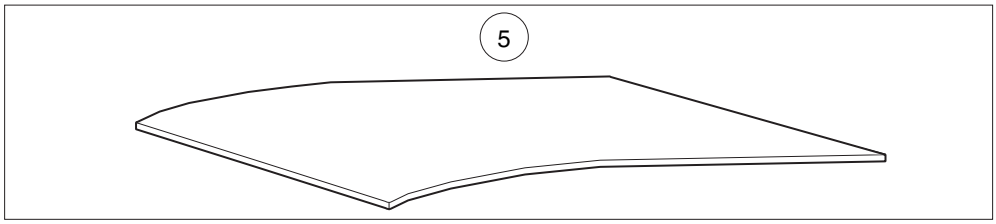

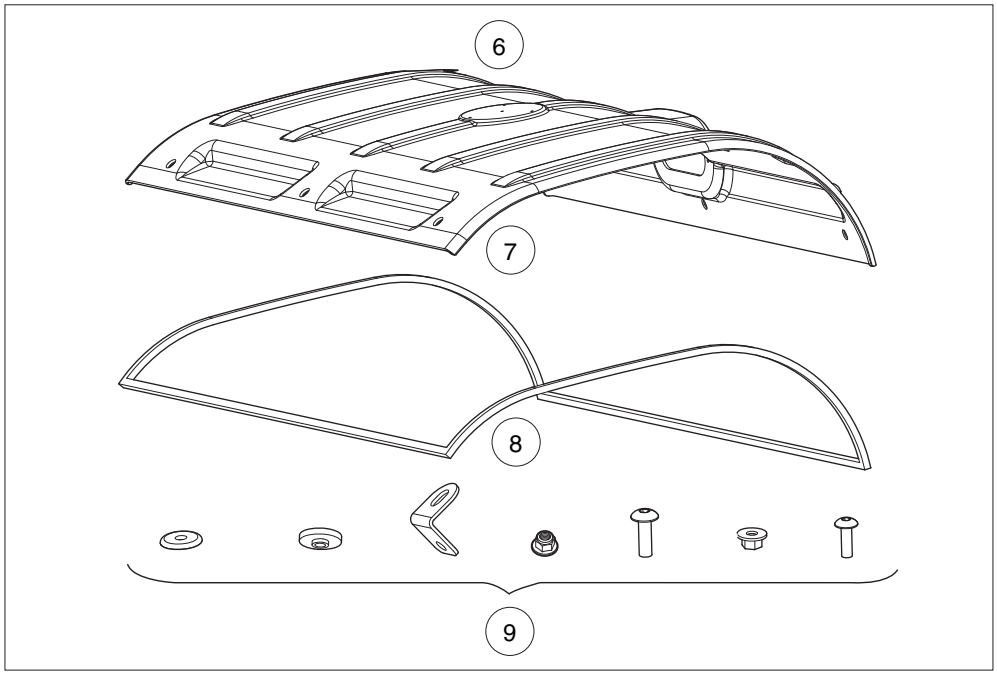

001182-001

CAB CANOPY

ITEM	PART NO.	DESCRIPTION	QTY
		1 2 3 4	
1	105096901	Cab, Canopy, Fops Kit (includes items 2 through 4)	1
2	105177501	Cab, Canopy Fops	1
3	105177601	Seal, Cab Canopy	1
4	105177801	Hardware Kit, Canopy Fops	1
5	105097001	Cab, Canopy, Liner Kit	1
6	105098801	Cab, Canopy Kit (includes items 7 through 9)	1
7	105177301	Cab, Canopy	1
8	105177601	Seal, Cab Canopy	1
9	105177701	Hardware Kit, Canopy	1

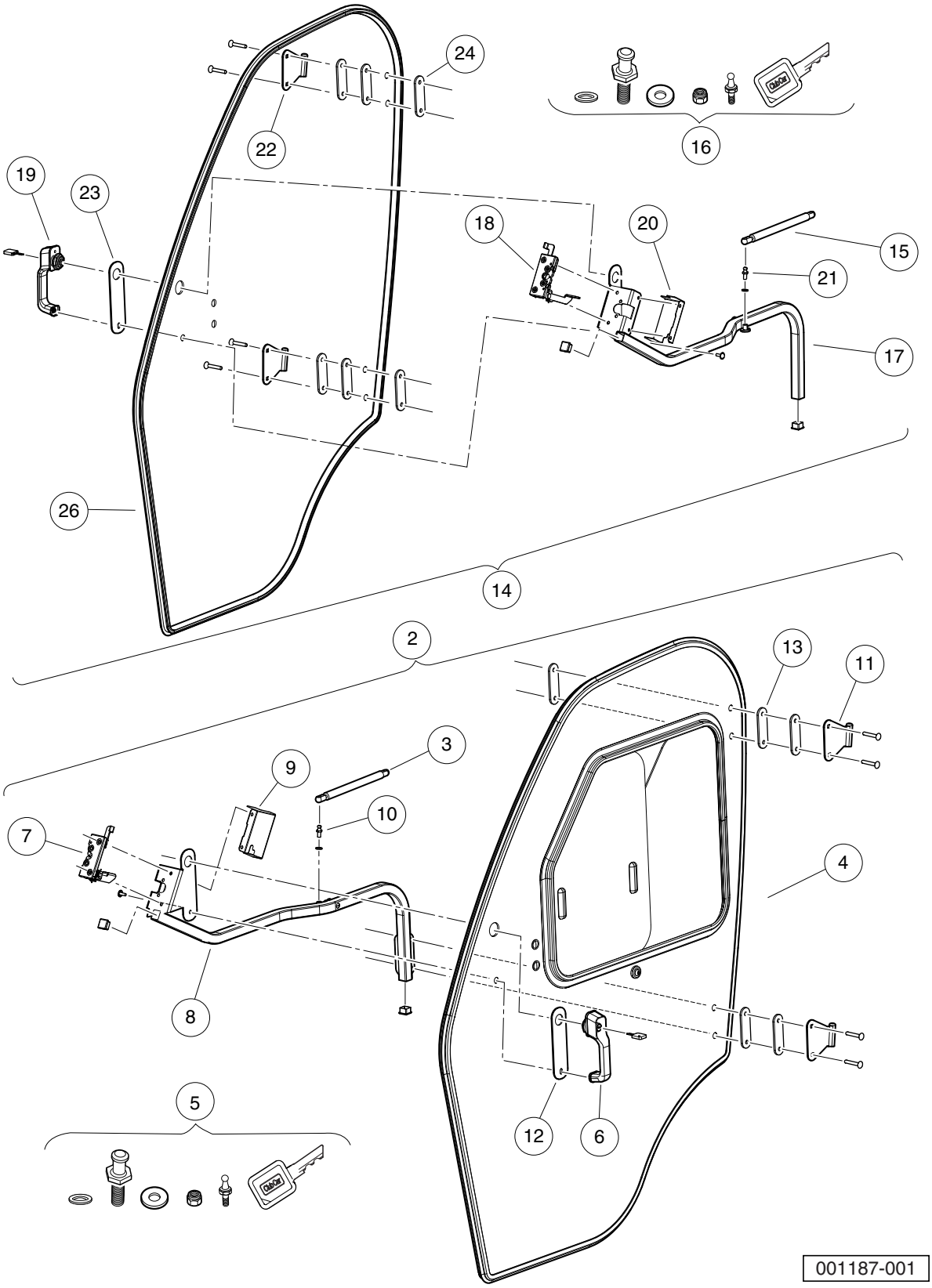
24
22
16
19
23
18
20
15
21
17
26
14
2
13
11
3
9
10
7
4
8
5
12
6
001187-001

CAB DOORS – GLASS

ITEM	PART NO.	DESCRIPTION	QTY
		1 2 3 4	
1	105097301	Cab, Doors, Glass Kit (includes items 2 through 14)	1
2	105181701	Glass Door Asm, Lh (includes items 3 through 13)	1
3	104001201	Gas Spring	1
4	105181801	Glass Door Replacement, Lh	1
5	105181901	Hardware Kit, Glass Door	1
6	105182001	Handle, Push Button	1
7	105182101	Latch, Glass Door, Lh	1
8	105182201	Handle, Glass Door, Lh	1
9	105182301	Cover, Latch, Lh	1
10	105182401	Spring, Ball Stud	1
11	105182501	Hinge, Door	2
12	105182601	Spacer, Handle	1
13	105182701	Plate, Upper Hinge	1
14	105182901	Glass Door Asm, Rh (includes items 15 through 26)	1
15	104001201	Gas Spring	1
16	105181901	Hardware Kit, Glass Door	1
17	105182002	Handle, Glass Door, RH	1
18	105182102	Latch, Glass Door, Rh	1
19	105182202	Handle, Glass Door, Rh	1
20	105182302	Cover, Latch, Rh	1
21	105182401	Spring, Ball Stud	1
22	105182501	Hinge, Door	2
23	105182601	Spacer, Handle	1
24	105182701	Plate, Upper Hinge	1
25	105182801	Hardware Kit, Door Striker	1
26	105183001	Glass Door Replacement, Rh	1

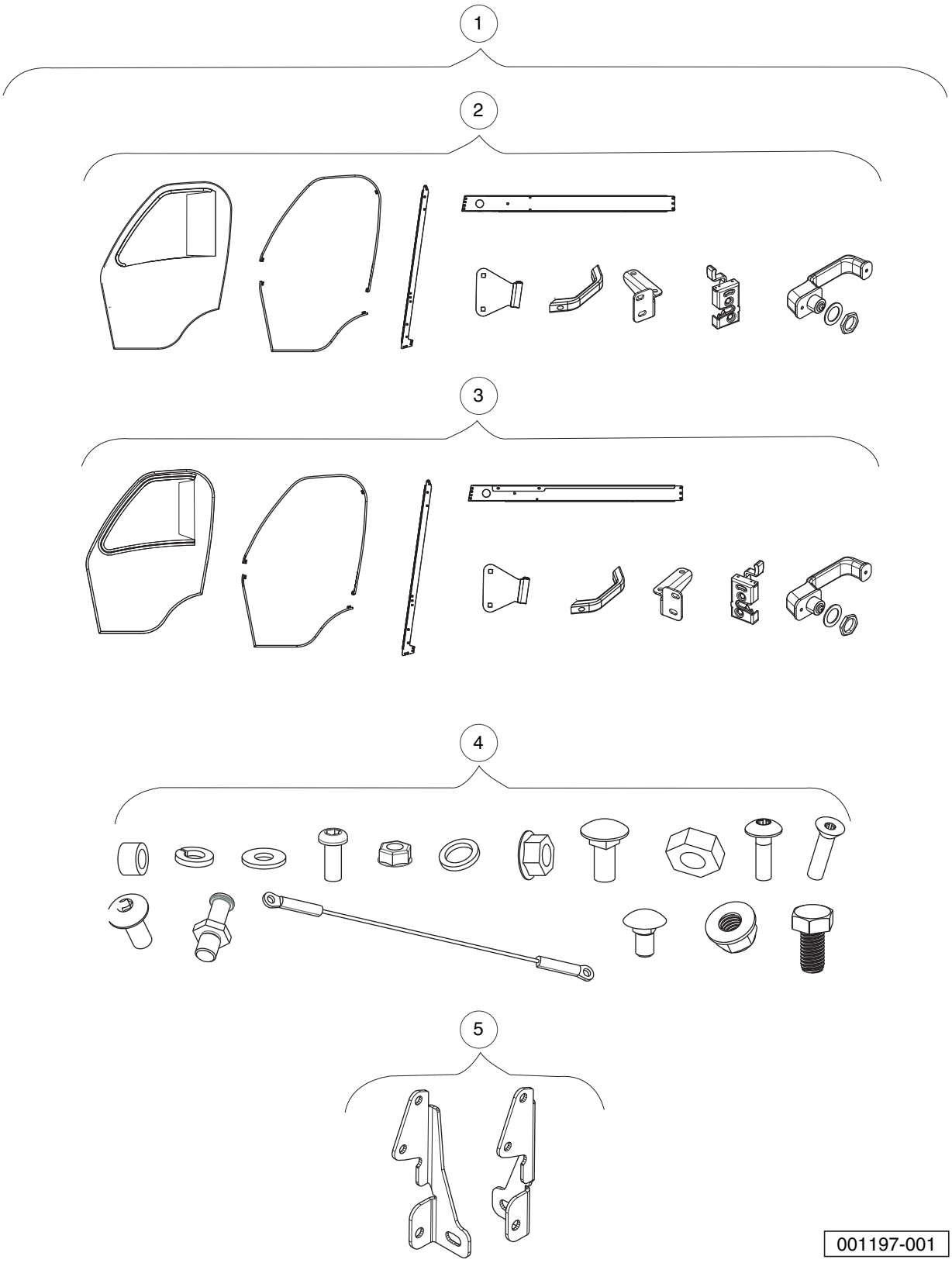
1
2
3
4
5
001197-001

CAB DOORS – SOFT

ITEM	PART NO.	DESCRIPTION	QTY
		1 2 3 4	
1	105097401	Cab, Doors, Soft Kit (includes items 2 through 5)	1
2	105183101	Soft Door Asm, Lh	1
3	105183201	Soft Door Asm, Rh	1
4	105183301	Hardware, Soft Door	1
5	105183401	Hardware Kit, Soft Door Strike	1

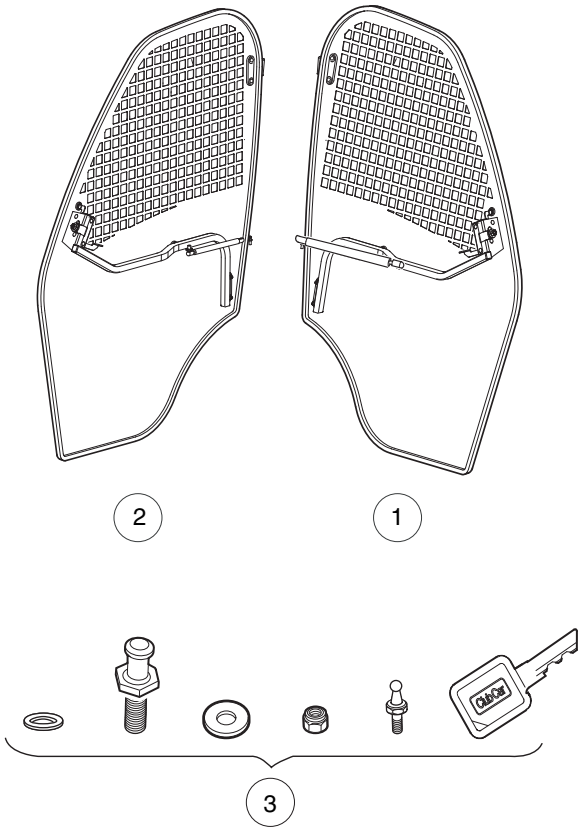

001195-001

CAB DOORS – RANGE

ITEM	PART NO.	DESCRIPTION	QTY
		1 2 3 4	
1	105176701	Door, Range, Lh Asm	1
2	105176801	Door, Range, Rh Asm	1
3	105177201	Hardware Kit, Range Cab	1

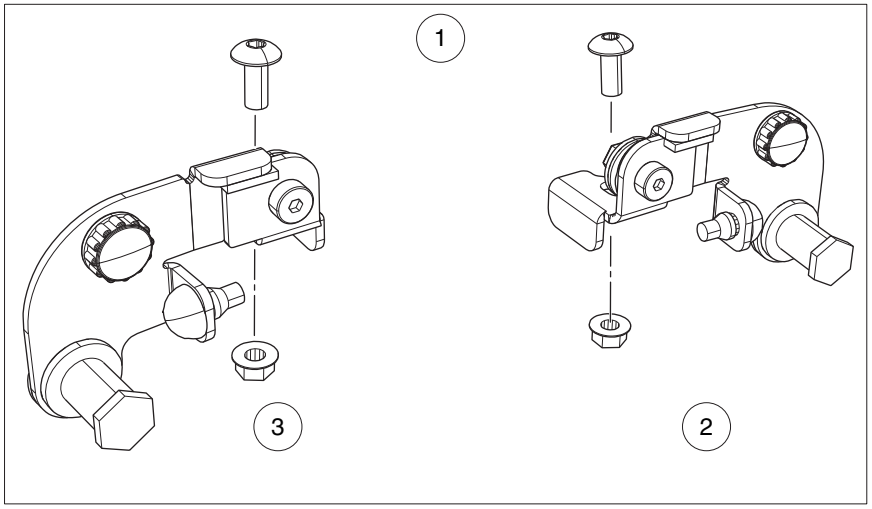

001143-002

CAB DOORS – VENT

ITEM	PART NO.	DESCRIPTION	QTY
		1 2 3 4	
1	105097501	Cab, Door, Vent Kit (includes items 2 and 3)	1
2	105178301	Door Vent Lh	1
3	105178401	Door Vent Rh	1

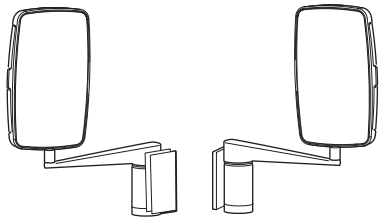

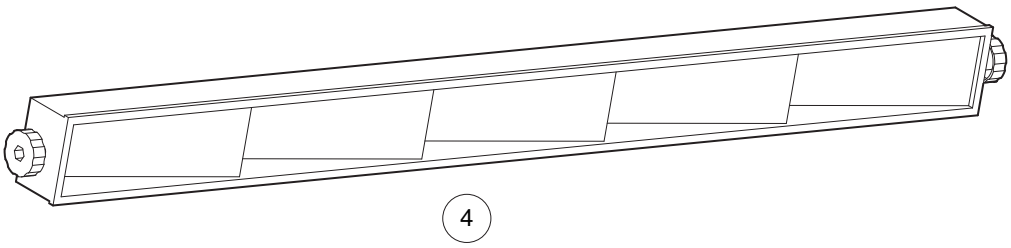

001198-001

CAB - MIRRORS

ITEM	PART NO.	DESCRIPTION	QTY
		1 2 3 4	
1	105098501	Cab, Mirror, Left Hand Kit	1
2	105098502	Cab Passenger Side Mirror Kit	1
3	105098701	Cab, Mirror, Interior Kit	1
4	105289301	Kit, Mirror, 5 Panel, Cab	1

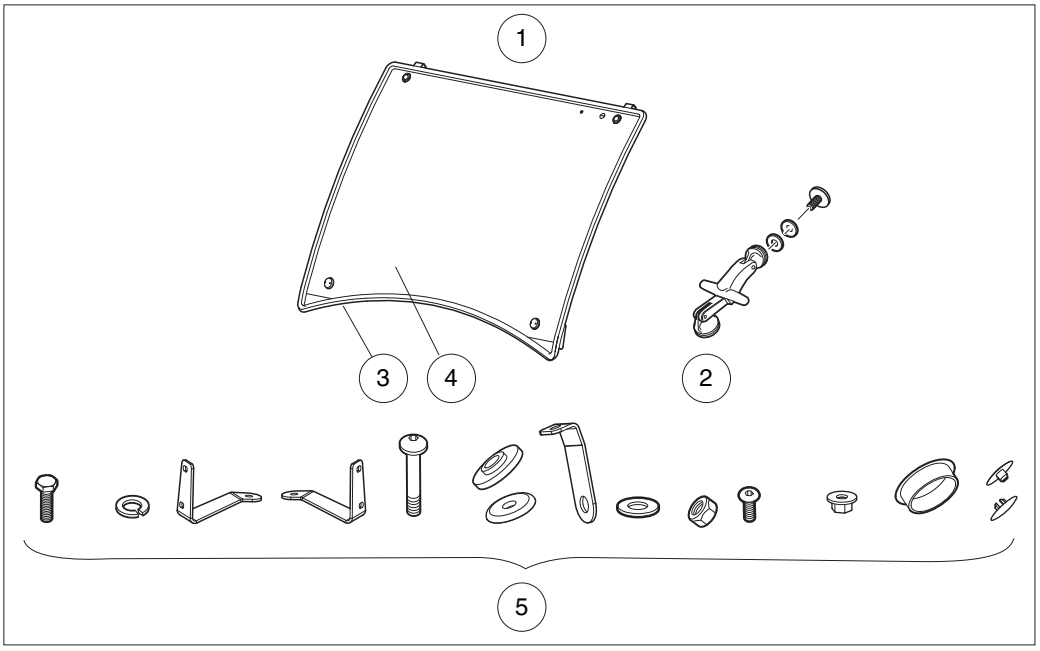

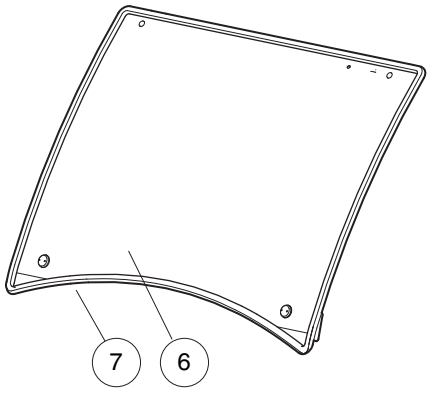

001184-001

CAB – WINDSHIELD

ITEM	PART NO.	DESCRIPTION	QTY
		1 2 3 4	
1	105097101	Cab, Windshield Kit (includes items 2 through 5)	1
2	104003901	Handle, Tee	2
3	105177101	Seal, Rubber Windshield	1
4	105177901	Cab, Windshield, Tempered	1
5	105178001	Hardware Kit, Windshield	1
6	105177001	Front Window Polycarb (Range)	1
7	105177101	Seal, Rubber Windshield	1

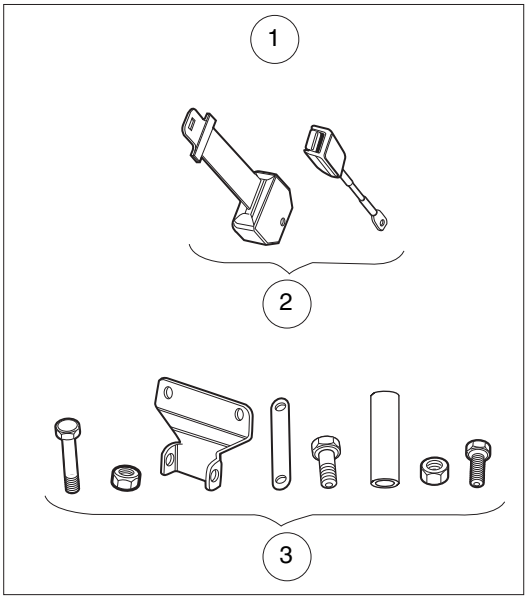

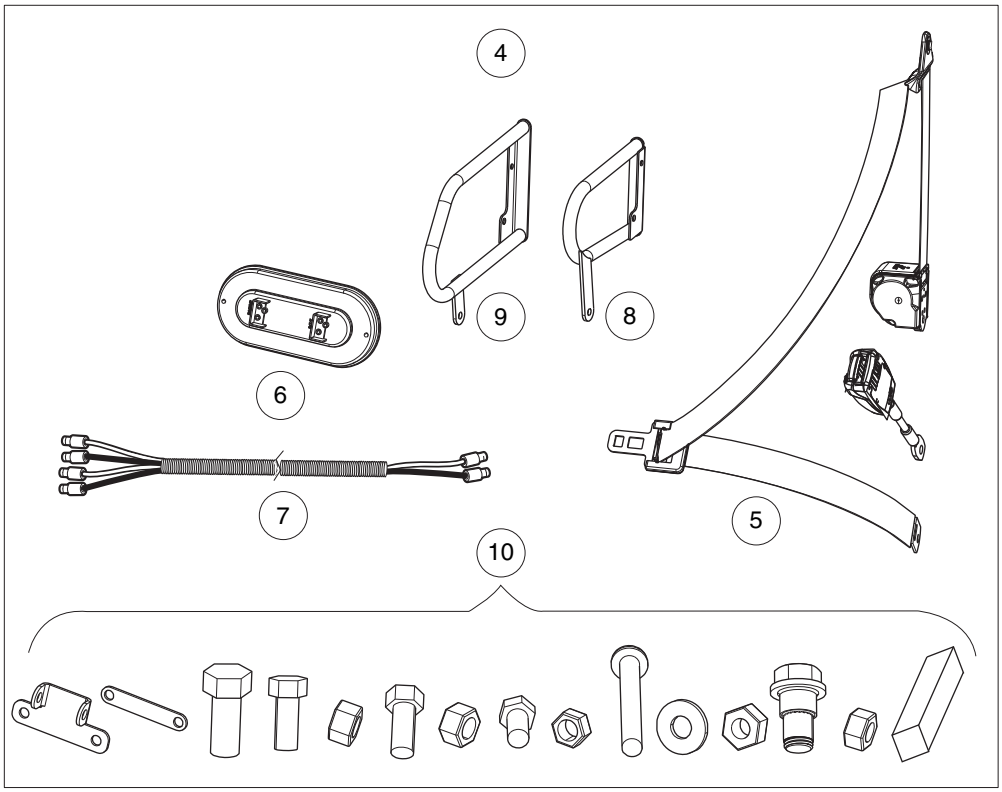

001180-001

CAB – SEAT BELTS

ITEM	PART NO.	DESCRIPTION	QTY
		1 2 3 4	
1	105096401	Cab, 2 Pt Seat Belt Kit (includes items 2 and 3)	1
2	105175601	Seatbelt Asm 2pt	2
3	105175701	Hardware Kit, 2pt Seat	1
4	105096501	Cab, 3 Pt Seat Belt, Lsv Kit (includes items 5 through 10)	1
5	105175801	Seat Belt Asm 3pt Dom	2
6	105175901	Light Chmsl, Cab	1
7	105176001	Chmsl Harness	1
8	105176101	Hip Restraint Ds, Cab	1
9	105176201	Hip Restraint Ps, Cab	1
10	105176301	Hardware Kit, 3pt Sbelt Dom	1

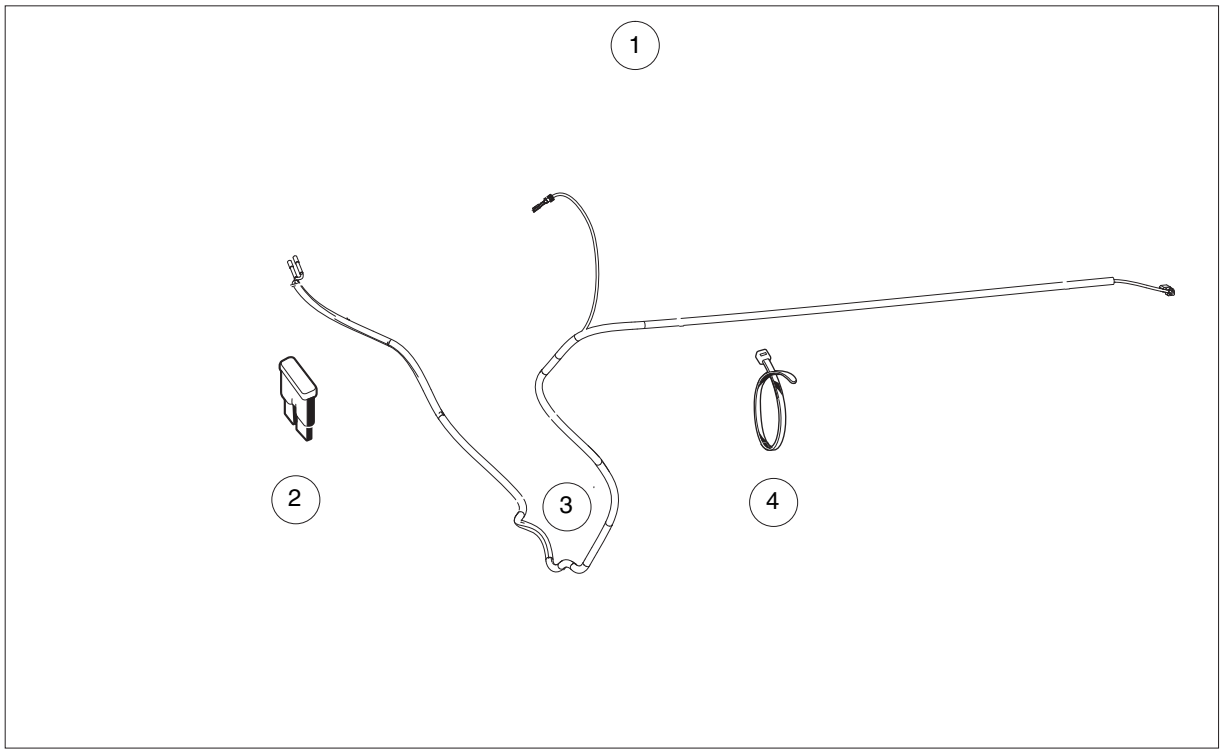

001193-001

CAB – ELECTRICAL, POWER HARNESS, ELECTRIC VEHICLE TO CAB

ITEM	PART NO.	DESCRIPTION	QTY
		1 2 3 4	
1	105234002	Kit, Cab Pwr Harness, Elec (includes items 2 through 4)	1
2	105114807	Fuse, Mini, Atm, 15 Amp	1
3	105205501	Harn, Pwr Supply, Cab	1
4	8639	Tie Wrap, 11" Nylon	5

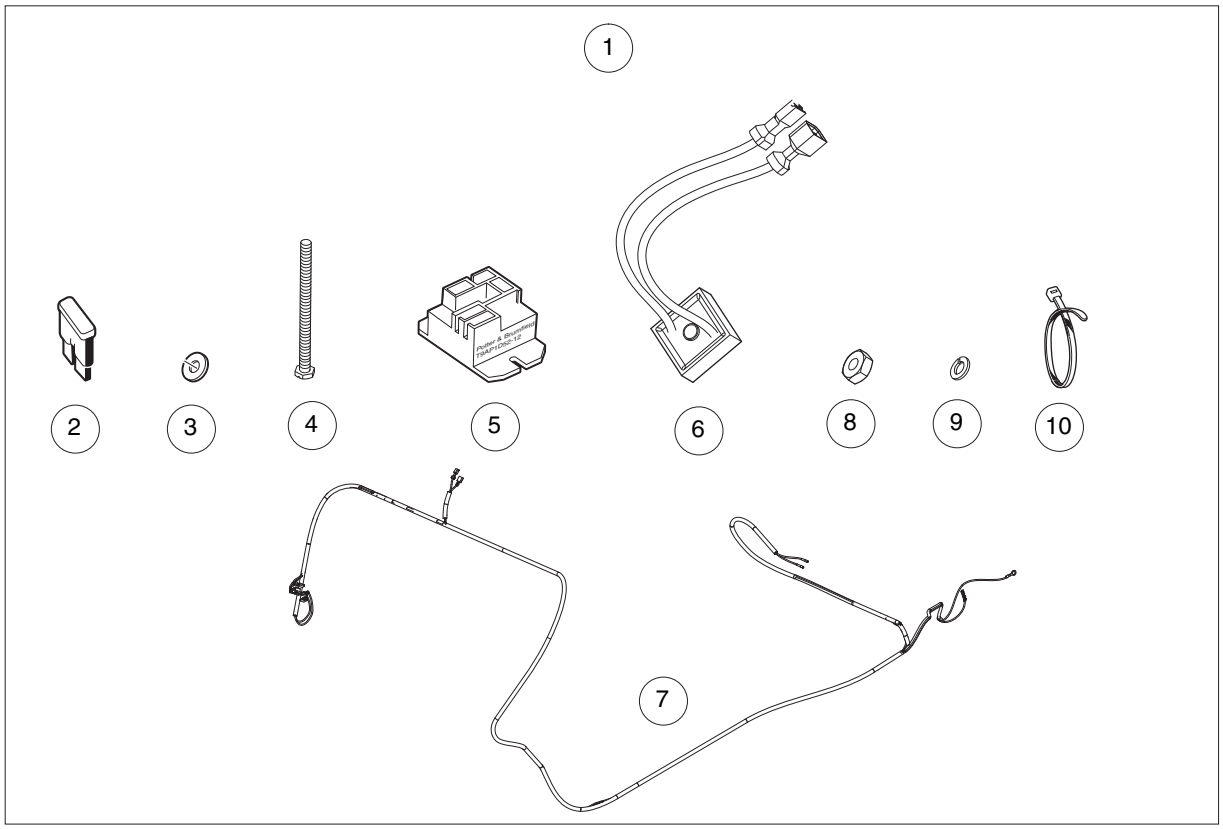

001194-001

CAB – ELECTRICAL, CAB POWER HARNESS, GASOLINE VEHICLE TO CAB

ITEM	PART NO.	DESCRIPTION	QTY
		1 2 3 4	
1	105234102	Kit, Cab Pwr Harness, Gas (includes items 2 through 10)	1
2	1012295	Fuse, 10-Amp	1
3	1012431	Washer, #4 Flat	3
4	1015878	Screw, #4-40 Hex Head Machine	3
5	102199001	Relay, 12-Volt	1
6	102529101	Voltage Limiter, Prec	1
7	105236301	Harness, Pwr, Cab, Gas	1
8	8057	Nut, #4-40 Hex Machine	3
9	8058	Lockwasher, #4 Split	3
10	8639	Tie Wrap, 11" Nylon	17

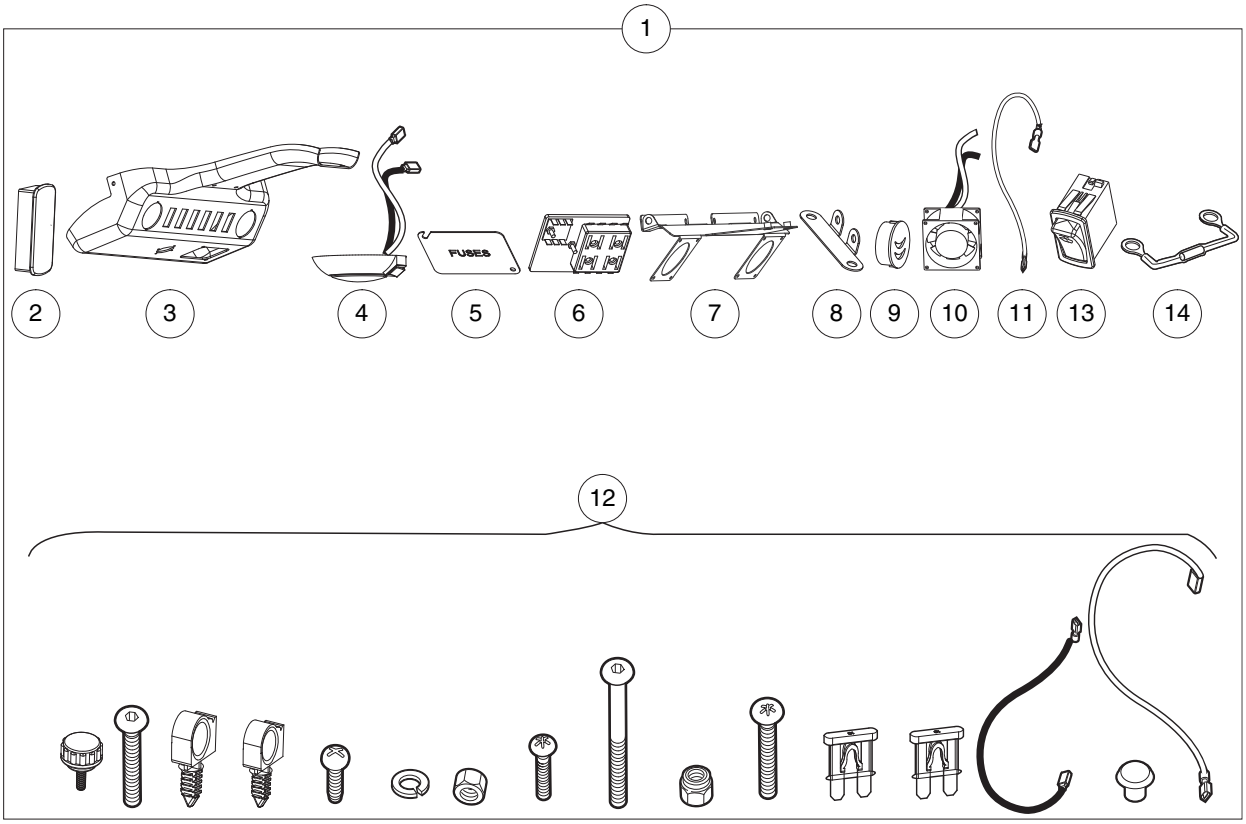

001188-002

CAB – ELECTRICAL, OVERHEAD CONSOLE

ITEM	PART NO.	DESCRIPTION	QTY
		1 2 3 4	
1	105097901	Cab, Overhead Console, Kit (includes items 2 through 14)	1
2	103180101	Cover, Hole, Switch, Rocker	5
3	105179001	Overhead Console Asm	1
4	105179101	Cab, Dome Light	1
5	105179201	Cab, Fuse Cover	1
6	105179301	Cab, Fuse Holder 8 W Grnd	1
7	105179401	Front Fan Bracket, Asm	1
8	105179501	Rear Oh Console Bracket	1
9	105179601	Fan Louver	2
10	105179701	Oh Console Fan	1
11	105179801	Wire Jumper, Fan	1
12	105179901	Hardware Kit, Oh Console	1
13	105183501	Rocker, Fan	1
14	105295301	Asm, Capacitor, 0.47uf	1

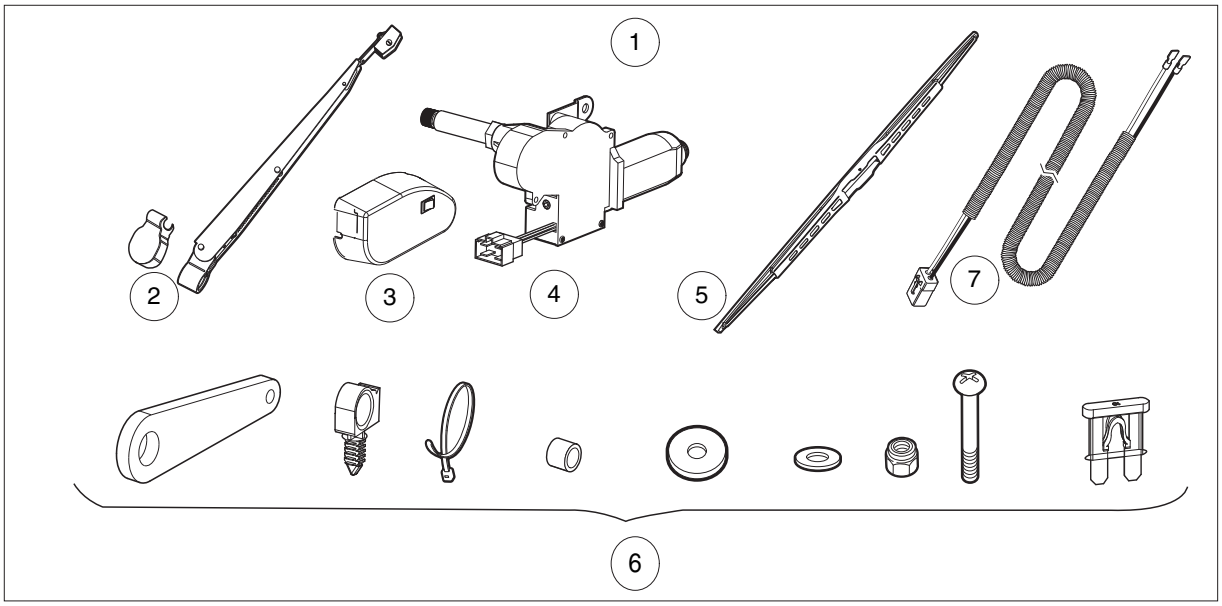

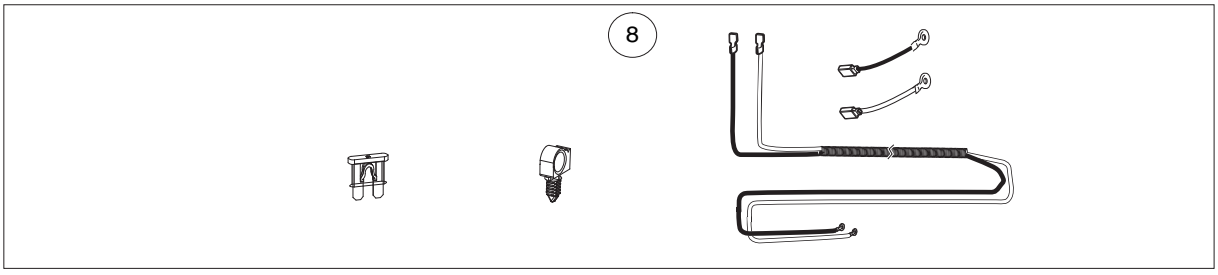

001190-001

CAB – ELECTRICAL, WINDSHIELD WIPER

ITEM	PART NO.	DESCRIPTION	QTY
		1 2 3 4	
1	105098001	Cab, Front Wiper Kit (includes items 2 through 7)	1
2	104000901	Wiper Arm, Modified	1
3	104003501	Cover, Wiper Mtr & Switch Asm	1
4	105180001	Wiper Motor, 85 Deg	1
5	105180101	Wiper Blade 18 inch	1
6	105180201	Hardware Kit, Wiper	1
7	105183701	Harness, Wiper	1
8	105098002	Cab, Wiper Power Harness Kit (w/o Console)	1

Note: Vehicles not equipped with an overhead console will require kit part number 105098001, Front Wiper Kit, and 105098002, Cab Wiper Power Harness Kit. Vehicles equipped with an overhead console are wired for wiper power and require only the 105098001, Front Wiper Kit.

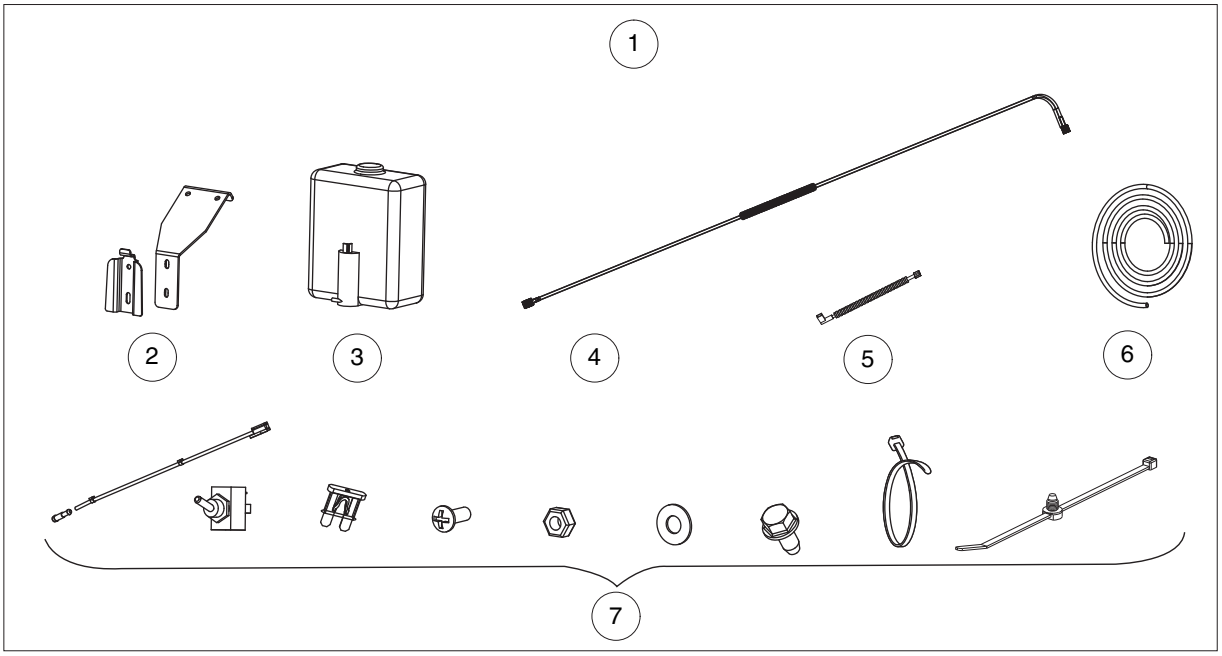

001189-001

CAB – ELECTRICAL, WINDSHIELD WASHER

ITEM	PART NO.	DESCRIPTION	QTY
		1 2 3 4	
1	105098101	Cab, Front Wiper, Washer Kit (includes items 2 through 7)	1
2	105180301	Washer Tank Mount Plate	1
3	105180401	Wash Tank Asm	1
4	105180501	Wire Harness Sw To Pump	1
5	105180601	Wire Harness Fb To Sw	1
6	105180701	Hose 18x31x17ft	1
7	105180801	Hardware Kit, Wiper Washer	1

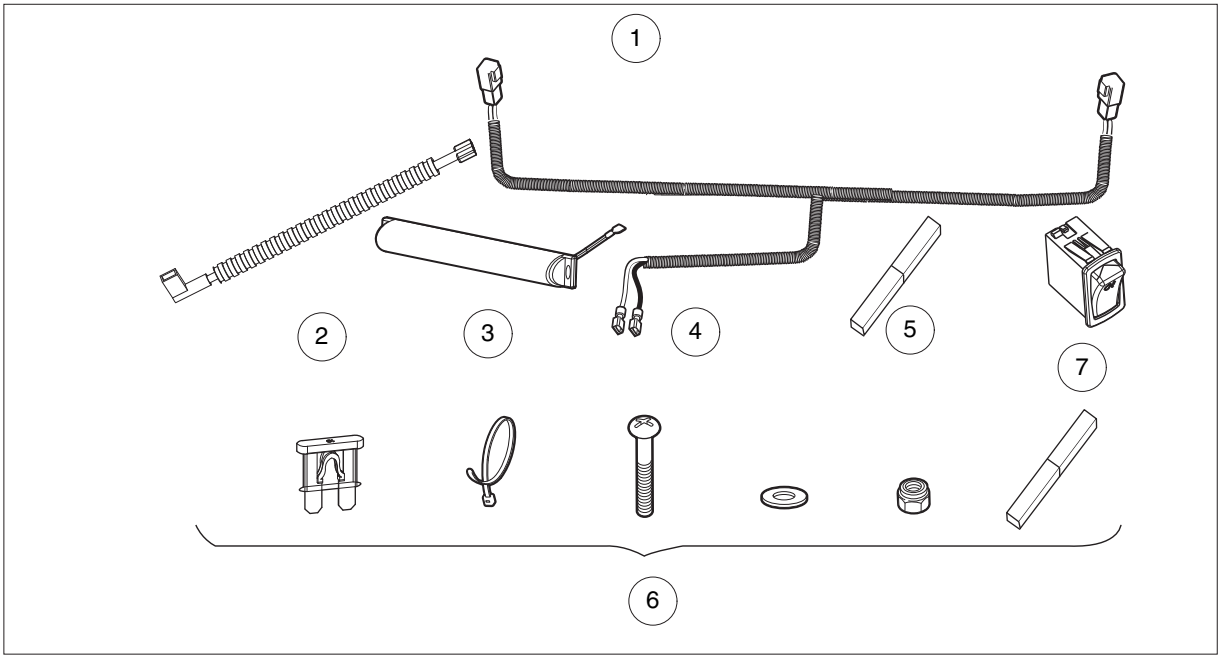

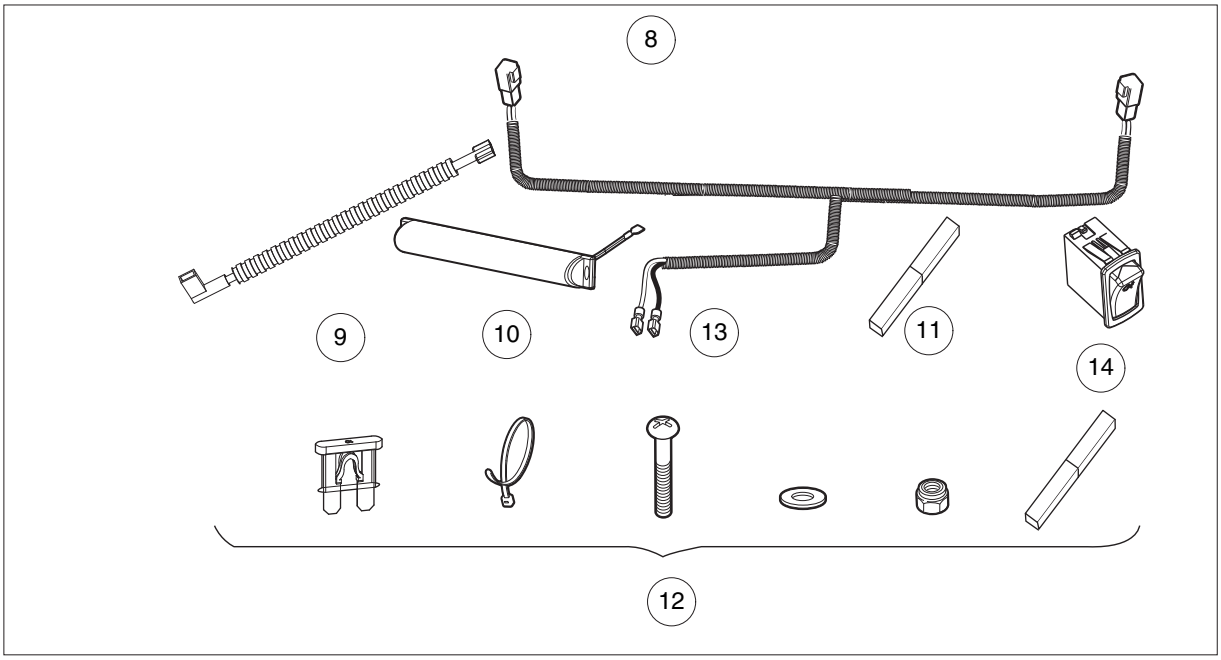

001191-001

CAB – ELECTRICAL, WORK LIGHTS

ITEM	PART NO.	DESCRIPTION	QTY
		1 2 3 4	
1	105098201	Cab, Front Work Light Kit (includes items 2 through 7)	1
2	105180601	Wire Harness Fb To Sw	1
3	105180901	Cab Work Light Led	2
4	105181001	Wire Harn Front Wl	1
5	105181101	Work Light Tape	2
6	105181301	Hardware Kit, Work Light	1
7	105183601	Switch, Rocker, Front Work Light	1
8	105098301	Cab, Rear Work Light Kit (includes items 9 through 14)	1
9	105180601	Wire Harness Fb To Sw	1
10	105180901	Cab Work Light Led	2
11	105181101	Work Light Tape	2
12	105181301	Hardware Kit, Work Light	1
13	105181401	Wire Harn Rear Wl	1
14	105181501	Rocker Rear Wl	1

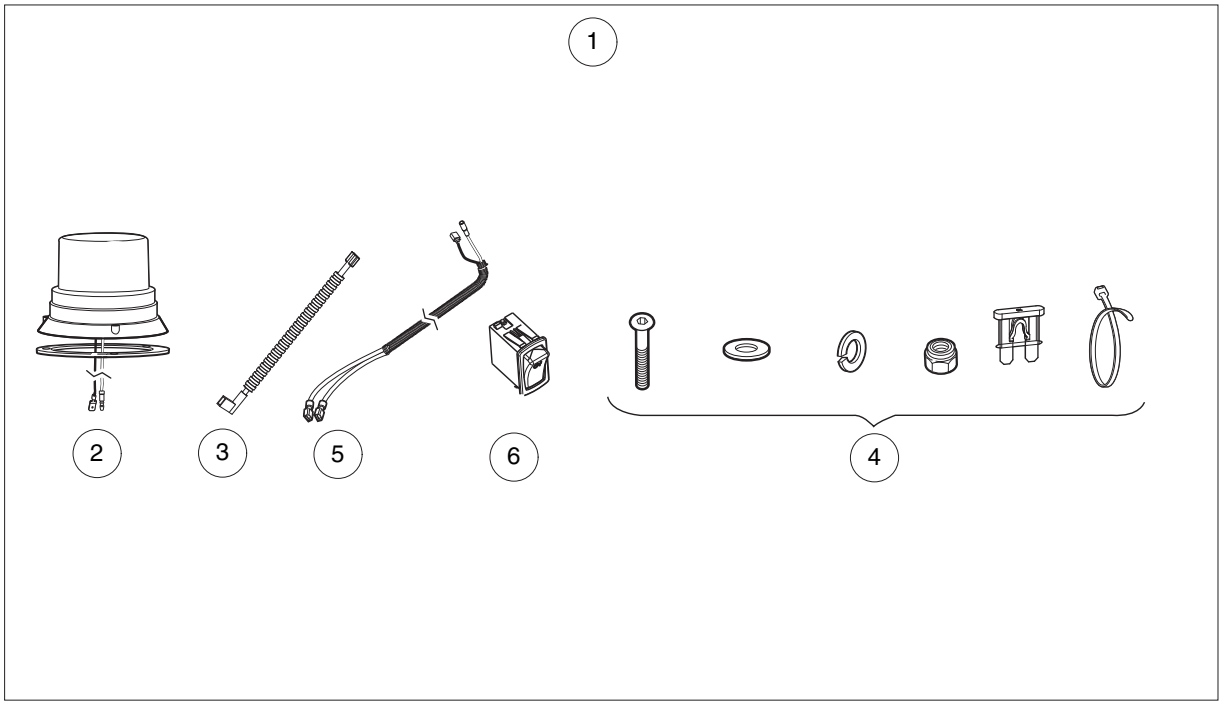

001192-001

CAB – ELECTRICAL, WARNING BEACON

ITEM	PART NO.	DESCRIPTION	QTY
		1 2 3 4	
1	105098401	Cab, Warning Beacon Kit (includes items 2 through 6)	1
2	104002101	Light, Strobe, Amber	1
3	105180601	Wire Harness Fb To Sw	1
4	105181201	Hardware Kit, Beacon Kit	1
5	105181601	Wire Harness Sw To Beac	1
6	105183801	Rocker Beacon	1

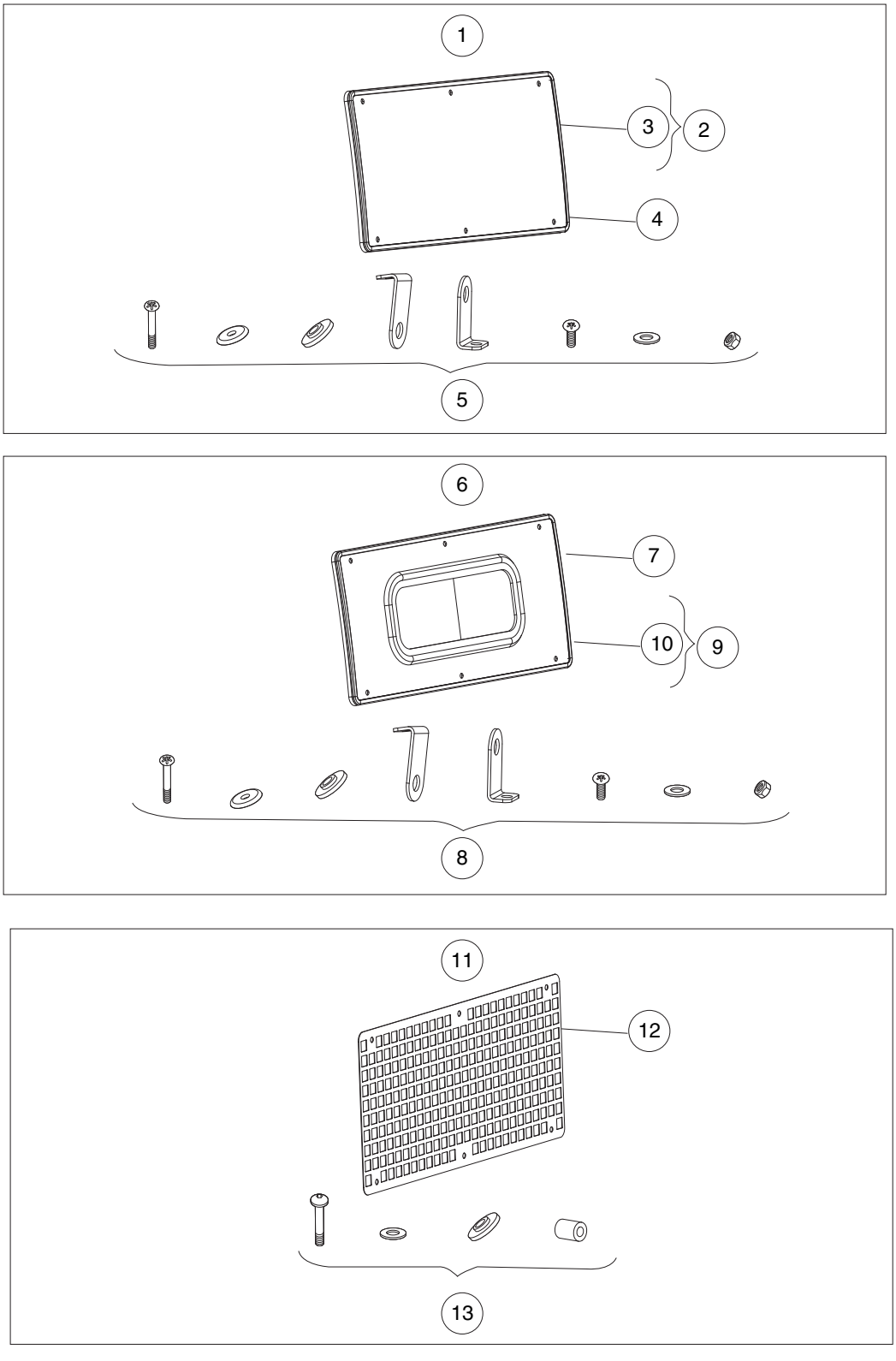

001185-001

CAB – REAR WINDOW

ITEM	PART NO.	DESCRIPTION	QTY
		1 2 3 4	
1	105097601	Cab, Rear Window Kit (includes items 2 through 5)	1
2	105178501	Rear Window W/ Seal (includes item 3)	1
3	105178601	Seal, Rubber Rear Window	1
4	105178601	Seal, Rubber Rear Window	1
5	105178701	Hardware Kit, Rear Window	1
6	105097701	Cab, Rear Window, Slider Kit (includes items 7 through 9)	1
7	105178601	Seal, Rubber Rear Window	1
8	105178701	Hardware Kit, Rear Window	1
9	105178801	Rear Slider Window W/ Seal (includes item 10)	1
10	105178601	Seal, Rubber Rear Window	1
11	105097801	Cab, Rear Window, Screen Kit (includes items 12 and 13)	1
12	105176901	Rear Screen	1
13	105178901	Hardware Kit, Rear Screen	1

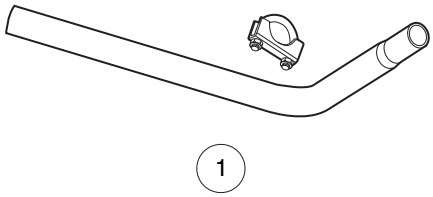

001199-001

ITEM	PART NO.	DESCRIPTION	QTY
		1 2 3 4	
1	105143401	Kit, Exhaust Extension, 400cc	1

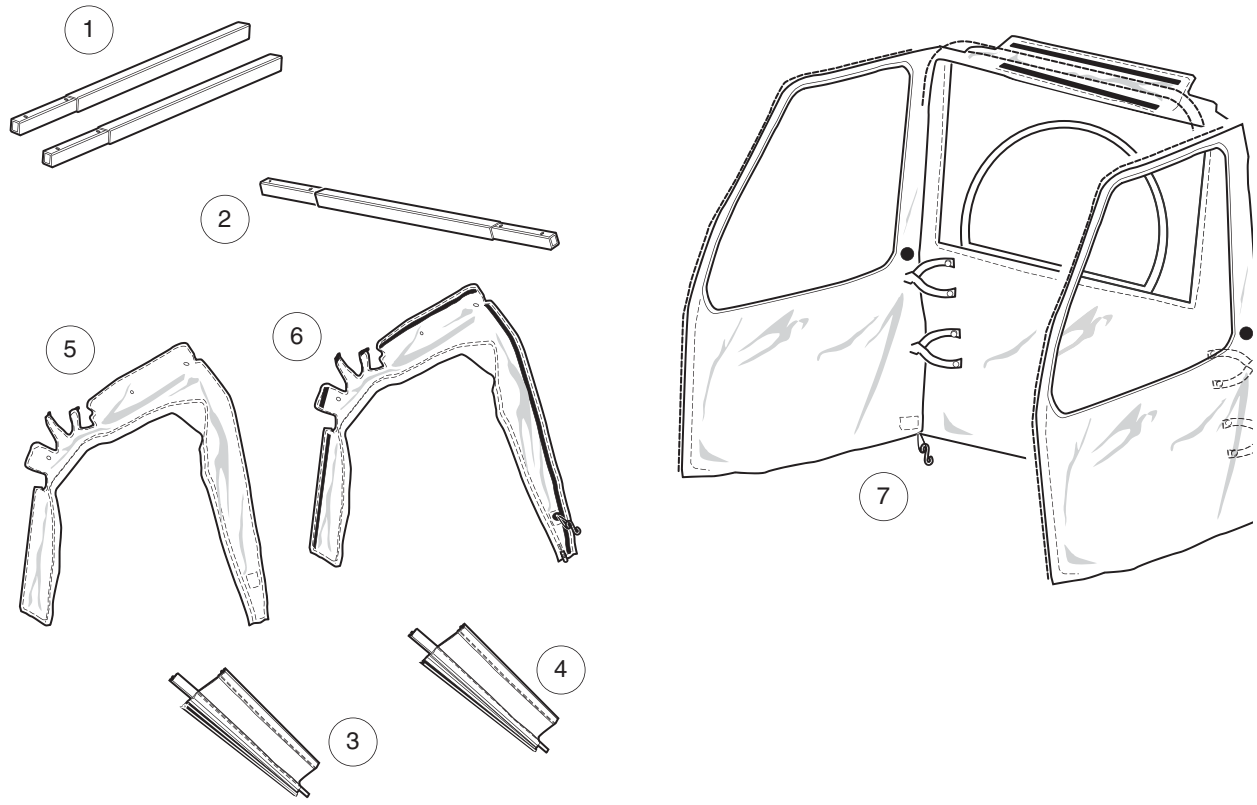
1
2
5
6
4
3
7

ITEM	PART NO.	DESCRIPTION	QTY
		1 2 3 4	
1	105124301	Kit, Enclosure, White	1
2	105124302	Kit, Enclosure, Beige	1
3	105124401	Kit, Enclosure, Gray	1
4	105124501	Kit, Enclosure, Black	1

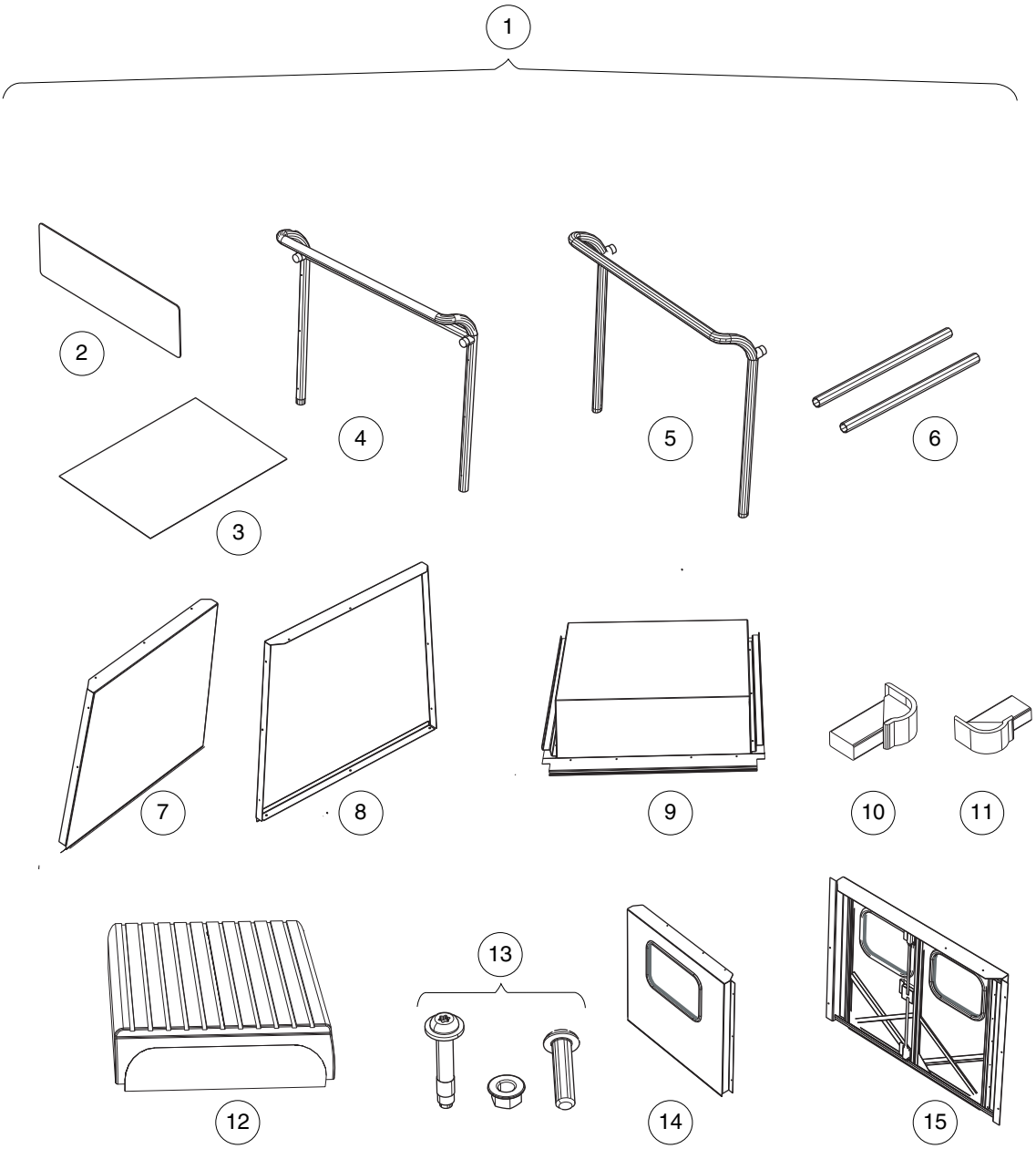

001173-001

VAN BOX – GRAY

ITEM	PART NO.	DESCRIPTION	QTY
		1 2 3 4	
1	105158702	Kit, Van Box, Med, Gray (includes items 2 through 15)	1
2	105237601	Decal, Warn Rollover Van Box	1
3	105237701	Kit, Decal, Vanbox, Roll -all	1
4	105238001	Asm, Rear Tubing, Van	1
5	105238101	Asm, Front Tubing, Van	1
6	105238701	Tubing, 500, Van	1
7	105238802	Panel Lh, 500, Van, Gray	1
8	105238902	Panel Rh, 500, Van, Gray	1
9	105239002	Panel Attic, 500, Van, Gray	1
10	105239101	Bumpers Front, Van	1
11	105239201	Bumpers Rear, Van	1
12	105239301	Roof 500, Van, White	1
13	105239401	Hardware, 500, Van	1
14	105241002	Panel Ft W Window, Van, Gray	1
15	105241102	Panel Rr W Window, Van, Gray	1

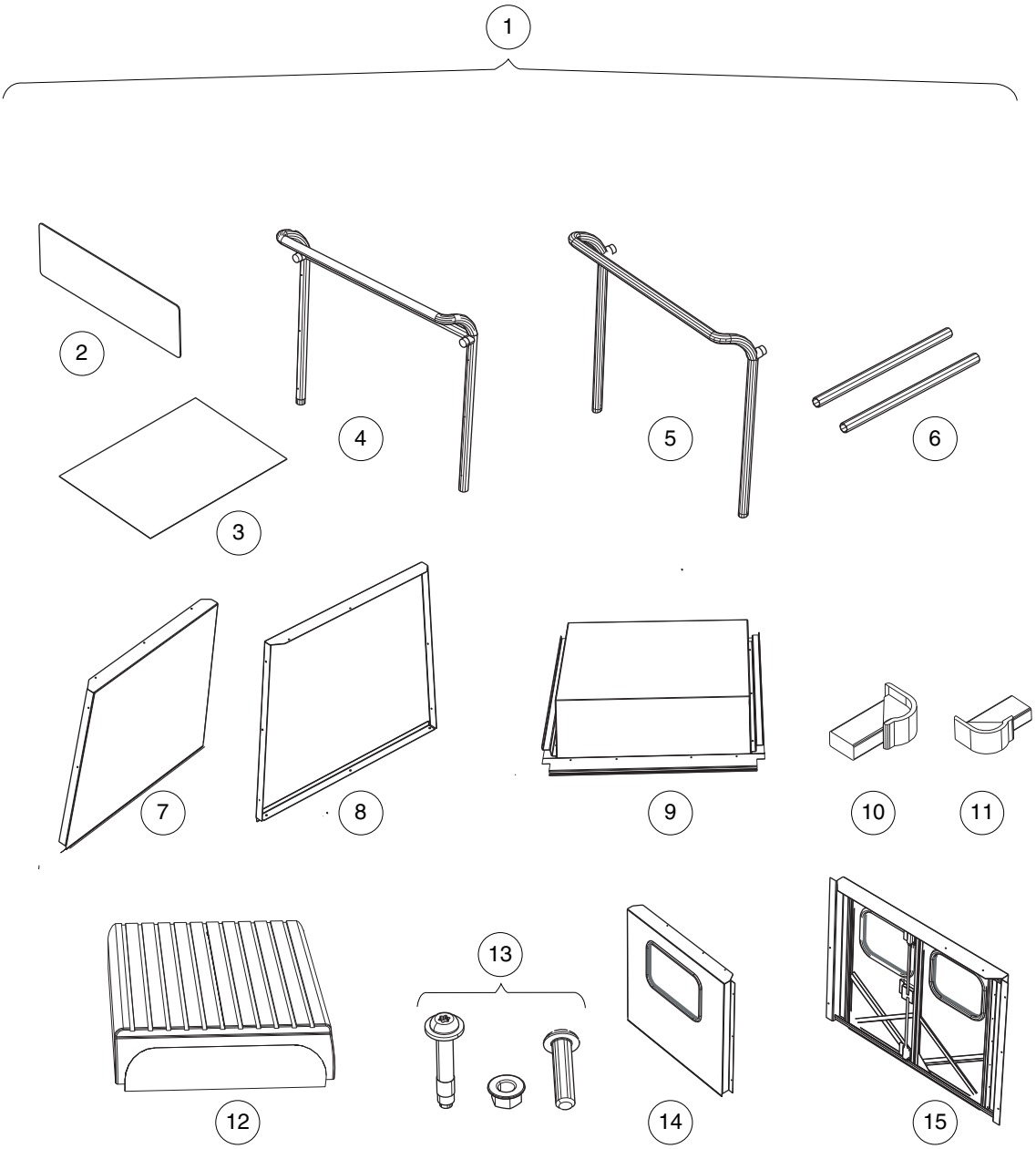

001173-001

VAN BOX – WHITE

ITEM	PART NO.	DESCRIPTION	QTY
		1 2 3 4	
1	105158701	Kit, Van Box, Med, White (includes items 2 through 15)	1
2	105237601	Decal, Warn Rollover Van Box	1
3	105237701	Kit, Decal, Vanbox, Roll -all	1
4	105238001	Asm, Rear Tubing, Van	1
5	105238101	Asm, Front Tubing, Van	1
6	105238701	Tubing, 500, Van	1
7	105238801	Panel Lh, 500, Van, White	1
8	105238901	Panel Rh, 500, Van, White	1
9	105239001	Panel Attic, 500, Van, White	1
10	105239101	Bumpers Front, Van	1
11	105239201	Bumpers Rear, Van	1
12	105239301	Roof 500, Van, White	1
13	105239401	Hardware, 500, Van	1
14	105241001	Panel Ft W Window, Van, White	1
15	105241101	Panel Rr W Window, Van, White	1

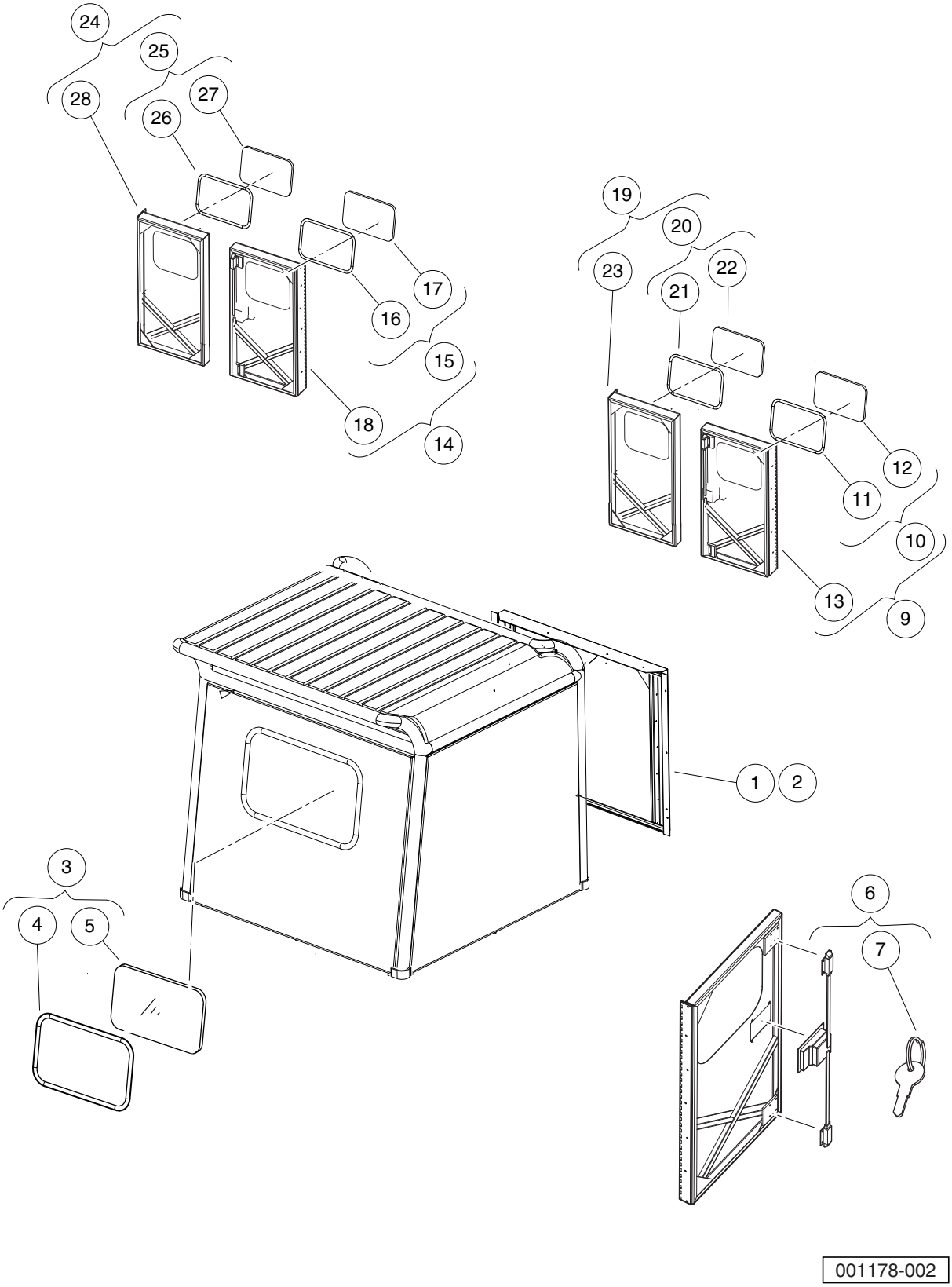
24
25
28
27
26
17
16
15
18
14
19
20
23
22
21
12
11
10
13
9
1
2
3
4
5
6
7
001178-002

VAN BOX, MEDIUM – SERVICE PARTS

ITEM	PART NO.	DESCRIPTION	QTY
		1 2 3 4	
1	105237801	Panel Rr, w/o Doors, Van, White	1
2	105237802	Panel Rr, w/o Doors, Van, Gray	1
3	105238301	Asm, Window, Frt Panel, Van (includes items 4 and 5)	1
4	105241401	Window Seal, Frt Panel, Van	1
5	105241501	Window Glass, Frt Panel, Van	1
6	105238603	Lock Mechanism, Door, Van (includes item 7)	1
7	105238604	Key, Van Box, 500, 700	1
8	105241401	Window Seal, Frt Panel, Van	1
9	105241601	Door, W Window, Lh, Van, White (includes items 10 through 13)	1
10	105238201	Asm, Window, Door, Van (includes items 11 and 12)	1
11	105241201	Window Seal, Door, Van	1
12	105241301	Window Glass, Door, Van	1
13	105238401	Door,w/o Window, Left, Van, White	1
14	105241602	Door, W Window, Lh, Van, Gray (includes items 15 through 18)	1
15	105238201	Asm, Window, Door, Van (includes items 16 and 17)	1
16	105241201	Window Seal, Door, Van	1
17	105241301	Window Glass, Door, Van	1
18	105238402	Door, w/o Window, Left, Van, Gray	1
19	105241701	Door, W Window, Rh, Van, White (includes items 20 through 23)	1
20	105238201	Asm, Window, Door, Van (includes items 21 and 22)	1
21	105241201	Window Seal, Door, Van	1
22	105241301	Window Glass, Door, Van	1
23	105238501	Door, w/o Window, Right, Van, White	1
24	105241702	Door, W Window, Rh, Van, Gray (includes items 25 through 28)	1
25	105238201	Asm, Window, Door, Van (includes items 26 and 27)	1
26	105241201	Window Seal, Door, Van	1
27	105241301	Window Glass, Door, Van	1
28	105238502	Door, w/o Window, Right, Van, Gray	1

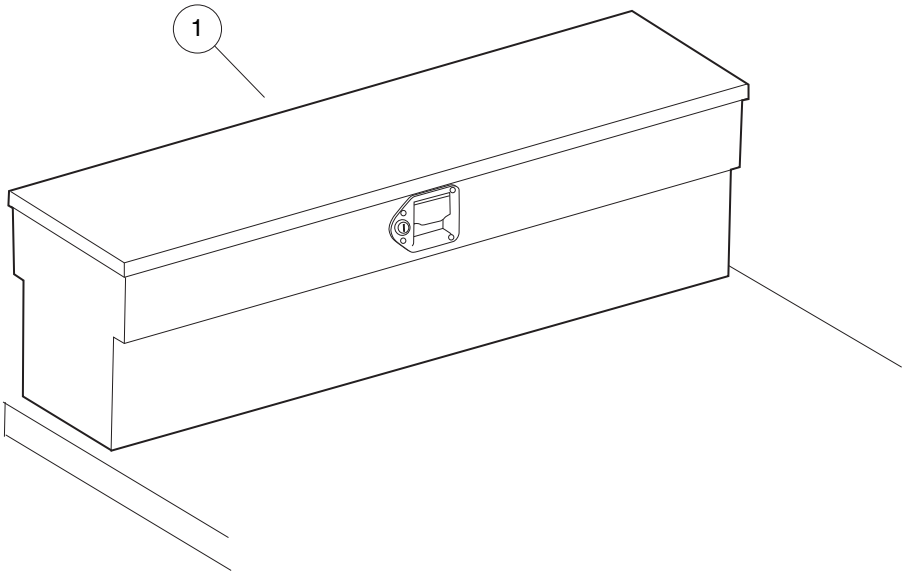

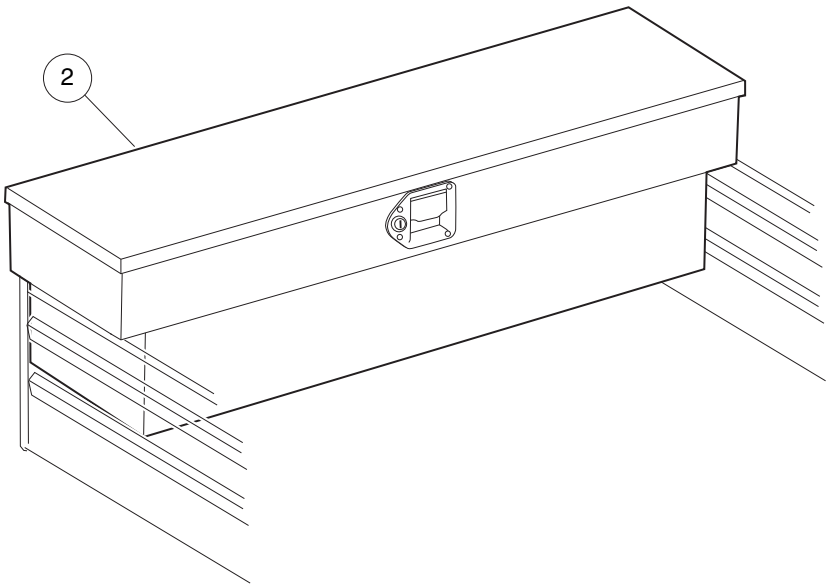

001157-001

TOOLBOXES

ITEM	PART NO.	DESCRIPTION	QTY
		1 2 3 4	
1	101837401	Toolbox, Flat Bed	1
2	101837502	Toolbox, Box Bed	1

1

G

E

WHEELS AND TIRES

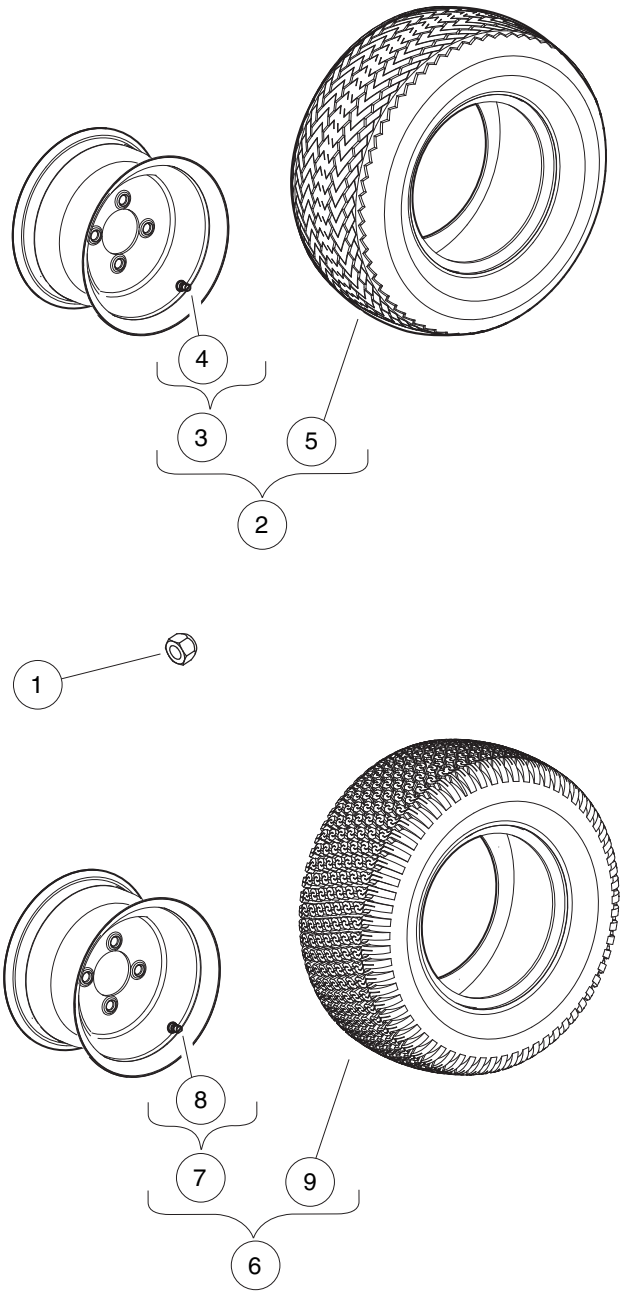

001320-001

ITEM	PART NO.	DESCRIPTION	QTY
		1 2 3 4	
1	1010984	.500-20 Unf Lug Nut	16
2	105078809	Asm,whl,hn1,20x10-10,6pl (includes items 3 through 5)	4
3	105079204	Whl,10x6", Gray, 0 Os,rr W/ Vs (includes item 4)	1
4	105078901	Valve Stem, Kenda, Tr 412	1
5	105079301	Tire, Hole-n-1, 20x10-10, 6pl	1
6	105078810	Asm,whl,st,20x10-10,6pl (includes items 7 through 9)	4
7	105079204	Whl,10x6", Gray, 0 Os,rr W/ Vs (includes item 8)	1
8	105078901	Valve Stem, Kenda, Tr 412	1
9	105079401	Tire, Superturf, 20x10-10, 6pl	1

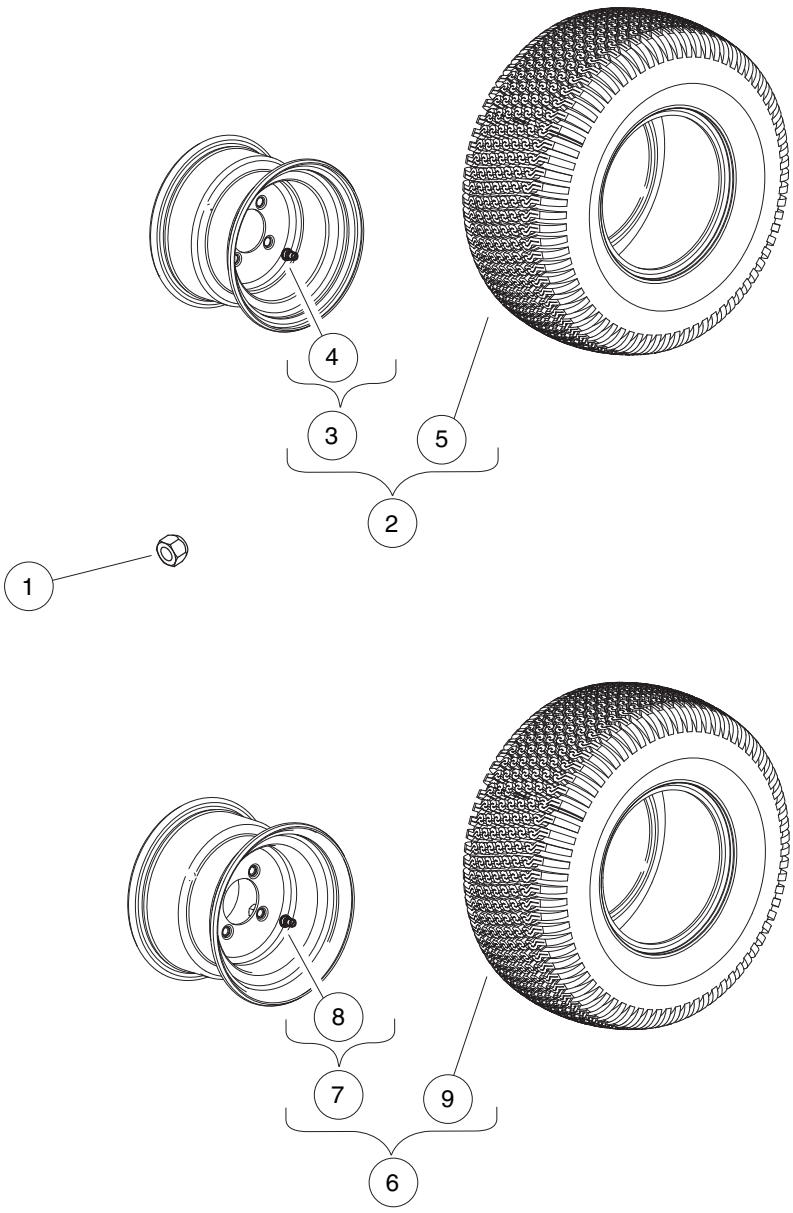

001321-001

ITEM	PART NO.	DESCRIPTION	QTY
		1 2 3 4	
1	1010984	.500-20 Unf Lug Nut	16
2	105078805	Asm,whl,st,22x10-10,4pl,front (includes items 3 through 5)	2
3	105079202	Whl,10x7", Gray, 0 Os W/ Vs (includes item 4)	1
4	105078901	Valve Stem, Kenda, Tr 412	1
5	105079701	Tire, Superturf, 22x10-10, 4pl	1
6	105078813	Asm, Whl, ST, 22X10-10, 4PL Rear (includes items 7 through 10)	2
7	105079205	Whl, 10X7, Gray, 1 NOS, W/VS (includes item 8)	2
8	105078901	Valve Stem, Kenda, Tr 412	1
9	105079701	Tire, Superturf, 22x10-10, 4pl	2
10	105216602	Decal, Wheel, K500, Rear	2

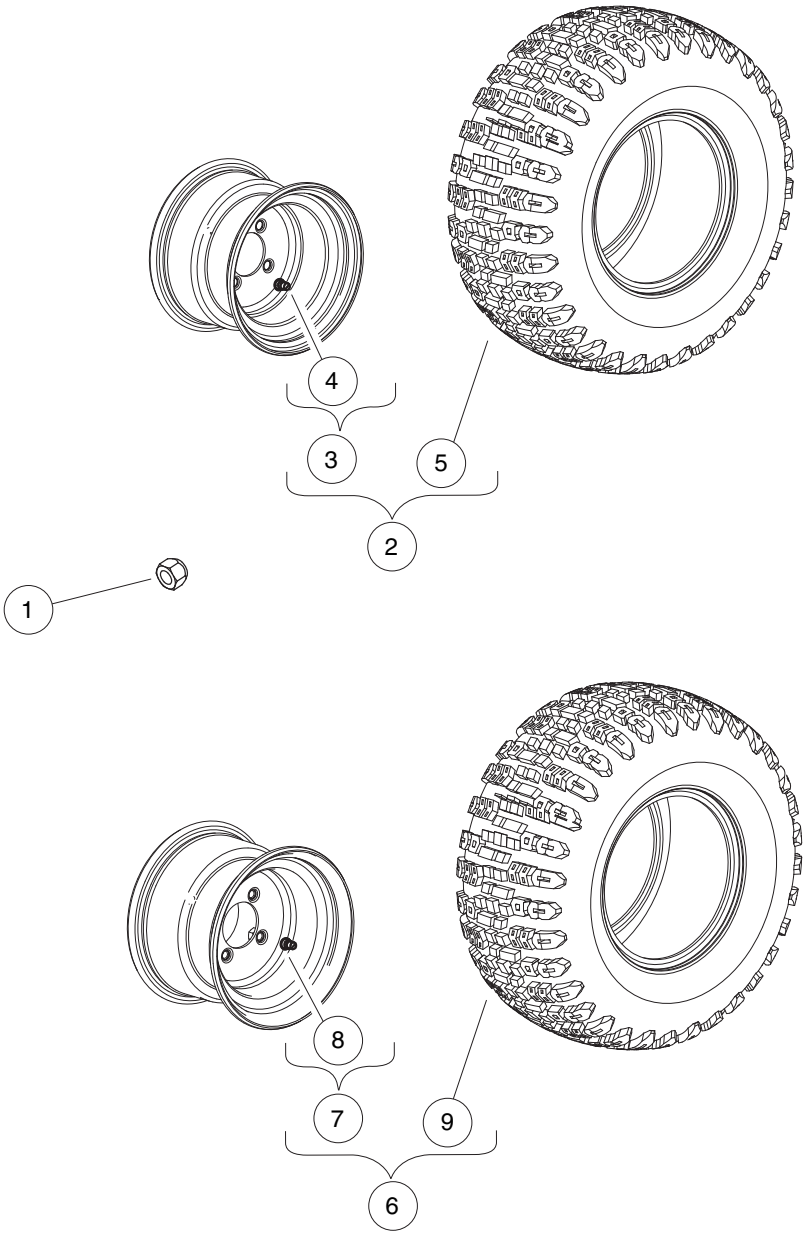

001323-001

WHEELS AND TIRES, OFF-ROAD – CARRYALL 550

ITEM	PART NO.	DESCRIPTION	QTY
		1 2 3 4	
1	1010984	.500-20 Unf Lug Nut	16
2	105078807	Asm,whl,or,22x10-10,6pl,front (includes items 3 through 5)	2
3	105079202	Whl,10x7", Gray, 0 Os W/ Vs (includes item 4)	1
4	105078901	Valve Stem, Kenda, Tr 412	1
5	105079801	Tire, Offroad, 22x10-10, 6pl	1
6	105078814	Asm, WHL, OR, 22X10-10, 4PL, Rear (includes items 7 through 10)	2
7	105079205	Whl, 10X7, Gray, 1 NOS, W/VS (includes item 8)	2
8	105078901	Valve Stem, Kenda, Tr 412	1
9	105079801	Tire, Offroad, 22x10-10, 6pl	2
10	105216604	Decal, Wheel, K502, Rear	2

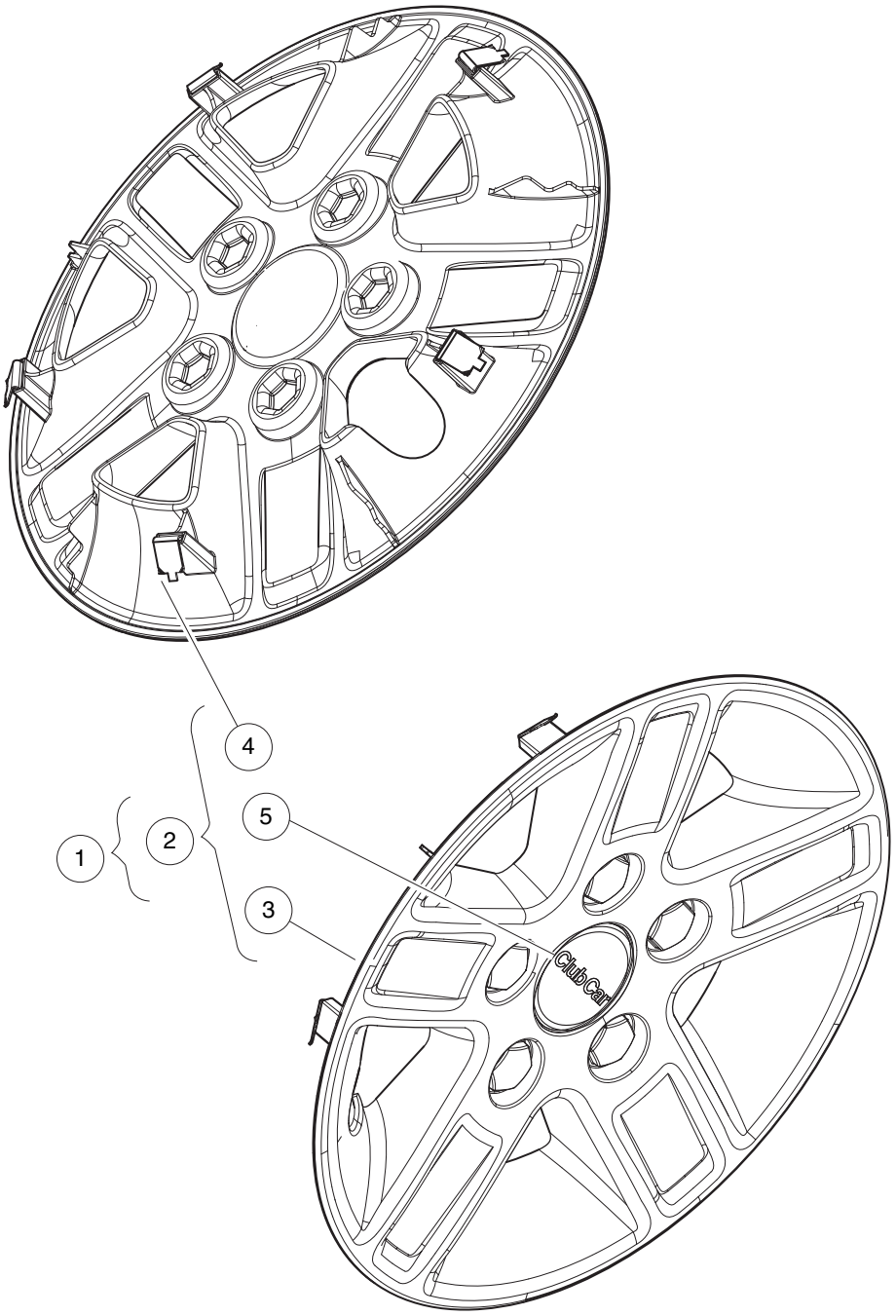

001350-002

WHEEL COVERS

ITEM	PART NO.	DESCRIPTION	QTY
		1 2 3 4	
1	105106501	Kit, Wheel Cover, 10x6" (includes item 2)	1
2	105106301	Asm, Whl Cover, 5 Spoke, 10x6" (includes items 3 through 5)	4
3	N/A	Wheel Cover, 5 Spoke, 10x7"	1
4	105106101	Wheel Cover, Clip	5
5	105106201	Decal, Wheel Cover, Club Car	1

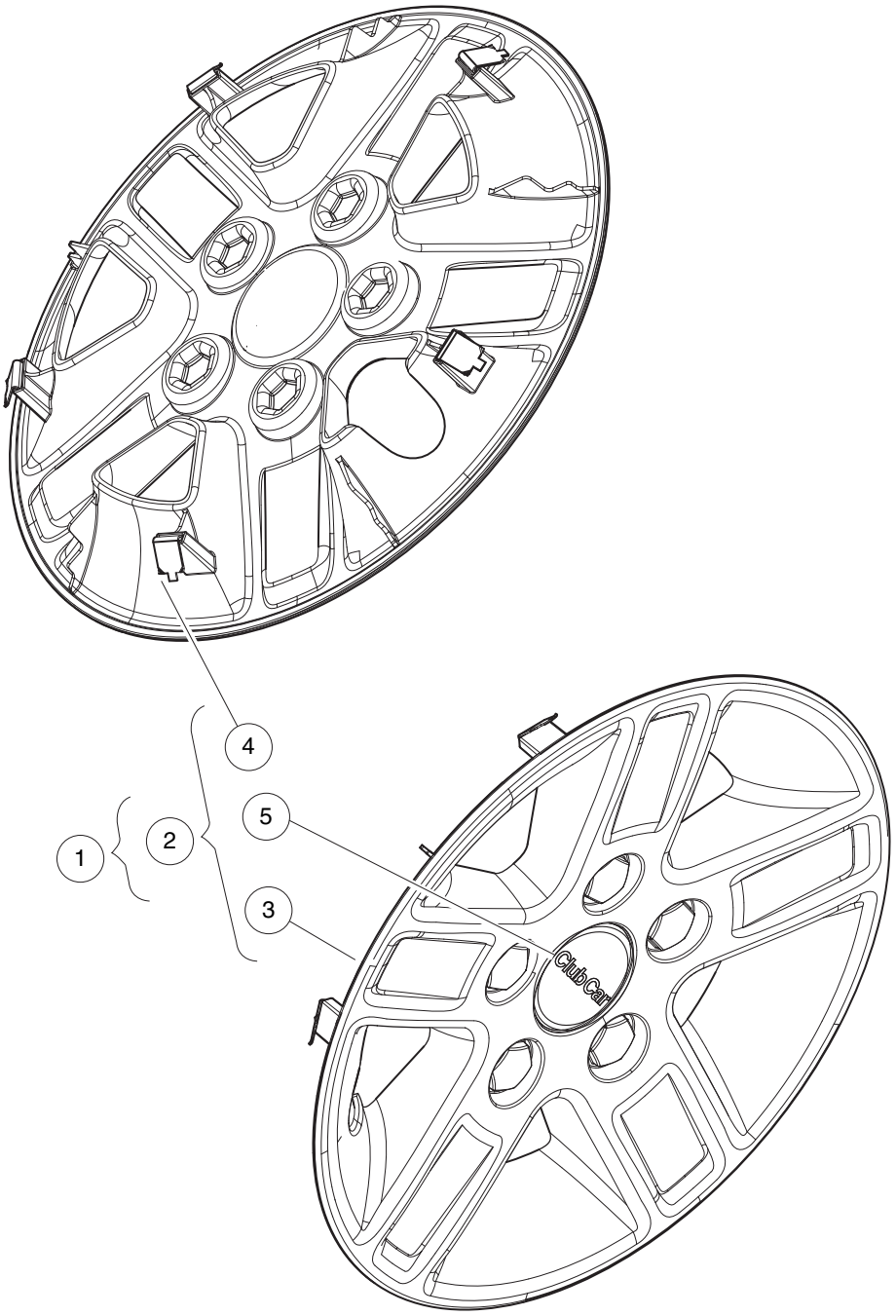

001350-002

WHEEL COVERS – CARRYALL 550

ITEM	PART NO.	DESCRIPTION	QTY
		1 2 3 4	
1	105106502	Kit, Wheel Cover, 10x7" (includes item 2)	1
2	105106302	Asm, Whl Cover, 5 Spoke, 10x7" (includes items 3 through 5)	4
3	N/A	Wheel Cover, 5 Spoke, 10x7"	1
4	105106101	Wheel Cover, Clip	5
5	105106201	Decal, Wheel Cover, Club Car	1

2
G
E

DECALS

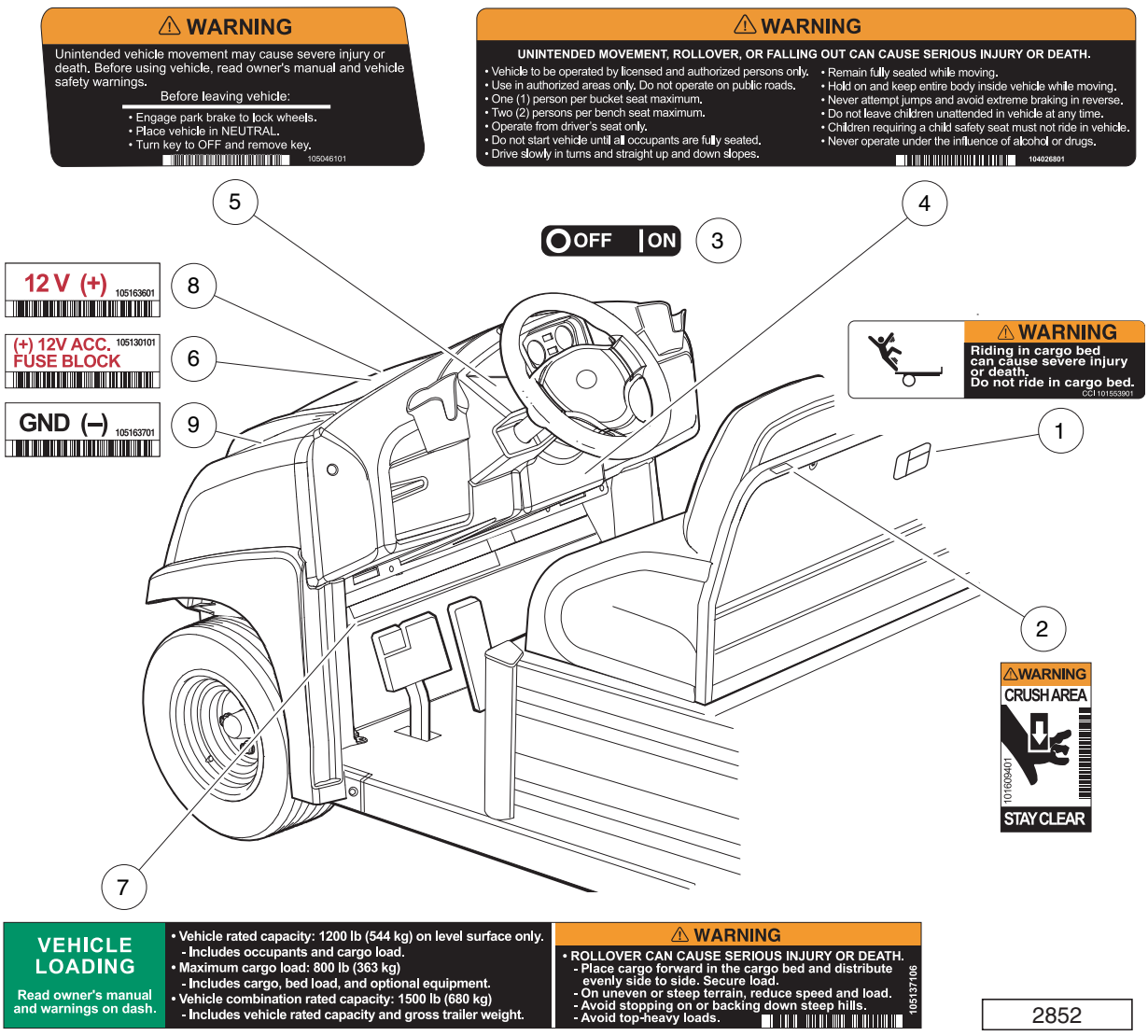
WARNING
Unintended vehicle movement may cause severe injury or death. Before using vehicle, read owner's manual and vehicle safety warnings.
Before leaving vehicle:
• Engage park brake to lock wheels.
• Place vehicle in NEUTRAL.
• Turn key to OFF and remove key.
105046101
WARNING
UNINTENDED MOVEMENT, ROLLOVER, OR FALLING OUT CAN CAUSE SERIOUS INJURY OR DEATH.
• Vehicle to be operated by licensed and authorized persons only.
• Use in authorized areas only. Do not operate on public roads.
• One (1) person per bucket seat maximum.
• Two (2) persons per bench seat maximum.
• Operate from driver's seat only.
• Do not start vehicle until all occupants are fully seated.
• Drive slowly in turns and straight up and down slopes.
• Remain fully seated while moving.
• Hold on and keep entire body inside vehicle while moving.
• Never attempt jumps and avoid extreme braking in reverse.
• Do not leave children unattended in vehicle at any time.
• Children requiring a child safety seat must not ride in vehicle.
• Never operate under the influence of alcohol or drugs.
104026801
5
4
OFF ON
3
12 V (+) 105163601
8
(+) 12V ACC. FUSE BLOCK 105130101
6
GND (–) 105163701
9
WARNING
Riding in cargo bed can cause severe injury or death.
Do not ride in cargo bed.
CCI 101553901
1
2
WARNING
CRUSH AREA
1016009401
STAY CLEAR
7
VEHICLE LOADING
Read owner's manual and warnings on dash.
• Vehicle rated capacity: 1200 lb (544 kg) on level surface only.
- Includes occupants and cargo load.
• Maximum cargo load: 800 lb (363 kg)
- Includes cargo, bed load, and optional equipment.
• Vehicle combination rated capacity: 1500 lb (680 kg)
- Includes vehicle rated capacity and gross trailer weight.
WARNING
• ROLLOVER CAN CAUSE SERIOUS INJURY OR DEATH.
- Place cargo forward in the cargo bed and distribute evenly side to side. Secure load.
- On uneven or steep terrain, reduce speed and load.
- Avoid stopping on or backing down steep hills.
- Avoid top-heavy loads.
105137106
2852

DECALS – ELECTRIC CARRYALL 500

ITEM	PART NO.	DESCRIPTION	QTY
		1 2 3 4	
1	101553901	Decal, Bed Load Warning	1
2	101609401	Decal, Crush Area Warning	2
3	101825101	Decal, Off/On	1
4	104026801	Decal, Oc, Warning, Ca	1
5	105046101	Decal, Op, Instructions, Ca	1
6	105130101	Decal, Fuse Block, Acc, 12v	1
7	105137106	Decal, Veh Load, Ca500 4wb	1
8	105163601	Decal, 12v (+)	1
9	105163701	Decal, Gnd (-)	1

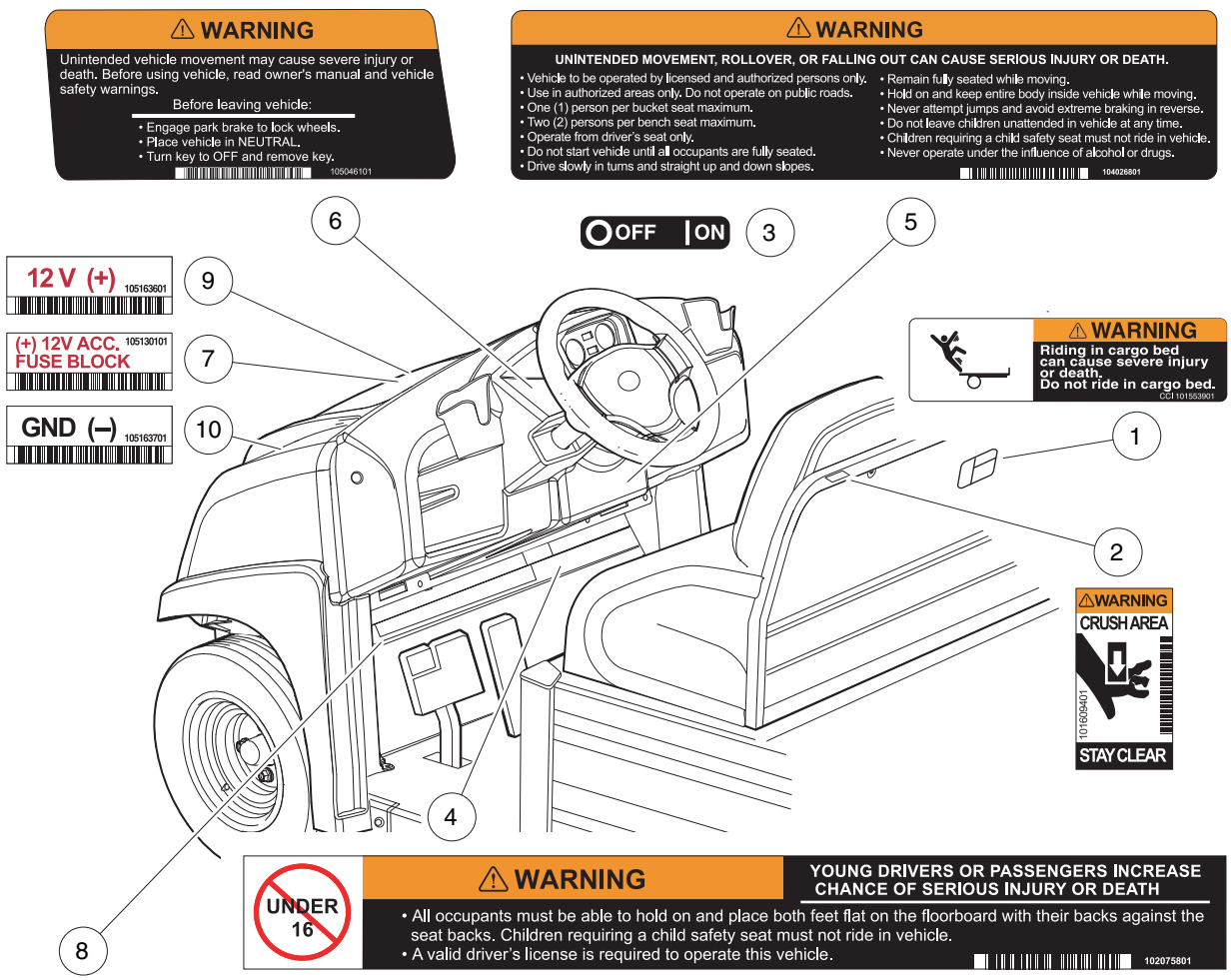
⚠ WARNING
Unintended vehicle movement may cause severe injury or death. Before using vehicle, read owner's manual and vehicle safety warnings.
Before leaving vehicle:
• Engage park brake to lock wheels.
• Place vehicle in NEUTRAL.
• Turn key to OFF and remove key.
105046101
⚠ WARNING
UNINTENDED MOVEMENT, ROLLOVER, OR FALLING OUT CAN CAUSE SERIOUS INJURY OR DEATH.
• Vehicle to be operated by licensed and authorized persons only.
• Use in authorized areas only. Do not operate on public roads.
• One (1) person per bucket seat maximum.
• Two (2) persons per bench seat maximum.
• Operate from driver's seat only.
• Do not start vehicle until all occupants are fully seated.
• Drive slowly in turns and straight up and down slopes.
• Remain fully seated while moving.
• Hold on and keep entire body inside vehicle while moving.
• Never attempt jumps and avoid extreme braking in reverse.
• Do not leave children unattended in vehicle at any time.
• Children requiring a child safety seat must not ride in vehicle.
• Never operate under the influence of alcohol or drugs.
104026801
12 V (+) 105163601
(+) 12V ACC. FUSE BLOCK 105130101
GND (–) 105163701
OFF ON
⚠ WARNING
Riding in cargo bed can cause severe injury or death.
Do not ride in cargo bed.
CCI 101553901
⚠WARNING
CRUSH AREA
STAY CLEAR
101609401
UNDER 16
⚠ WARNING
YOUNG DRIVERS OR PASSENGERS INCREASE CHANCE OF SERIOUS INJURY OR DEATH
• All occupants must be able to hold on and place both feet flat on the floorboard with their backs against the seat backs. Children requiring a child safety seat must not ride in vehicle.
• A valid driver's license is required to operate this vehicle.
102075801
VEHICLE LOADING
Read owner's manual and warnings on dash.
• Vehicle rated capacity: 900 lb (408 kg) on level surface only.
- Includes occupants and cargo load.
• Maximum cargo load: 500 lb (227 kg)
- Includes cargo, bed load, and optional equipment.
• Vehicle combination rated capacity: 900 lb (408 kg)
- Includes vehicle rated capacity and gross trailer weight.
⚠ WARNING
• ROLLOVER CAN CAUSE SERIOUS INJURY OR DEATH.
- Place cargo forward in the cargo bed and distribute evenly side to side. Secure load.
- On uneven or steep terrain, reduce speed and load.
- Avoid stopping on or backing down steep hills.
- Avoid top-heavy loads.
105137103
2873
1
2
3
4
5
6
7
8
9
10

DECALS – ELECTRIC CARRYALL 550

ITEM	PART NO.	DESCRIPTION	QTY
		1 2 3 4	
1	101553901	Decal, Bed Load Warning	1
2	101609401	Decal, Crush Area Warning	2
3	101825101	Decal, Off/On	1
4	102075801	Decal, Young Driver Warning	1
5	104026801	Decal, Oc, Warning, Ca	1
6	105046101	Decal, Op, Instructions, Ca	1
7	105130101	Decal, Fuse Block, Acc, 12v	1
8	105137103	Decal, Loading Ca 252	1
9	105163601	Decal, 12v (+)	1
10	105163701	Decal, Gnd (-)	1

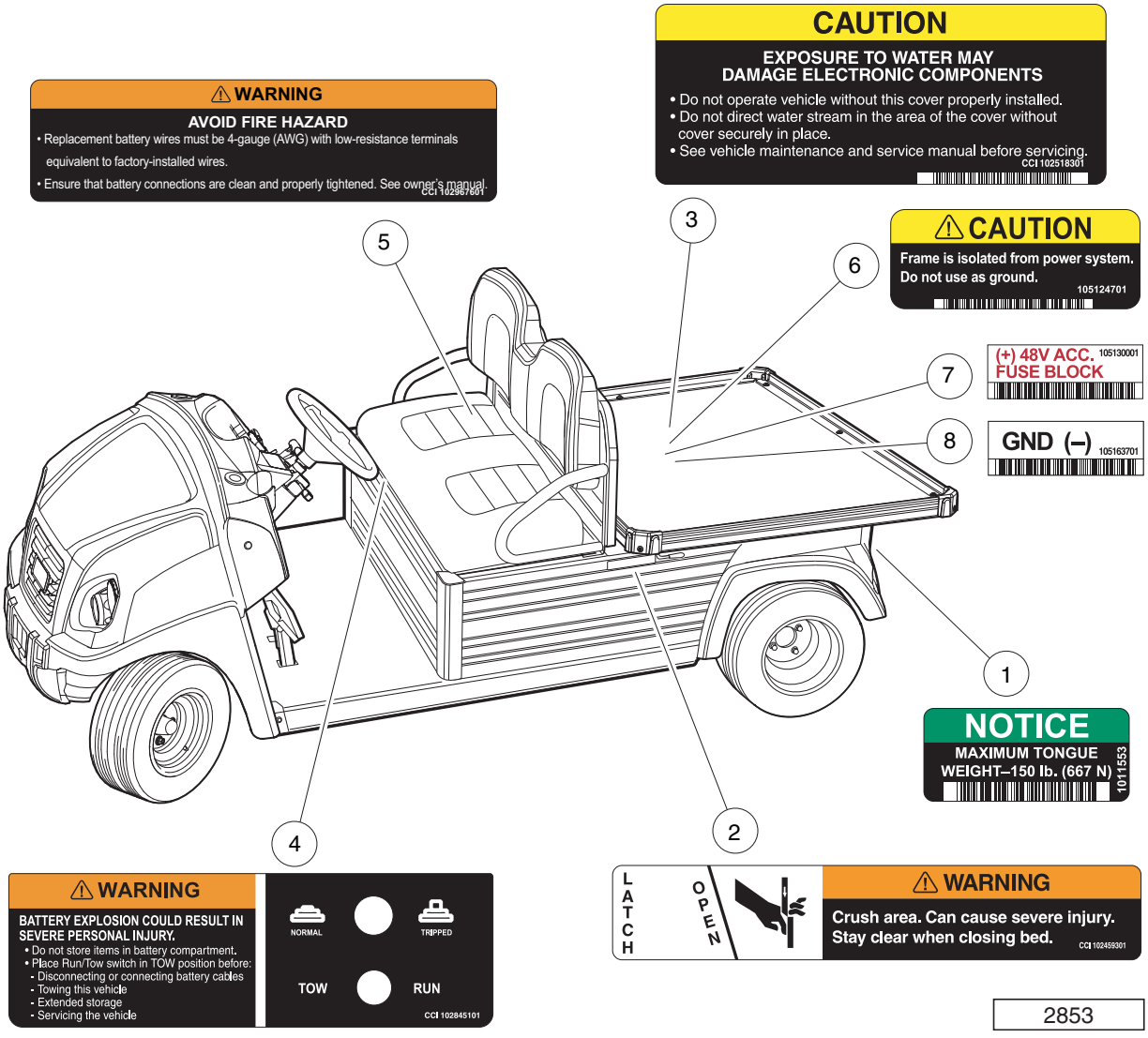
CAUTION
EXPOSURE TO WATER MAY DAMAGE ELECTRONIC COMPONENTS
• Do not operate vehicle without this cover properly installed.
• Do not direct water stream in the area of the cover without cover securely in place.
• See vehicle maintenance and service manual before servicing.
CCI 102518301
WARNING
AVOID FIRE HAZARD
• Replacement battery wires must be 4-gauge (AWG) with low-resistance terminals equivalent to factory-installed wires.
• Ensure that battery connections are clean and properly tightened. See owner's manual.
CCI 102967601
CAUTION
Frame is isolated from power system.
Do not use as ground.
105124701
(+) 48V ACC. FUSE BLOCK 105130001
GND (–) 105163701
NOTICE
MAXIMUM TONGUE WEIGHT–150 lb. (667 N)
1011553
WARNING
BATTERY EXPLOSION COULD RESULT IN SEVERE PERSONAL INJURY.
• Do not store items in battery compartment.
• Place Run/Tow switch in TOW position before:
- Disconnecting or connecting battery cables
- Towing this vehicle
- Extended storage
- Servicing the vehicle
NORMAL
TRIPPED
TOW
RUN
CCI 102845101
LATCH
OPEN
WARNING
Crush area. Can cause severe injury.
Stay clear when closing bed.
CCI 102459301
1
2
3
4
5
6
7
8
2853

DECALS – ELECTRIC CARRYALL 500/550, CONTINUED

ITEM	PART NO.	DESCRIPTION	QTY
		1 2 3 4	
1	1011553	Decal, Trailer Hitch	1
2	102459301	Decal, Bed Crush Area Warning	1
3	102518301	Decal, Caution, Electrical Component Cover	1
4	102845101	Decal, Tow Switch	1
5	102967601	Decal, Warning, 4 Gauge Wire	1
6	105124701	Decal, Caution, Not Use As Gnd	1
7	105130001	Decal, Fuse Block, Acc, 48v	1
8	105163701	Decal, Gnd (-)	1

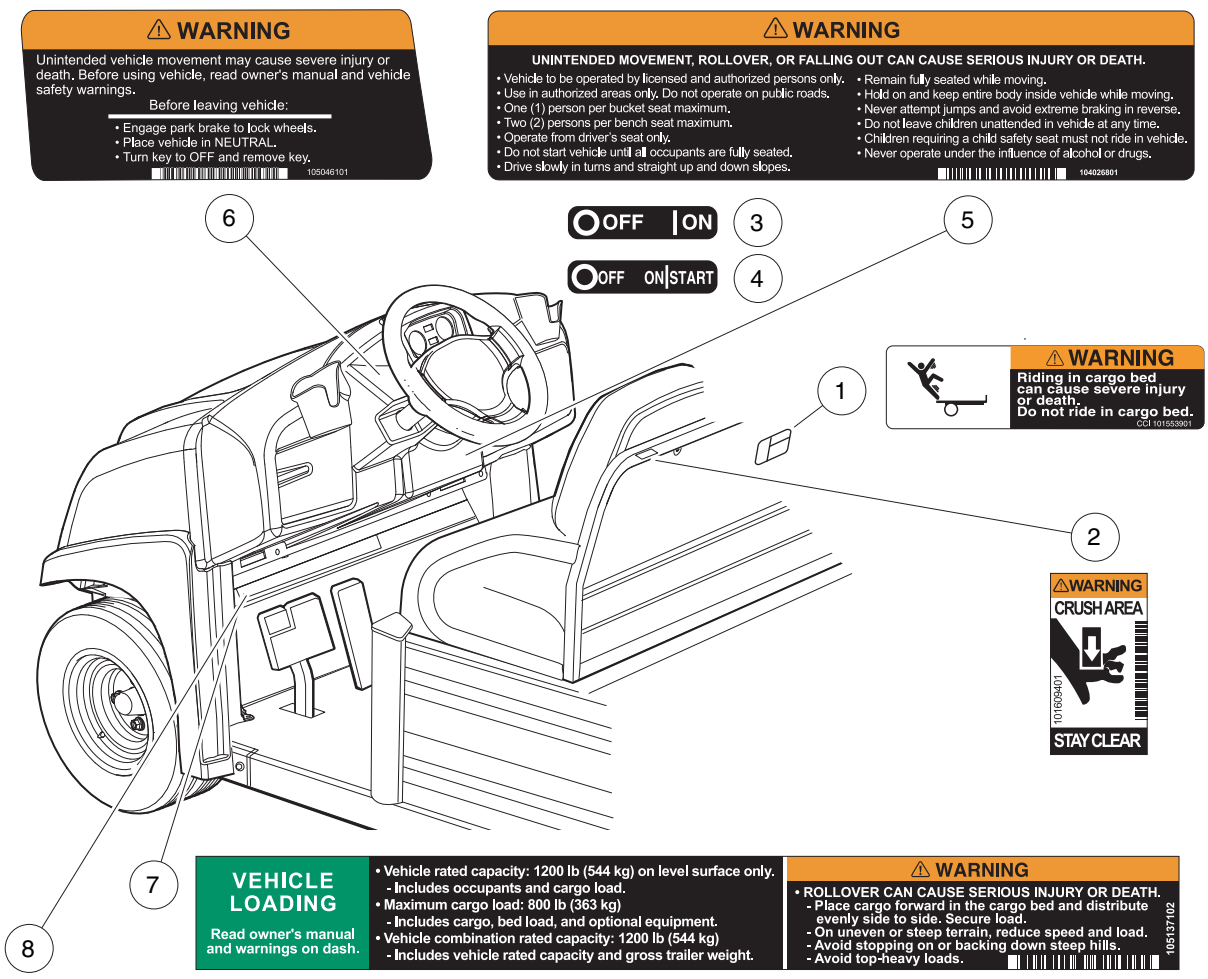
⚠ WARNING
Unintended vehicle movement may cause severe injury or death. Before using vehicle, read owner's manual and vehicle safety warnings.
Before leaving vehicle:
• Engage park brake to lock wheels.
• Place vehicle in NEUTRAL.
• Turn key to OFF and remove key.
105046101
⚠ WARNING
UNINTENDED MOVEMENT, ROLLOVER, OR FALLING OUT CAN CAUSE SERIOUS INJURY OR DEATH.
• Vehicle to be operated by licensed and authorized persons only.
• Use in authorized areas only. Do not operate on public roads.
• One (1) person per bucket seat maximum.
• Two (2) persons per bench seat maximum.
• Operate from driver's seat only.
• Do not start vehicle until all occupants are fully seated.
• Drive slowly in turns and straight up and down slopes.
• Remain fully seated while moving.
• Hold on and keep entire body inside vehicle while moving.
• Never attempt jumps and avoid extreme braking in reverse.
• Do not leave children unattended in vehicle at any time.
• Children requiring a child safety seat must not ride in vehicle.
• Never operate under the influence of alcohol or drugs.
104026801
6
OFF ON
3
OFF ON START
4
5
1
⚠ WARNING
Riding in cargo bed can cause severe injury or death.
Do not ride in cargo bed.
CCI 101553901
2
⚠WARNING
CRUSH AREA
101609401
STAY CLEAR
7
8
VEHICLE LOADING
Read owner's manual and warnings on dash.
• Vehicle rated capacity: 1200 lb (544 kg) on level surface only.
- Includes occupants and cargo load.
• Maximum cargo load: 800 lb (363 kg)
- Includes cargo, bed load, and optional equipment.
• Vehicle combination rated capacity: 1200 lb (544 kg)
- Includes vehicle rated capacity and gross trailer weight.
⚠ WARNING
• ROLLOVER CAN CAUSE SERIOUS INJURY OR DEATH.
- Place cargo forward in the cargo bed and distribute evenly side to side. Secure load.
- On uneven or steep terrain, reduce speed and load.
- Avoid stopping on or backing down steep hills.
- Avoid top-heavy loads.
105137102
VEHICLE LOADING
Read owner's manual and warnings on dash.
• Vehicle rated capacity: 1200 lb (544 kg) on level surface only.
- Includes occupants and cargo load.
• Maximum cargo load: 800 lb (363 kg)
- Includes cargo, bed load, and optional equipment.
• Vehicle combination rated capacity: 1500 lb (680 kg)
- Includes vehicle rated capacity and gross trailer weight.
⚠ WARNING
• ROLLOVER CAN CAUSE SERIOUS INJURY OR DEATH.
- Place cargo forward in the cargo bed and distribute evenly side to side. Secure load.
- On uneven or steep terrain, reduce speed and load.
- Avoid stopping on or backing down steep hills.
- Avoid top-heavy loads.
105137106
2856

DECALS – GASOLINE CARRYALL 500

ITEM	PART NO.	DESCRIPTION	QTY
		1 2 3 4	
1	101553901	Decal, Bed Load Warning	1
2	101609401	Decal, Crush Area Warning	1
3	101825101	Decal, Off/On	1
4	101825102	Decal, Off/On/Start	1
5	104026801	Decal, Oc, Warning, Ca	1
6	105046101	Decal, Op, Instructions, Ca	1
7	105137102	Decal, Veh Load, Ca500 2wb	1
8	105137106	Decal, Veh Load, Ca500 4wb	1

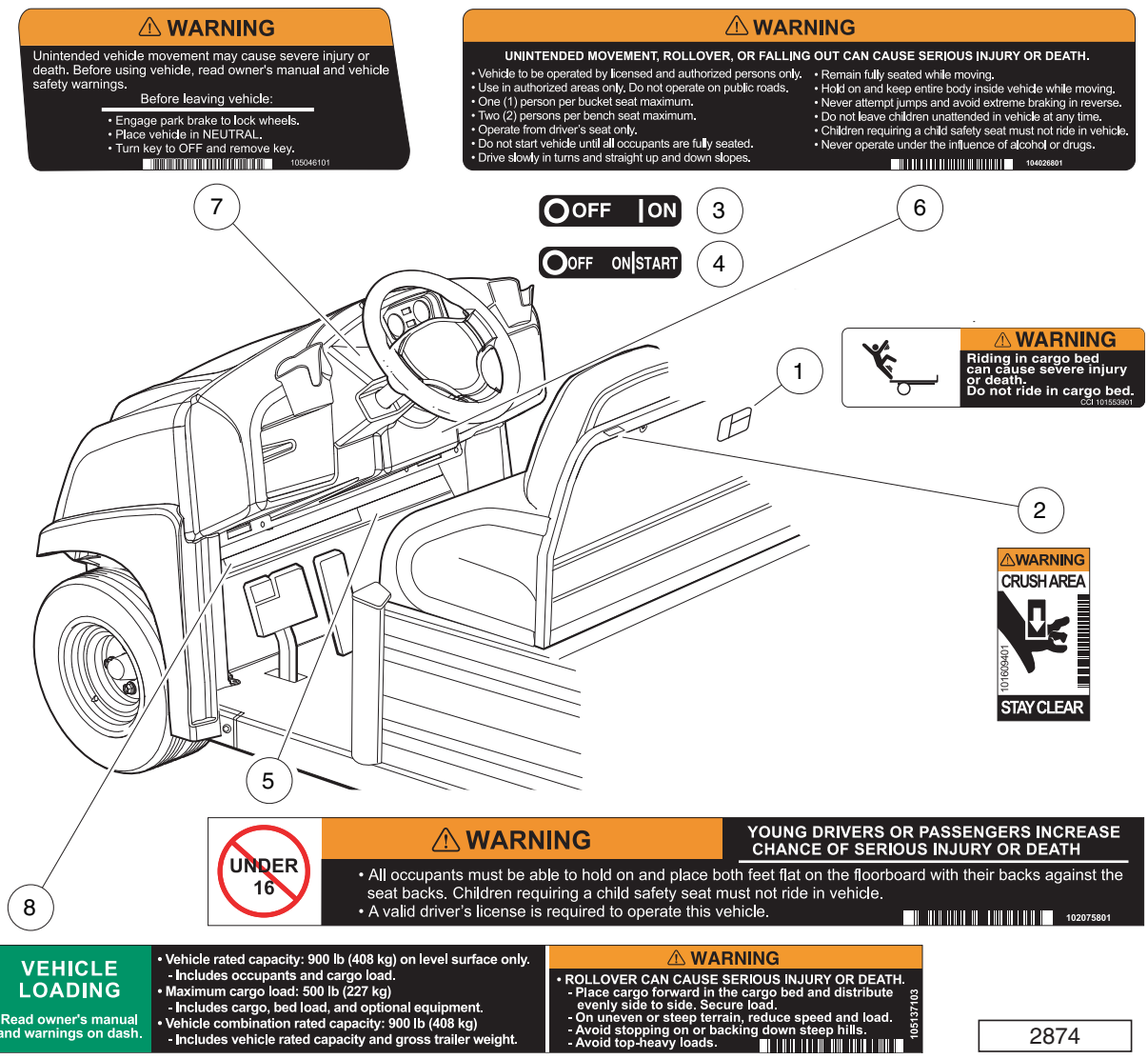
⚠ WARNING
Unintended vehicle movement may cause severe injury or death. Before using vehicle, read owner's manual and vehicle safety warnings.
Before leaving vehicle:
• Engage park brake to lock wheels.
• Place vehicle in NEUTRAL.
• Turn key to OFF and remove key.
105046101
⚠ WARNING
UNINTENDED MOVEMENT, ROLLOVER, OR FALLING OUT CAN CAUSE SERIOUS INJURY OR DEATH.
• Vehicle to be operated by licensed and authorized persons only.
• Use in authorized areas only. Do not operate on public roads.
• One (1) person per bucket seat maximum.
• Two (2) persons per bench seat maximum.
• Operate from driver's seat only.
• Do not start vehicle until all occupants are fully seated.
• Drive slowly in turns and straight up and down slopes.
• Remain fully seated while moving.
• Hold on and keep entire body inside vehicle while moving.
• Never attempt jumps and avoid extreme braking in reverse.
• Do not leave children unattended in vehicle at any time.
• Children requiring a child safety seat must not ride in vehicle.
• Never operate under the influence of alcohol or drugs.
104026801
7
OFF ON
3
OFF ON START
4
6
1
⚠ WARNING
Riding in cargo bed can cause severe injury or death.
Do not ride in cargo bed.
CCI 101553901
2
⚠WARNING
CRUSH AREA
STAY CLEAR
101609401
5
8
UNDER 16
⚠ WARNING
YOUNG DRIVERS OR PASSENGERS INCREASE CHANCE OF SERIOUS INJURY OR DEATH
• All occupants must be able to hold on and place both feet flat on the floorboard with their backs against the seat backs. Children requiring a child safety seat must not ride in vehicle.
• A valid driver's license is required to operate this vehicle.
102075801
VEHICLE LOADING
Read owner's manual and warnings on dash.
• Vehicle rated capacity: 900 lb (408 kg) on level surface only.
- Includes occupants and cargo load.
• Maximum cargo load: 500 lb (227 kg)
- Includes cargo, bed load, and optional equipment.
• Vehicle combination rated capacity: 900 lb (408 kg)
- Includes vehicle rated capacity and gross trailer weight.
⚠ WARNING
• ROLLOVER CAN CAUSE SERIOUS INJURY OR DEATH.
- Place cargo forward in the cargo bed and distribute evenly side to side. Secure load.
- On uneven or steep terrain, reduce speed and load.
- Avoid stopping on or backing down steep hills.
- Avoid top-heavy loads.
105137103
2874

DECALS – GASOLINE CARRYALL 550

ITEM	PART NO.	DESCRIPTION	QTY
		1 2 3 4	
1	101553901	Decal, Bed Load Warning	1
2	101609401	Decal, Crush Area Warning	1
3	101825101	Decal, Off/On	1
4	101825102	Decal, Off/On/Start	1
5	102075801	Decal, Young Driver Warning	1
6	104026801	Decal, Oc, Warning, Ca	1
7	105046101	Decal, Op, Instructions, Ca	1
8	105137103	Decal, Loading Ca 252	1

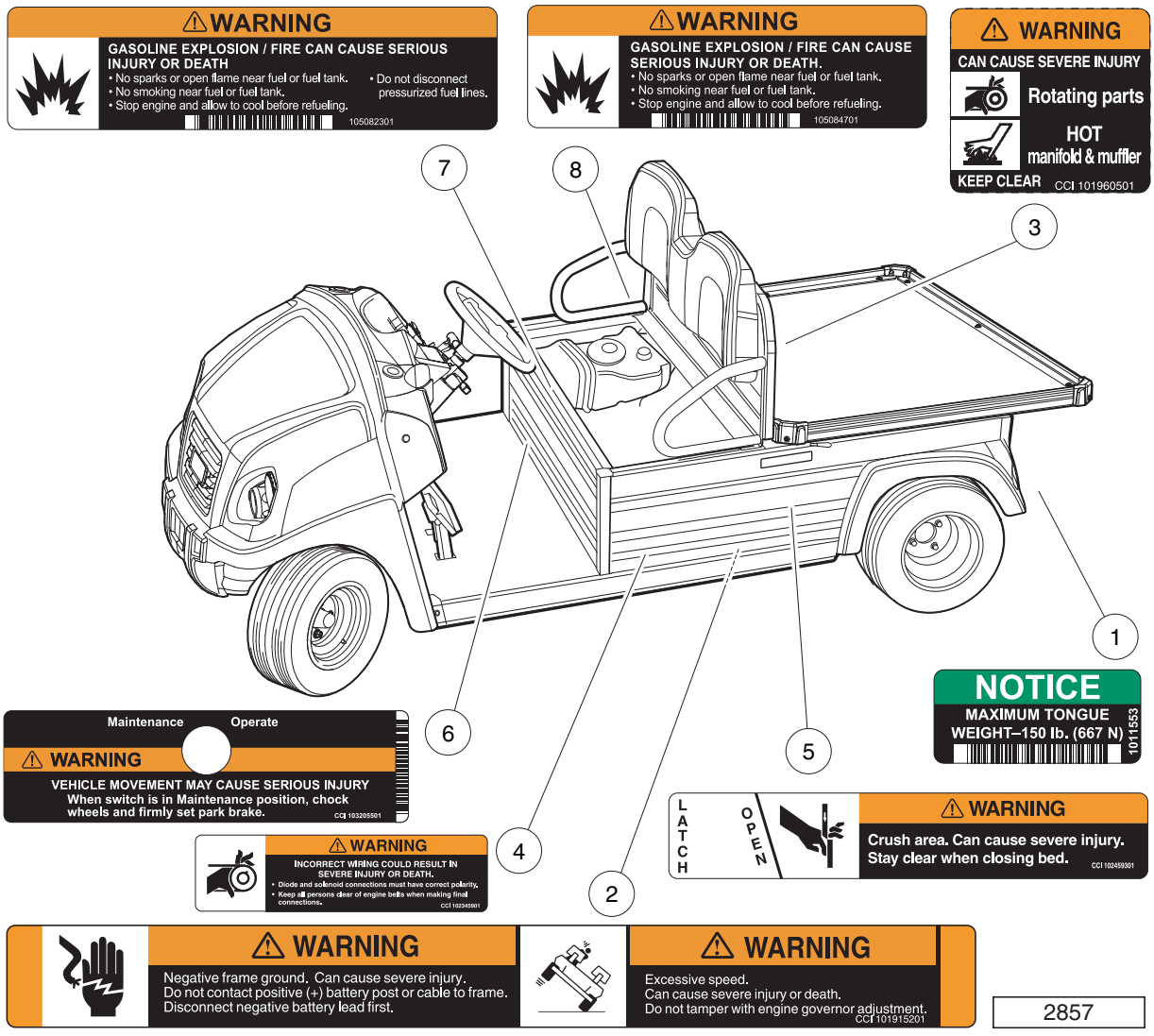
⚠WARNING
GASOLINE EXPLOSION / FIRE CAN CAUSE SERIOUS INJURY OR DEATH
• No sparks or open flame near fuel or fuel tank.
• No smoking near fuel or fuel tank.
• Stop engine and allow to cool before refueling.
• Do not disconnect pressurized fuel lines.
105082301
⚠WARNING
GASOLINE EXPLOSION / FIRE CAN CAUSE SERIOUS INJURY OR DEATH.
• No sparks or open flame near fuel or fuel tank.
• No smoking near fuel or fuel tank.
• Stop engine and allow to cool before refueling.
105084701
⚠ WARNING
CAN CAUSE SEVERE INJURY
Rotating parts
HOT
manifold & muffler
KEEP CLEAR
CCI 101960501
7
8
3
1
NOTICE
MAXIMUM TONGUE WEIGHT–150 lb. (667 N)
1011553
6
5
Maintenance
Operate
⚠ WARNING
VEHICLE MOVEMENT MAY CAUSE SERIOUS INJURY
When switch is in Maintenance position, chock wheels and firmly set park brake.
CCI 103205501
LATCH
OPEN
⚠ WARNING
Crush area. Can cause severe injury.
Stay clear when closing bed.
CCI 102459301
4
⚠ WARNING
INCORRECT WIRING COULD RESULT IN SEVERE INJURY OR DEATH.
• Diode and solenoid connections must have correct polarity.
• Keep all persons clear of engine belts when making final connections.
CCI 102345901
2
⚠ WARNING
Negative frame ground. Can cause severe injury.
Do not contact positive (+) battery post or cable to frame.
Disconnect negative battery lead first.
⚠ WARNING
Excessive speed.
Can cause severe injury or death.
Do not tamper with engine governor adjustment.
CCI 101915201
2857

DECALS – GASOLINE CARRYALL 500/550, CONTINUED

ITEM	PART NO.	DESCRIPTION	QTY
		1 2 3 4	
1	1011553	Decal, Trailer Hitch	1
2	101915201	Decal, Frame Ground and Governor Warning	1
3	101960501	Decal, Rotating Parts/Hot Manifold	1
4	102345901	Decal, Diode Safety	1
5	102459301	Decal, Bed Crush Area Warning	1
6	103205501	Decal, Run/Service Switch	1
7	105082301	Decal, Warn, Gas Pressure	1
8	105084701	Decal, Warn Gas Side Fill	1

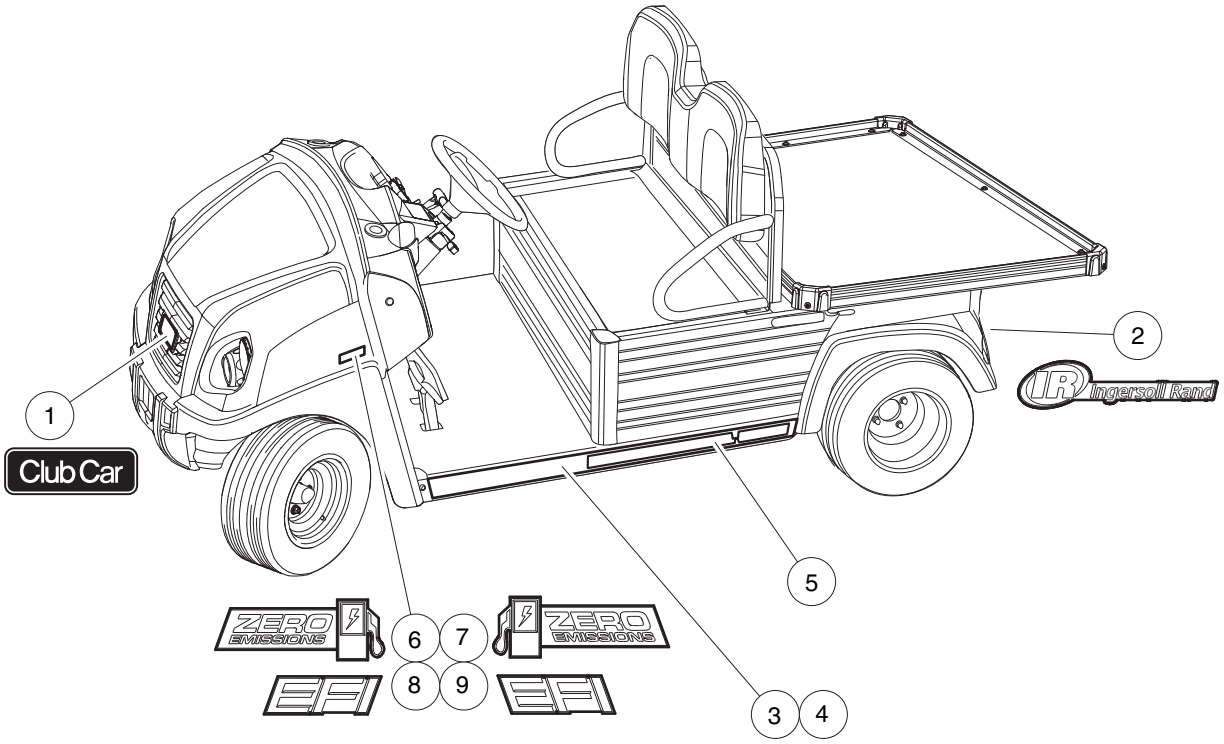
1
Club Car
2
Ingersoll Rand
5
ZERO EMISSIONS
6
7
ZERO EMISSIONS
8
9
3
4

001025-001

BADGING DECALS – CARRYALL 500

ITEM	PART NO.	DESCRIPTION	QTY
		1 2 3 4	
1	102883601	Decal, Nameplate, CCI, Front	1
2	103234304	Decal, Badge, Ir, Red	1
3	105115002	Decal, Side Stringer, Medium	1
4	105115005	Decal, R Side Stringer, Medium	1
5	105152501	Decal, Branding, Ca 500	2
6	105153201	Decal, Zero Emission Vhcle, Lh	1
7	105153202	Decal, Zero Emission Vhcle, Rh	1
8	105153301	Decal, Efi, Itallic, Lh	1
9	105153302	Decal, Efi, Itallic, Rh	1

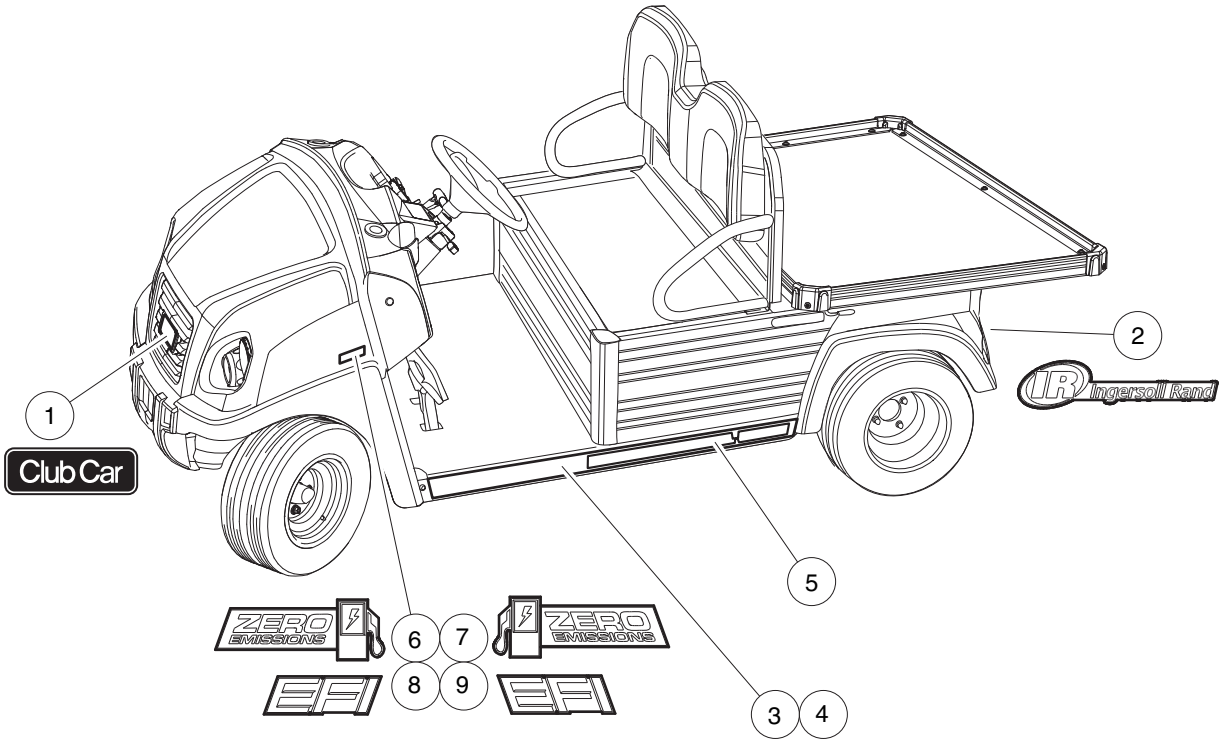
1
Club Car
2
Ingersoll Rand
5
ZERO EMISSIONS
6
7
ZERO EMISSIONS
8
9
3
4

001025-001

BADGING DECALS – CARRYALL 550

ITEM	PART NO.	DESCRIPTION	QTY
		1 2 3 4	
1	102883601	Decal, Nameplate, CCI, Front	1
2	103234304	Decal, Badge, Ir, Red	1
3	105115002	Decal, Side Stringer, Medium	1
4	105115005	Decal, R Side Stringer, Medium	1
5	105152701	Decal, Branding, Ca 550	2
6	105153201	Decal, Zero Emission Vhcle, Lh	1
7	105153202	Decal, Zero Emission Vhcle, Rh	1
8	105153301	Decal, Efi, Itallic, Lh	1
9	105153302	Decal, Efi, Itallic, Rh	1

3

G

E

LIGHTS, CONTROLS, AND INDICATORS

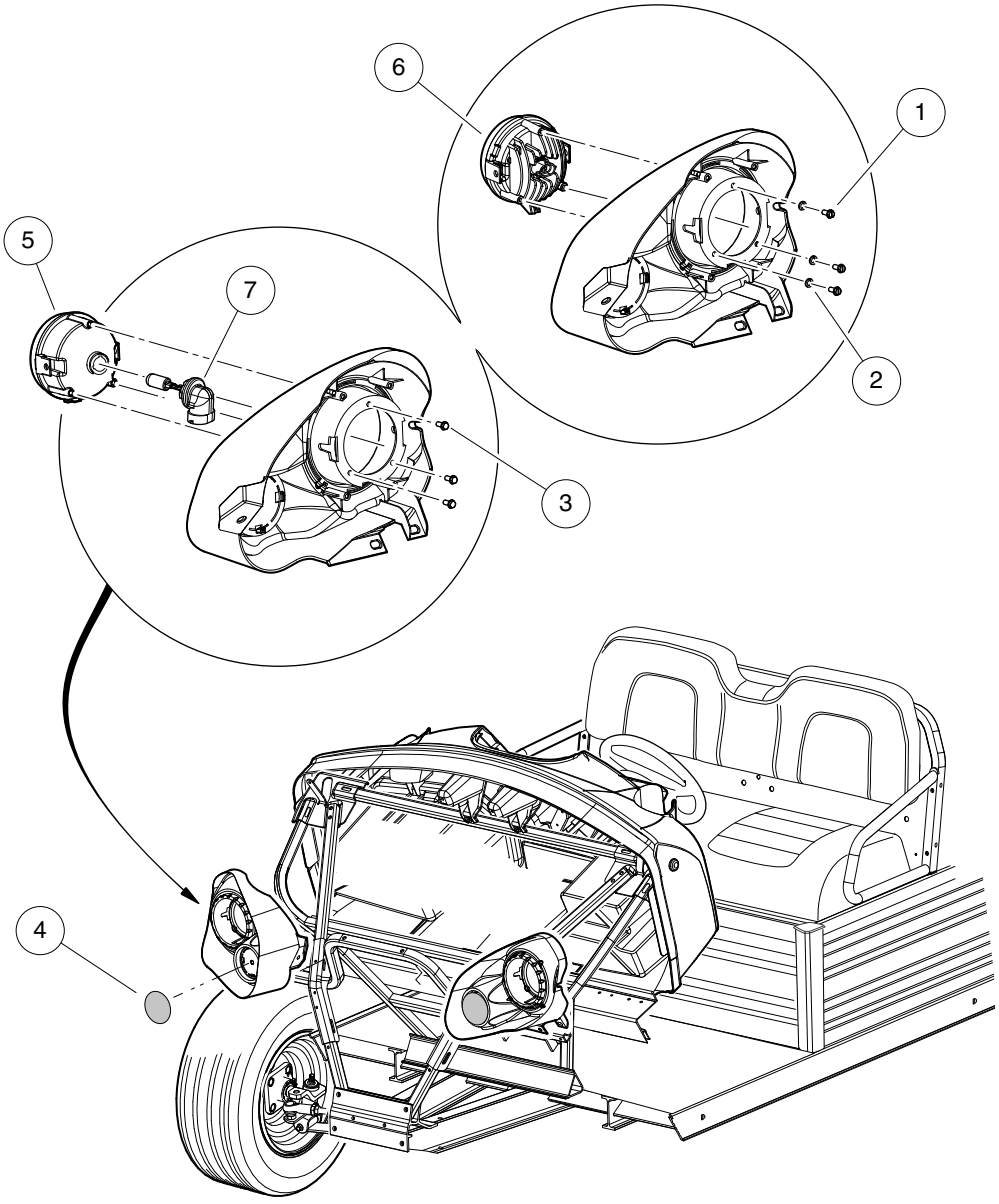

001370-001

ITEM	PART NO.	DESCRIPTION	QTY
		1 2 3 4	
1	1011017	Screw, #8-32 X 0.375	6
2	1011610	Lockwasher, #8 Split SS	6
3	101850301	Screw, #12-16 X 0.50 Washer-Head Hi-Lo	6
4	105036801	Reflector, Decal, 3.20", Amber	2
5	105073401	Hdlight, Round, 4.5", Utl	2
6	105093701	Hdlight, Round, 4.5", Led, Utl	2
7	105093801	Bulb, Halogen, 862	2

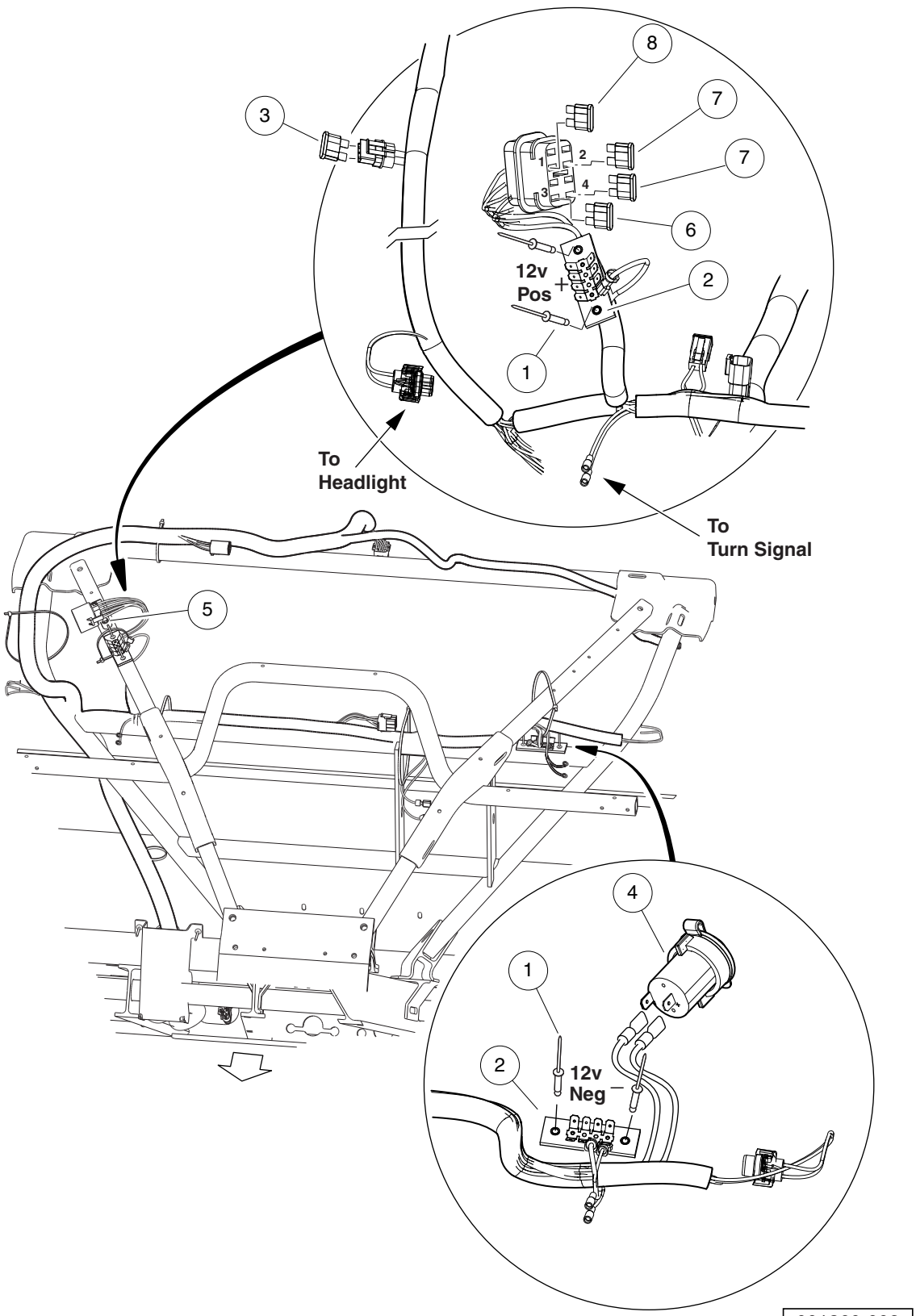
8
7
7
3
1
2
3
4
6
12v
Pos
+
2
1
To
Headlight
To
Turn Signal
5
4
1
2
12v
Neg
−
001360-002

12-VOLT FUSE BLOCK AND FUSES – ELECTRIC VEHICLE

ITEM	PART NO.	DESCRIPTION	QTY
		1 2 3 4	
1	1013357	Rivet, 5/32 Aluminum Pop	4
2	1016356	Terminal Block with Insulator	2
3	1016423	Fuse, 20-Amp	1
4	102198001	Receptacle, Accessory	1
5	102238001	#10-24 Taptite Screw	1
6	105114805	Fuse, Mini, Atm, 7.5 Amp	1
7	105114806	Fuse, Mini, Atm, 10 Amp	2
8	105114807	Fuse, Mini, Atm, 15 Amp	1

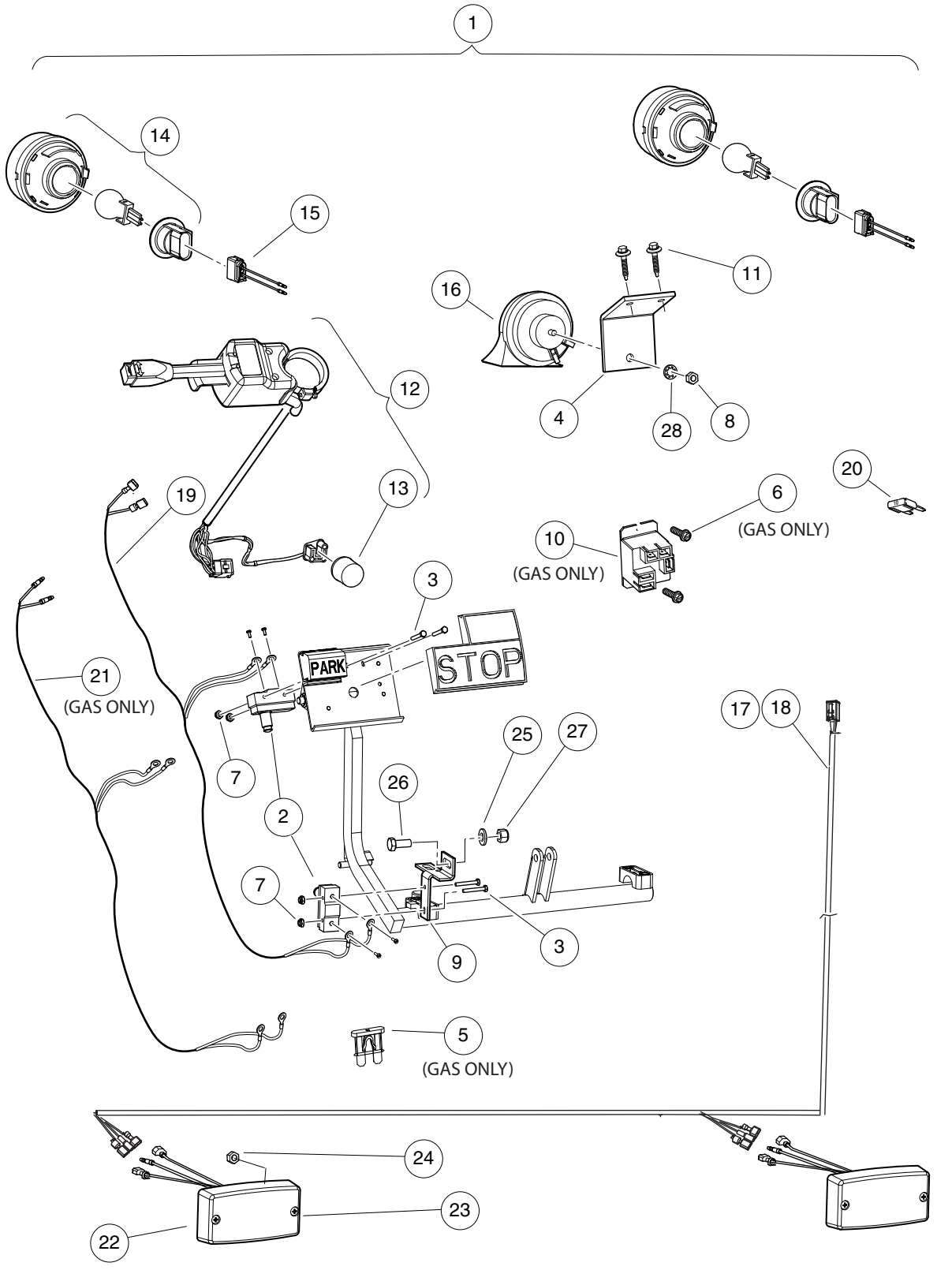
1
14
15
16
11
12
4
28
8
20
19
13
6
(GAS ONLY)
10
(GAS ONLY)
3
PARK
STOP
21
(GAS ONLY)
17
18
25
27
7
26
2
7
3
9
5
(GAS ONLY)
24
23
22
001368-002

HORN, TURN SIGNALS, AND TAILLIGHTS – ELECTRIC AND GASOLINE VEHICLES

ITEM	PART NO.	DESCRIPTION	QTY
		1 2 3 4	
1	105122808	Kit, Horn/Tail Light/Turn (includes items 2 through 28)	1
2	1011439	Switch, Limit	2
3	1011557	Screw, #6-32 X 1.00 Hex-Head Machine	4
4	1011825	Horn Bracket	1
5	1012295	Fuse, 10-Amp	1
6	1016849	Screw, #4-24 X 0.33, Pan-Head, Machine	2
7	101932201	Locknut, #6-32 Nylon	4
8	101955101	Nut, M6 Hex	1
9	101957101	Bracket, Brake Light Switch	1
10	102199001	Relay, 12-Volt	1
11	102297125	Screw, M6-1.0x25.4, Thread-Forming, SEMS	2
12	102517501	Turn Signal Asm (includes item 13)	1
13	102546401	Flasher Unit, Prec	1
14	102894503	Light, Turn Sig, Round 3", Utl	2
15	103245001	Jumper, Turn Signal, Ca/xrt/hu	2
16	103484301	Horn, 12v, Gnd Isolated	1
17	105108201	Harness, Tail Light, Utility, Short	1
18	105108301	Harness, Tail Light, Utility, Long	1
19	105108401	Harness, Brk, Pedal Switch Utl	1
20	105114806	Fuse, Mini, Atm, 10 Amp	1
21	105135201	Jumper, Hill Brake, Switch	1
22	105165801	Lamp, Stop/trn/tail, Footdeck	2
23	105190601	Screw, #8-32 X 0.625, Clr Znc	4
24	105190701	Nut, Flanged, #8-32, Serrated	4
25	1241	Washer, 5/16 Type A Flat	1
26	7173	Screw, 5/16-18 X 0.75, Hex-Head Cap	1
27	7473	Locknut, 5/16-18 Nylon Insert	2
28	7820	Washer, 5/16 Internal-Tooth	1

Note: 1051082, Harness, Tail Light, Utility, Short, fits the following vehicles with serial prefix: MA, MB, MC, MD, ME, MF, MK, ML, MM, MP, MU.

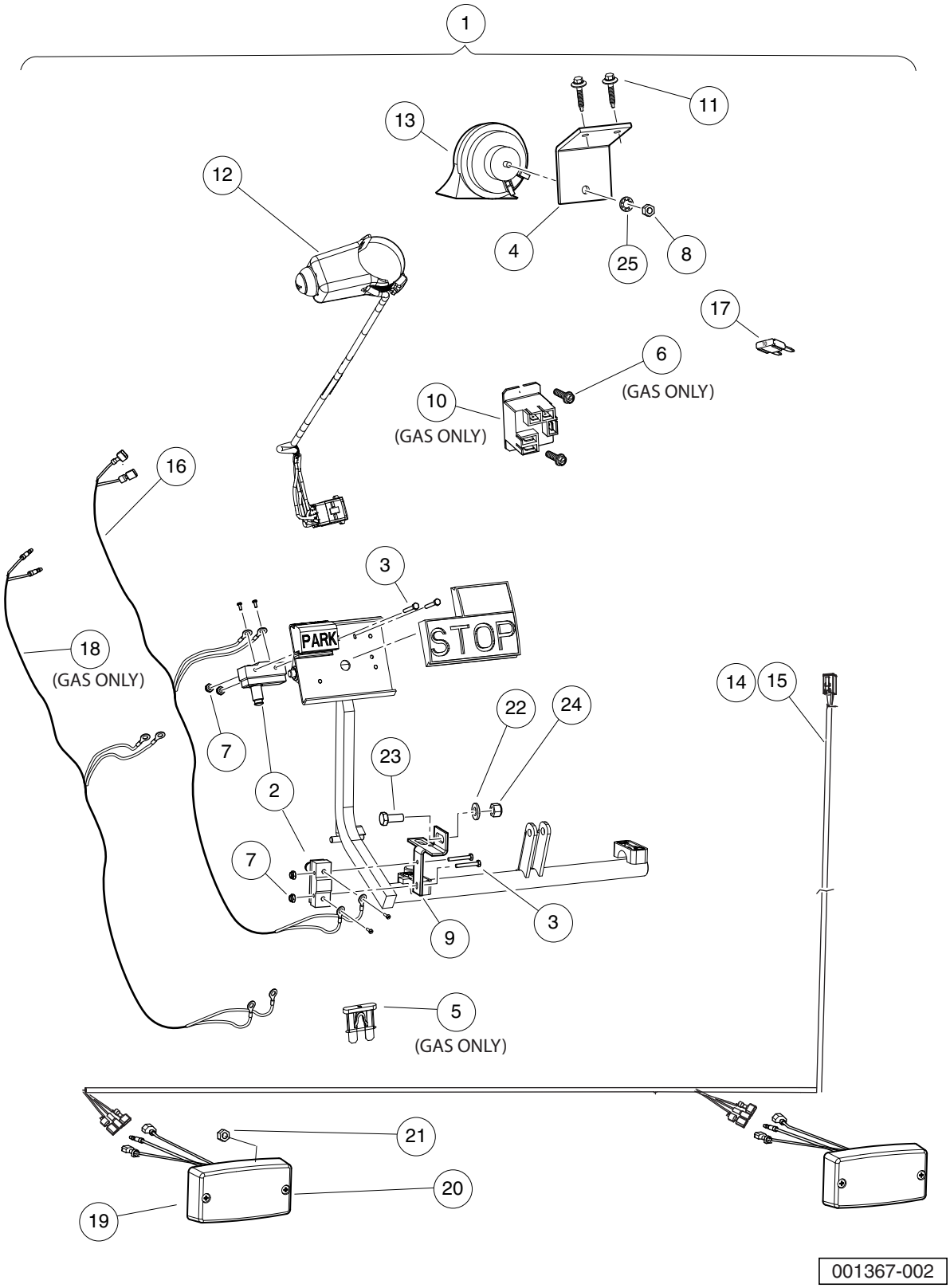
1
11
13
12
4
25
8
17
6
(GAS ONLY)
10
(GAS ONLY)
16
3
PARK
STOP
18
(GAS ONLY)
14
15
22
24
7
23
2
7
3
9
5
(GAS ONLY)
21
20
19
001367-002

HORN AND TAIL LIGHT KIT – ELECTRIC AND GASOLINE VEHICLES

ITEM	PART NO.	DESCRIPTION	QTY
		1 2 3 4	
1	105122807	Kit, Horn/Tail Light/Turn (includes items 2 through 25)	1
2	1011439	Switch, Limit	2
3	1011557	Screw, #6-32 X 1.00 Hex-Head Machine	4
4	1011825	Horn Bracket	1
5	1012295	Fuse, 10-Amp	1
6	1016849	Screw, #4-24 X 0.33, Pan-Head, Machine	2
7	101932201	Locknut, #6-32 Nylon	4
8	101955101	Nut, M6 Hex	1
9	101957101	Bracket, Brake Light Switch	1
10	102199001	Relay, 12-Volt	1
11	102297125	Screw, M6-1.0x25.4, Thread-Forming, SEMS	2
12	102517601	Subasm, Horn Button Harness	1
13	103484301	Horn, 12v, Gnd Isolated	1
14	105108201	Harness, Tail Light, Utility, Short	1
15	105108301	Harness, Tail Light, Utility, Long	1
16	105108401	Harness, Brk, Pedal Switch Utl	1
17	105114806	Fuse, Mini, Atm, 10 Amp	1
18	105135201	Jumper, Hill Brake, Switch	1
19	105165801	Lamp, Stop/trn/tail, Footdeck	2
20	105190601	Screw, #8-32 X 0.625, Clr Znc	4
21	105190701	Nut, Flanged, #8-32, Serrated	4
22	1241	Washer, 5/16 Type A Flat	1
23	7173	Screw, 5/16-18 X 0.75, Hex-Head Cap	1
24	7473	Locknut, 5/16-18 Nylon Insert	1
25	7820	Washer, 5/16 Internal-Tooth	1

Note: 105108201 Harness, Tail Light, Utility, Short, fits the following vehicles with serial prefix: MA, MB, MC, MD, ME, MF, MK, ML, MM, MP, MU.

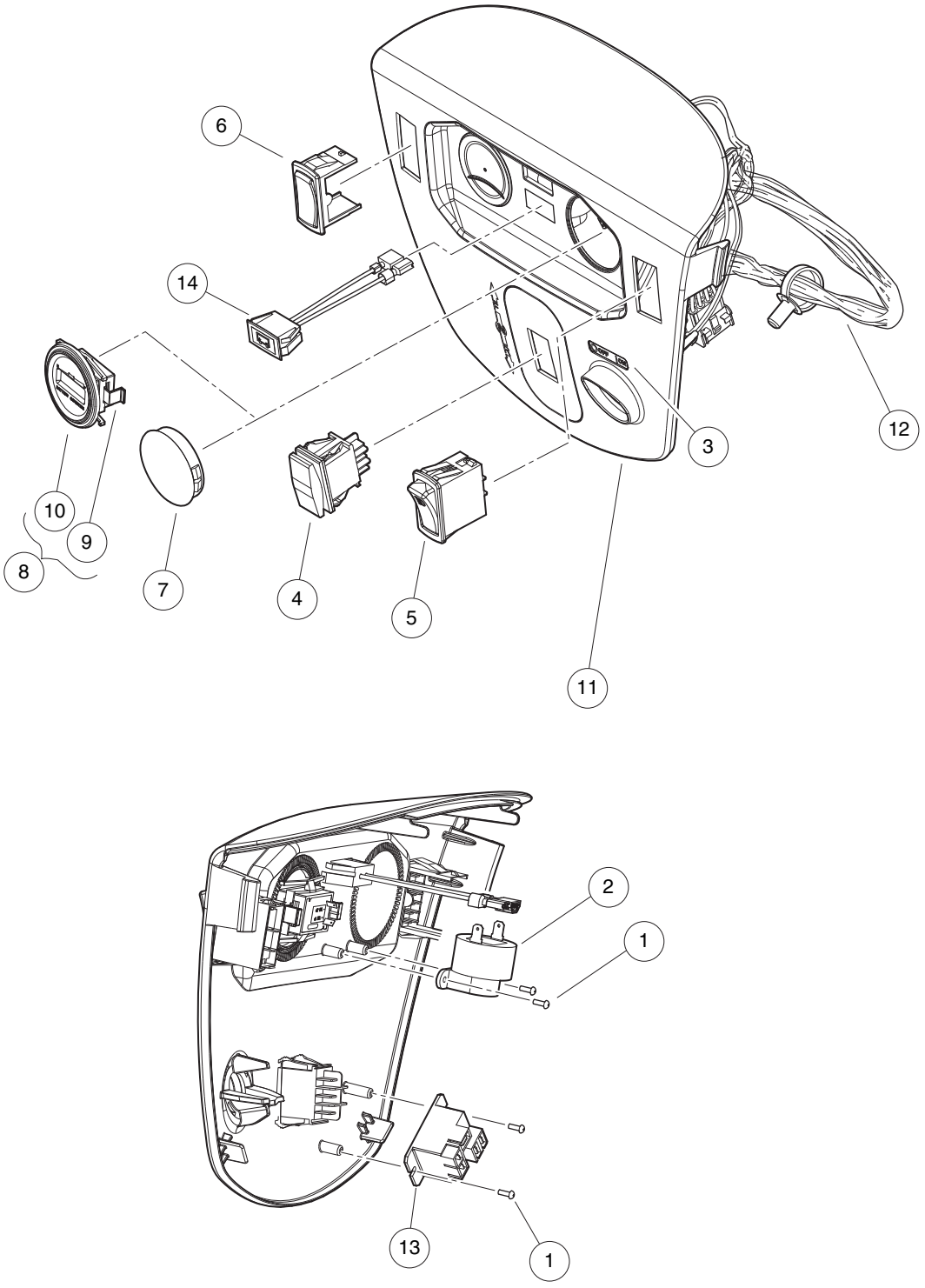

001371-001

INSTRUMENT PANEL – ELECTRIC VEHICLE

ITEM	PART NO.	DESCRIPTION	QTY
		1 2 3 4	
1	1016849	Screw, #4-24 X 0.33, Pan-Head, Machine	2
2	1016851	Buzzer, Reverse (9-48 VDC)	1
3	101825101	Decal, Off/On	1
4	101856002	Switch, Rocker, Single-Pole	1
5	102869401	Switch, Rocker, Light	1
6	103180101	Cover, Hole, Switch, Rocker	1
7	103198301	Plug, Hole, Round, 2.0 In	1
8	103354401	Gauge, Battery Cond Ind, Rnd (includes item 9)	1
9	103348202	Clip, Bci, Round	1
10	105034101	Panel, Instrument, Elec, Ca	1
11	105082101	Harness, Ip, Elec, Util	1
12	105112401	Relay, Spdt Nc, 48v 30a, Pmt	1
13	105152301	Indicator, Charger, Dash, Cap	1

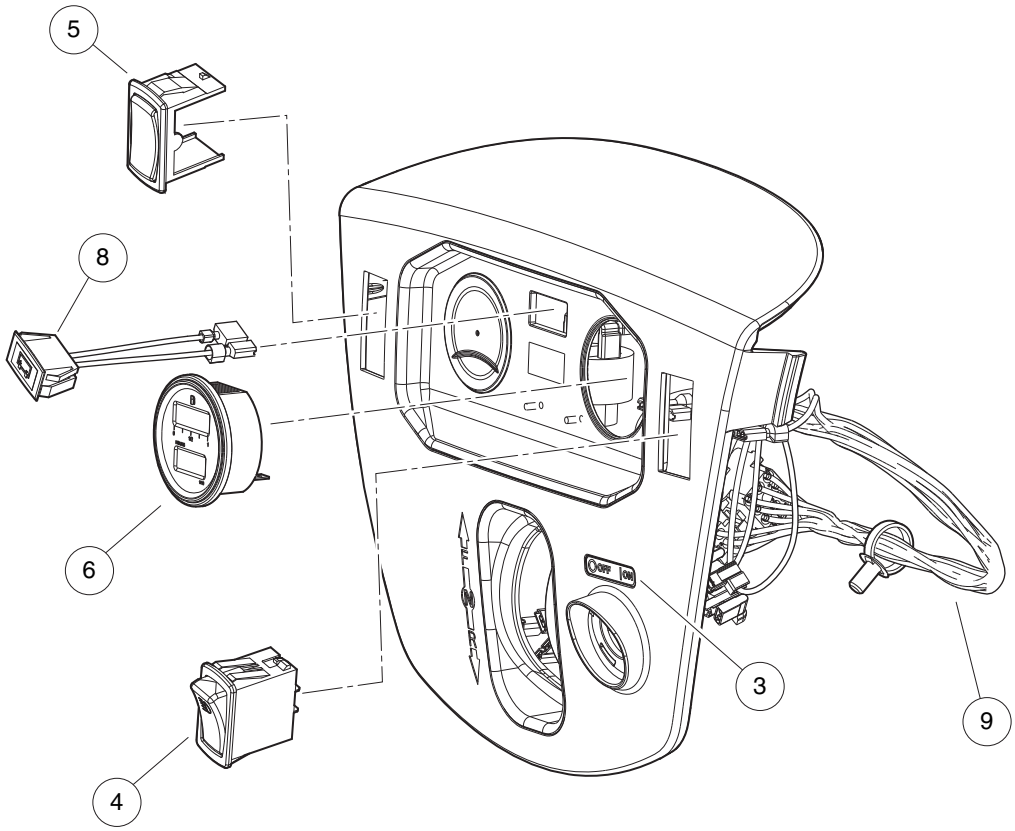

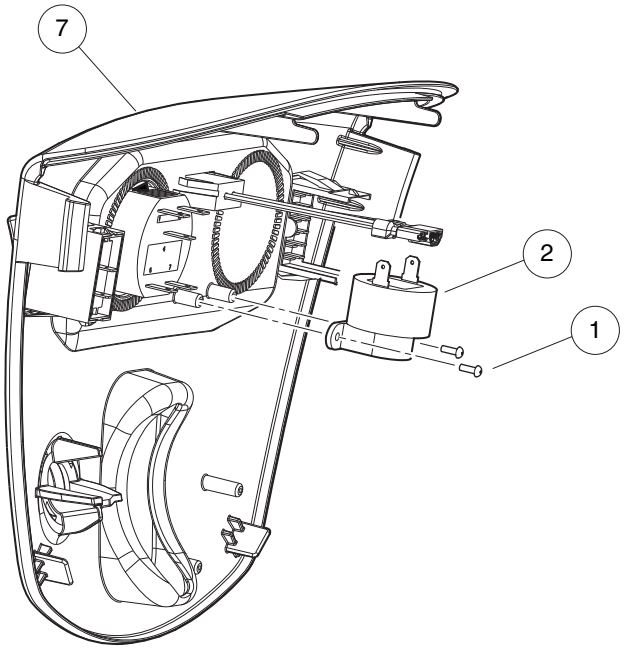

001372-001

INSTRUMENT PANEL – GASOLINE VEHICLE

ITEM	PART NO.	DESCRIPTION	QTY
		1 2 3 4	
1	1016849	Screw, #4-24 X 0.33, Pan-Head, Machine	2
2	1016851	Buzzer, Reverse (9-48 VDC)	1
3	101825101	Decal, Off/On	1
4	102869401	Switch, Rocker, Light	1
5	103180101	Cover, Hole, Switch, Rocker	1
6	103348602	Gauge, Fuel-hour,sep Gnd, Ds	1
7	105034102	Panel, Instrument, Gas, Ca	1
8	105037101	Light, Oil (LED)	1
9	105095101	Harness, Wire, Instr. Panel, Gas, CA300-700	1

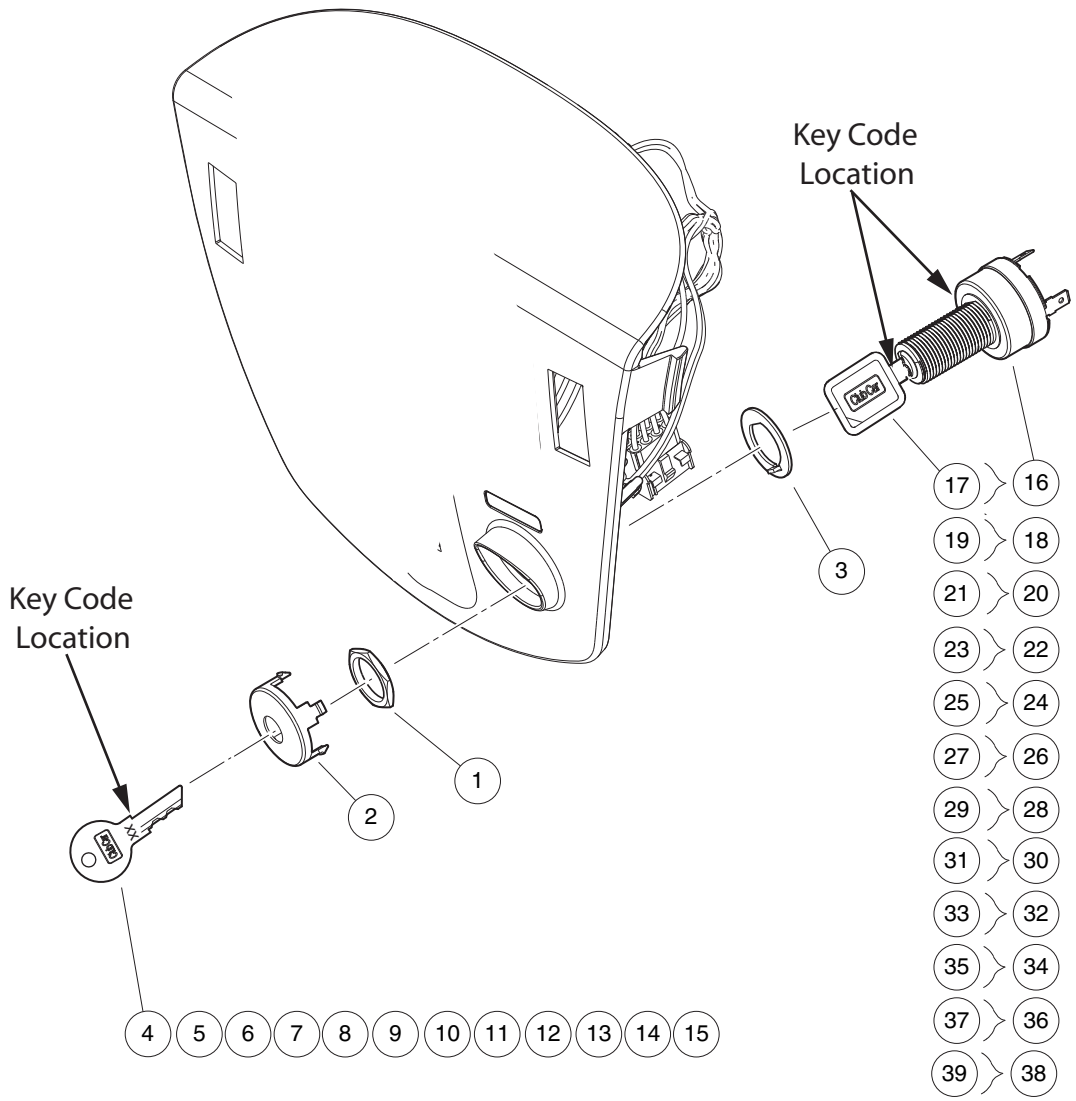
Key Code
Location
Key Code
Location
1
2
3
4
5
6
7
8
9
10
11
12
13
14
15
16
17
18
19
20
21
22
23
24
25
26
27
28
29
30
31
32
33
34
35
36
37
38
39

001355-001

KEYSWITCH – ELECTRIC VEHICLE

ITEM	PART NO.	DESCRIPTION	QTY
		1 2 3 4	
1	101830701	Nut, Key Switch	1
2	101834502	Cap, Black Key Switch	1
3	101851101	Washer, Key Switch	1
4	101974701	Key, Uncommon 1a	1
5	101974702	Key, Uncommon 1b	1
6	101974703	Key, Uncommon 1c	1
7	101974704	Key, Uncommon 1d	1
8	101974705	Key, Uncommon 2a	1
9	101974706	Key, Uncommon 2b	1
10	101974707	Key, Uncommon 2c	1
11	101974708	Key, Uncommon 2d	1
12	101974709	Key, Uncommon 1e	1
13	101974710	Key, Uncommon 1f	1
14	101974711	Key, Uncommon 2e	1
15	101974712	Key, Uncommon 2f	1
16	105081701	Keysw, Uncom, 4t, Off/on 1a, E (includes item 17)	1
17	105068001	Key, Uncommon, Padded 1a	1
18	105081702	Keysw, Uncom, 4t, Off/on 1b, E (includes item 19)	1
19	105068002	Key, Uncommon, Padded 1b	1
20	105081703	Keysw, Uncom, 4t, Off/on 1c, E (includes item 21)	1
21	105068003	Key, Uncommon, Padded 1c	1
22	105081704	Keysw, Uncom, 4t, Off/on 1d, E (includes item 23)	1
23	105068004	Key, Uncommon, Padded 1d	1
24	105081705	Keysw, Uncom, 4t, Off/on 1e, E (includes item 25)	1
25	105068005	Key, Uncommon, Padded 1e	1
26	105081706	Keysw, Uncom, 4t, Off/on 1f, E (includes item 27)	1
27	105068006	Key, Uncommon, Padded 1f	1
28	105081707	Keysw, Uncom, 4t, Off/on 2a, E (includes item 29)	1
29	105068007	Key, Uncommon, Padded 2a	1
30	105081708	Keysw, Uncom, 4t, Off/on 2b, E (includes item 31)	1
31	105068008	Key, Uncommon, Padded 2b	1
32	105081709	Keysw, Uncom, 4t, Off/on 2c, E (includes item 33)	1
33	105068009	Key, Uncommon, Padded 2c	1
34	105081710	Keysw, Uncom, 4t, Off/on 2d, E (includes item 35)	1
35	105068010	Key, Uncommon, Padded 2d	1
36	105081711	Keysw, Uncom, 4t, Off/on 2e, E (includes item 37)	1
37	105068011	Key, Uncommon, Padded 2e	1
38	105081712	Keysw, Uncom, 4t, Off/on 2f, E (includes item 39)	1
39	105068012	Key, Uncommon, Padded 2f	1

Note: Keyswitch 105081701, is standard for electric vehicles equipped with a cab. Keyswitch 105081702, is standard for electric vehicles without a cab. Keyswitches 105081703 through 105081712 allows different key code combinations for electric fleet vehicles.

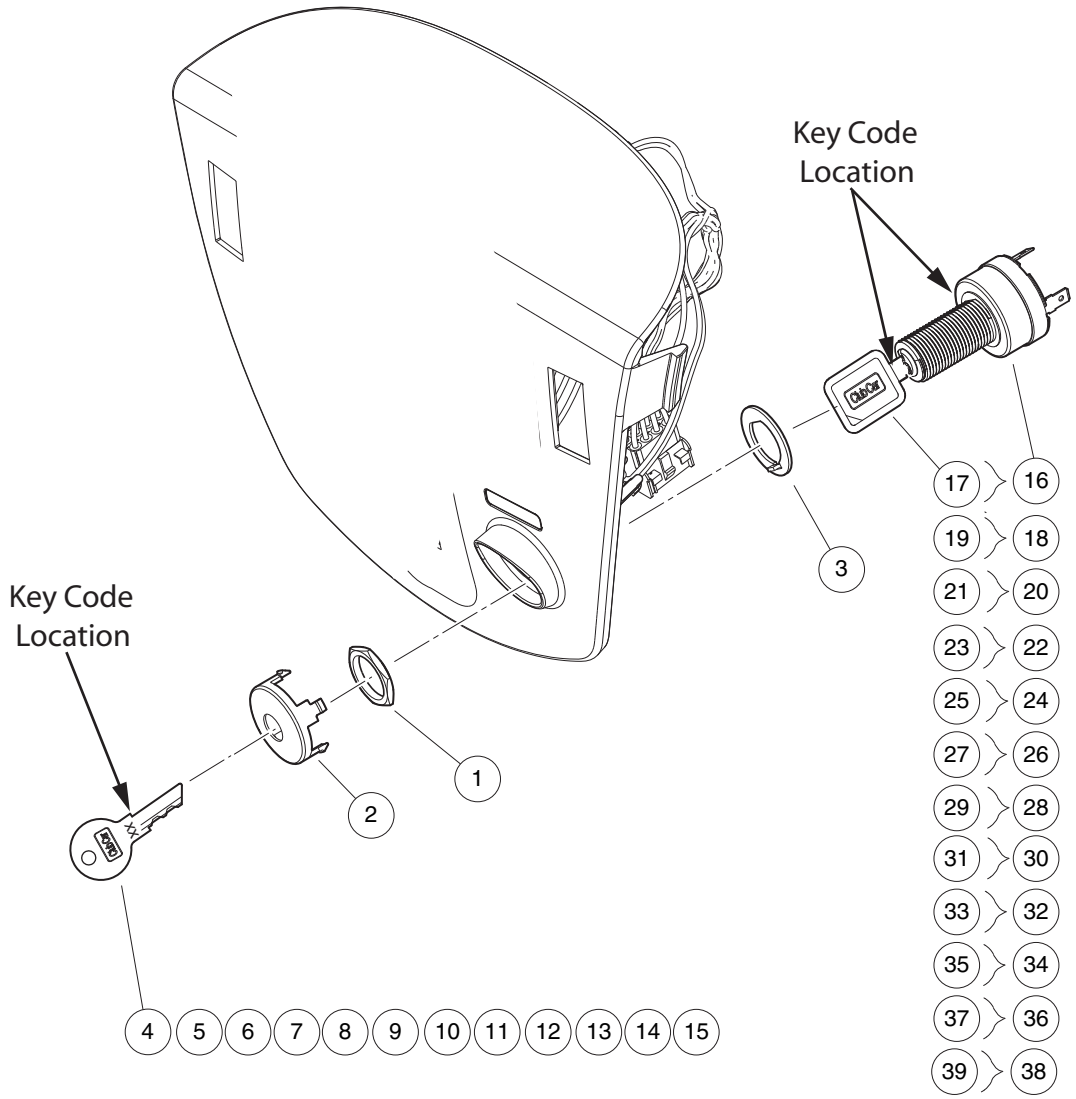
Key Code
Location
Key Code
Location
1
2
3
4
5
6
7
8
9
10
11
12
13
14
15
16
17
18
19
20
21
22
23
24
25
26
27
28
29
30
31
32
33
34
35
36
37
38
39

001355-001

KEYSWITCH, PRIVATE SPEED MODE - ELECTRIC VEHICLE

ITEM	PART NO.	DESCRIPTION	QTY
		1 2 3 4	
1	101830701	Nut, Key Switch	1
2	101834502	Cap, Black Key Switch	1
3	101851101	Washer, Key Switch	1
4	101974701	Key, Uncommon 1a	1
5	101974702	Key, Uncommon 1b	1
6	101974703	Key, Uncommon 1c	1
7	101974704	Key, Uncommon 1d	1
8	101974705	Key, Uncommon 2a	1
9	101974706	Key, Uncommon 2b	1
10	101974707	Key, Uncommon 2c	1
11	101974708	Key, Uncommon 2d	1
12	101974709	Key, Uncommon 1e	1
13	101974710	Key, Uncommon 1f	1
14	101974711	Key, Uncommon 2e	1
15	101974712	Key, Uncommon 2f	1
16	105082001	Keysw, Uncom, 4t, Off/p2/p3 1a (includes item 17)	1
17	105068001	Key, Uncommon, Padded 1a	1
18	105082002	Keysw, Uncom, 4t, Off/p2/p3 1b (includes item 19)	1
19	105068002	Key, Uncommon, Padded 1b	1
20	105082003	Keysw, Uncom, 4t, Off/p2/p3 1c (includes item 21)	1
21	105068003	Key, Uncommon, Padded 1c	1
22	105082004	Keysw, Uncom, 4t, Off/p2/p3 1d (includes item 23)	1
23	105068004	Key, Uncommon, Padded 1d	1
24	105082005	Keysw, Uncom, 4t, Off/p2/p3 1e (includes item 25)	1
25	105068005	Key, Uncommon, Padded 1e	1
26	105082006	Keysw, Uncom, 4t, Off/p2/p3 1f (includes item 27)	1
27	105068006	Key, Uncommon, Padded 1f	1
28	105082007	Keysw, Uncom, 4t, Off/p2/p3 2a (includes item 29)	1
29	105068007	Key, Uncommon, Padded 2a	1
30	105082008	Keysw, Uncom, 4t, Off/p2/p3 2b (includes item 31)	1
31	105068008	Key, Uncommon, Padded 2b	1
32	105082009	Keysw, Uncom, 4t, Off/p2/p3 2c (includes item 33)	1
33	105068009	Key, Uncommon, Padded 2c	1
34	105082010	Keysw, Uncom, 4t, Off/p2/p3 2d (includes item 35)	1
35	105068010	Key, Uncommon, Padded 2d	1
36	105082011	Keysw, Uncom, 4t, Off/p2/p3 2e (includes item 37)	1
37	105068011	Key, Uncommon, Padded 2e	1
38	105082012	Keysw, Uncom, 4t, Off/p2/p3 2f (includes item 39)	1
39	105068012	Key, Uncommon, Padded 2f	1

Note: Keyswitch 105082001, is standard for private speed mode electric vehicles equipped with a cab. Keyswitch 105082002, is standard for private speed mode electric vehicles without a cab. Keyswitches 105082003 through 105082012 allows different key code combinations for private speed mode electric fleet vehicles.

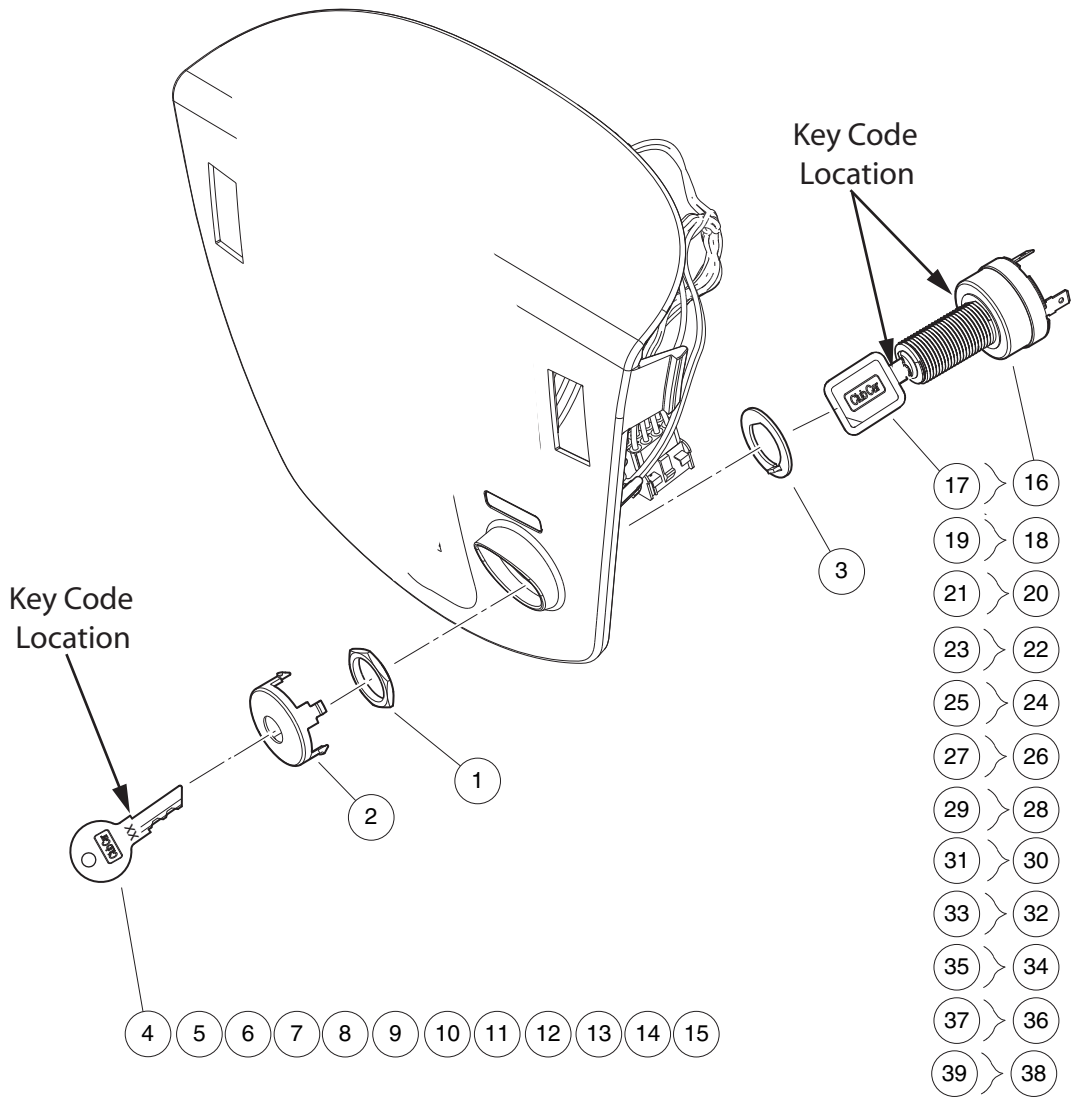
Key Code
Location
Key Code
Location
1
2
3
4
5
6
7
8
9
10
11
12
13
14
15
16
17
18
19
20
21
22
23
24
25
26
27
28
29
30
31
32
33
34
35
36
37
38
39

001355-001

KEYSWITCH, PEDAL-START – GASOLINE VEHICLE

ITEM	PART NO.	DESCRIPTION	QTY
		1 2 3 4	
1	101830701	Nut, Key Switch	1
2	101834502	Cap, Black Key Switch	1
3	101851101	Washer, Key Switch	1
4	101974701	Key, Uncommon 1a	1
5	101974702	Key, Uncommon 1b	1
6	101974703	Key, Uncommon 1c	1
7	101974704	Key, Uncommon 1d	1
8	101974705	Key, Uncommon 2a	1
9	101974706	Key, Uncommon 2b	1
10	101974707	Key, Uncommon 2c	1
11	101974708	Key, Uncommon 2d	1
12	101974709	Key, Uncommon 1e	1
13	101974710	Key, Uncommon 1f	1
14	101974711	Key, Uncommon 2e	1
15	101974712	Key, Uncommon 2f	1
16	105081801	Keysw, Uncom, 4t, Off/on 1a, G (includes item 17)	1
17	105068001	Key, Uncommon, Padded 1a	1
18	105081802	Keysw, Uncom, 4t, Off/on 1b, G (includes item 19)	1
19	105068002	Key, Uncommon, Padded 1b	1
20	105081803	Keysw, Uncom, 4t, Off/on 1c, G (includes item 21)	A/R
21	105068003	Key, Uncommon, Padded 1c	1
22	105081804	Keysw, Uncom, 4t, Off/on 1d, G (includes item 23)	1
23	105068004	Key, Uncommon, Padded 1d	1
24	105081805	Keysw, Uncom, 4t, Off/on 1e, G (includes item 25)	1
25	105068005	Key, Uncommon, Padded 1e	1
26	105081806	Keysw, Uncom, 4t, Off/on 1f, G (includes item 27)	1
27	105068006	Key, Uncommon, Padded 1f	1
28	105081807	Keysw, Uncom, 4t, Off/on 2a, G (includes item 29)	1
29	105068007	Key, Uncommon, Padded 2a	1
30	105081808	Keysw, Uncom, 4t, Off/on 2b, G (includes item 31)	1
31	105068008	Key, Uncommon, Padded 2b	1
32	105081809	Keysw, Uncom, 4t, Off/on 2c, G (includes item 33)	1
33	105068009	Key, Uncommon, Padded 2c	1
34	105081810	Keysw, Uncom, 4t, Off/on 2d, G (includes item 35)	1
35	105068010	Key, Uncommon, Padded 2d	1
36	105081811	Keysw, Uncom, 4t, Off/on 2e, G (includes item 37)	1
37	105068011	Key, Uncommon, Padded 2e	1
38	105081812	Keysw, Uncom, 4t, Off/on 2f, G (includes item 39)	1
39	105068012	Key, Uncommon, Padded 2f	1

Note: Keyswitch 105081801, is standard for pedal-start gasoline vehicles equipped with a cab. Keyswitch 105081802, is standard for pedal-start gasoline vehicles without a cab. Keyswitches 105081803 through 105081812 allows different key code combinations for pedal-start gasoline fleet vehicles.

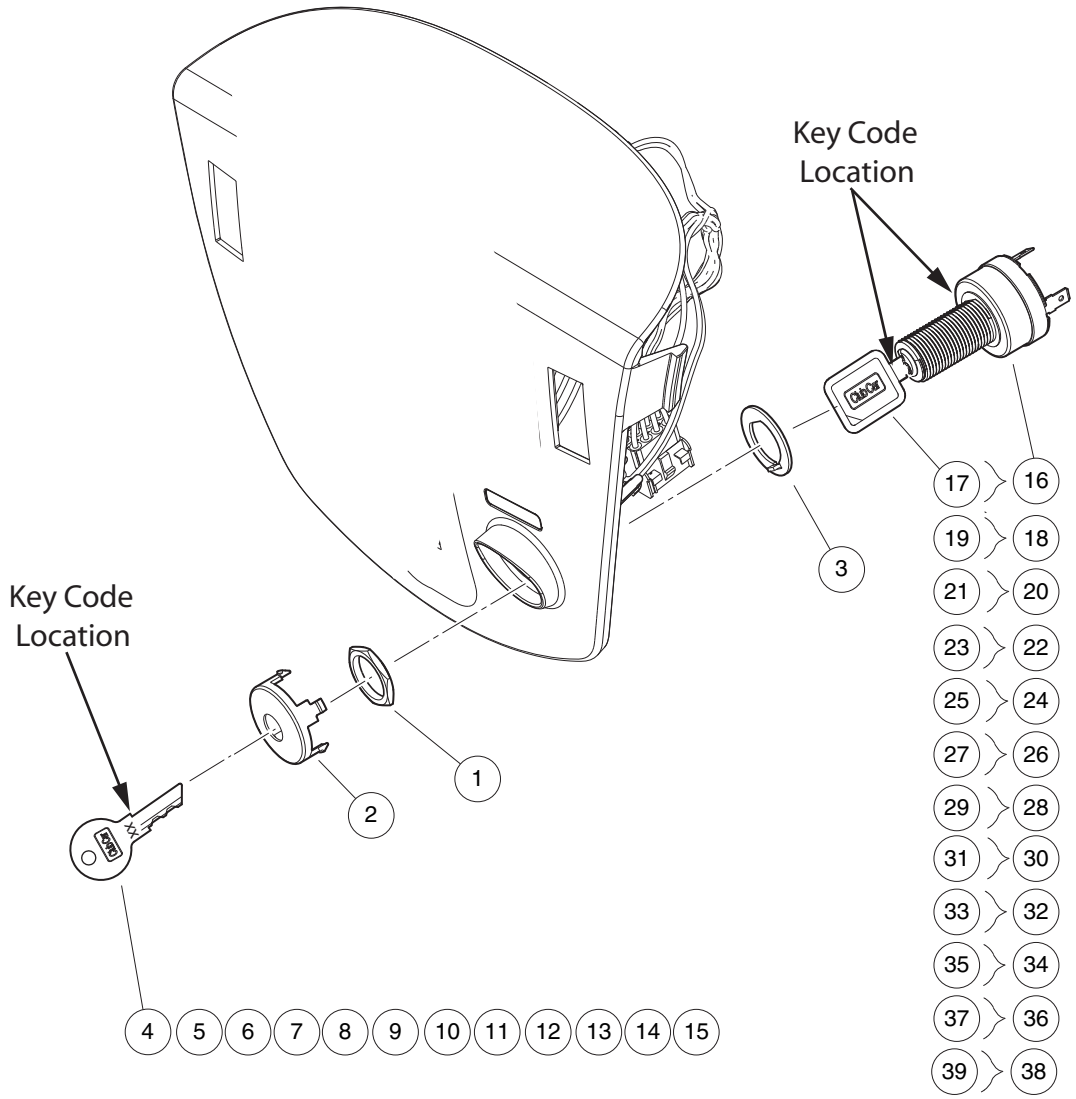
Key Code
Location
Key Code
Location
1
2
3
4
5
6
7
8
9
10
11
12
13
14
15
16
17
18
19
20
21
22
23
24
25
26
27
28
29
30
31
32
33
34
35
36
37
38
39

001355-001

KEYSWITCH, KEY-START – GASOLINE VEHICLE

ITEM	PART NO.	DESCRIPTION	QTY
		1 2 3 4	
1	101830701	Nut, Key Switch	1
2	101834502	Cap, Black Key Switch	1
3	101851101	Washer, Key Switch	1
4	101974701	Key, Uncommon 1a	1
5	101974702	Key, Uncommon 1b	1
6	101974703	Key, Uncommon 1c	1
7	101974704	Key, Uncommon 1d	1
8	101974705	Key, Uncommon 2a	1
9	101974706	Key, Uncommon 2b	1
10	101974707	Key, Uncommon 2c	1
11	101974708	Key, Uncommon 2d	1
12	101974709	Key, Uncommon 1e	1
13	101974710	Key, Uncommon 1f	1
14	101974711	Key, Uncommon 2e	1
15	101974712	Key, Uncommon 2f	1
16	105081901	Keysw, Uncom, 4t, Off/on/st 1a (includes item 17)	1
17	105068001	Key, Uncommon, Padded 1a	1
18	105081902	Keysw, Uncom, 4t, Off/on/st 1b (includes item 19)	1
19	105068002	Key, Uncommon, Padded 1b	1
20	105081903	Keysw, Uncom, 4t, Off/on/st 1c (includes item 21)	1
21	105068003	Key, Uncommon, Padded 1c	1
22	105081904	Keysw, Uncom, 4t, Off/on/st 1d (includes item 23)	1
23	105068004	Key, Uncommon, Padded 1d	1
24	105081905	Keysw, Uncom, 4t, Off/on/st 1e (includes item 25)	1
25	105068005	Key, Uncommon, Padded 1e	1
26	105081906	Keysw, Uncom, 4t, Off/on/st 1f (includes item 27)	1
27	105068006	Key, Uncommon, Padded 1f	1
28	105081907	Keysw, Uncom, 4t, Off/on/st 2a (includes item 29)	1
29	105068007	Key, Uncommon, Padded 2a	1
30	105081908	Keysw, Uncom, 4t, Off/on/st 2b (includes item 31)	1
31	105068008	Key, Uncommon, Padded 2b	1
32	105081909	Keysw, Uncom, 4t, Off/on/st 2c (includes item 33)	1
33	105068009	Key, Uncommon, Padded 2c	1
34	105081910	Keysw, Uncom, 4t, Off/on/st 2d (includes item 35)	1
35	105068010	Key, Uncommon, Padded 2d	1
36	105081911	Keysw, Uncom, 4t, Off/on/st 2e (includes item 37)	1
37	105068011	Key, Uncommon, Padded 2e	1
38	105081912	Keysw, Uncom, 4t, Off/on/st 2f (includes item 39)	1
39	105068012	Key, Uncommon, Padded 2f	1

Note: Keyswitch 105081901, is standard for key-start gasolinevehicles equipped with a cab. Keyswitch 105081902, is standard for key-start gasoline vehicles without a cab. Keyswitches 105081903 through 105081912 allows different key code combinations for key-start gasoline fleet vehicles.

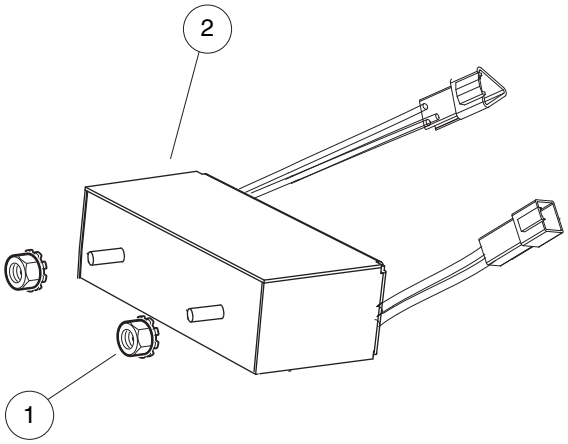

001358-001

DC CONVERTER – ELECTRIC VEHICLE

ITEM	PART NO.	DESCRIPTION	QTY
		1 2 3 4	
1	101835601	Locknut, 1/4-20 Hex Whiz	2
2	103700301	Converter, Dc/dc, Isoltd	1

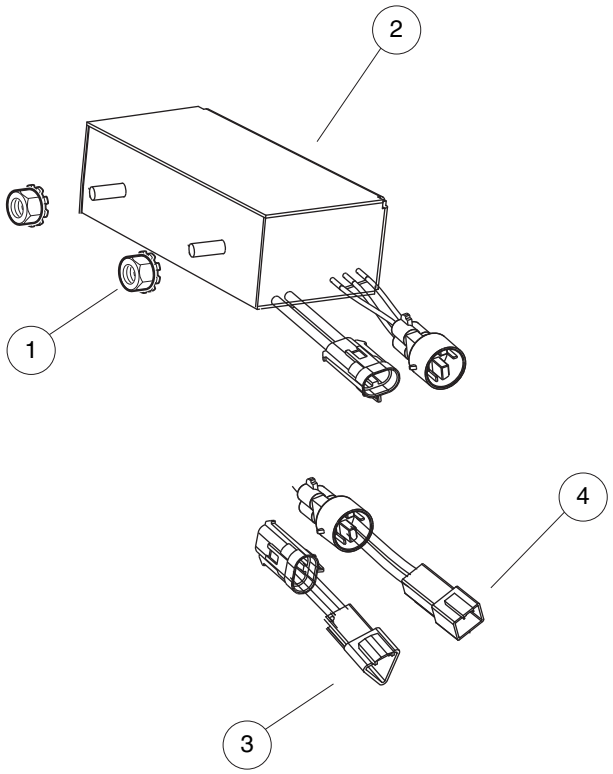

001359-001

DC CONVERTER, HEAVY DUTY – ELECTRIC VEHICLE

ITEM	PART NO.	DESCRIPTION	QTY
		1 2 3 4	
1	101835601	Locknut, 1/4-20 Hex Whiz	2
2	103449501	Bead, Ferrite, Tdk	1
3	103804901	Converter, 25a, Isolated, Ce	1
4	105146901	Jmpr, Dc Conv, Dt/mp480s, In	1
5	105147001	Jmpr, Dc Conv, Dt/mp480s, Out	1

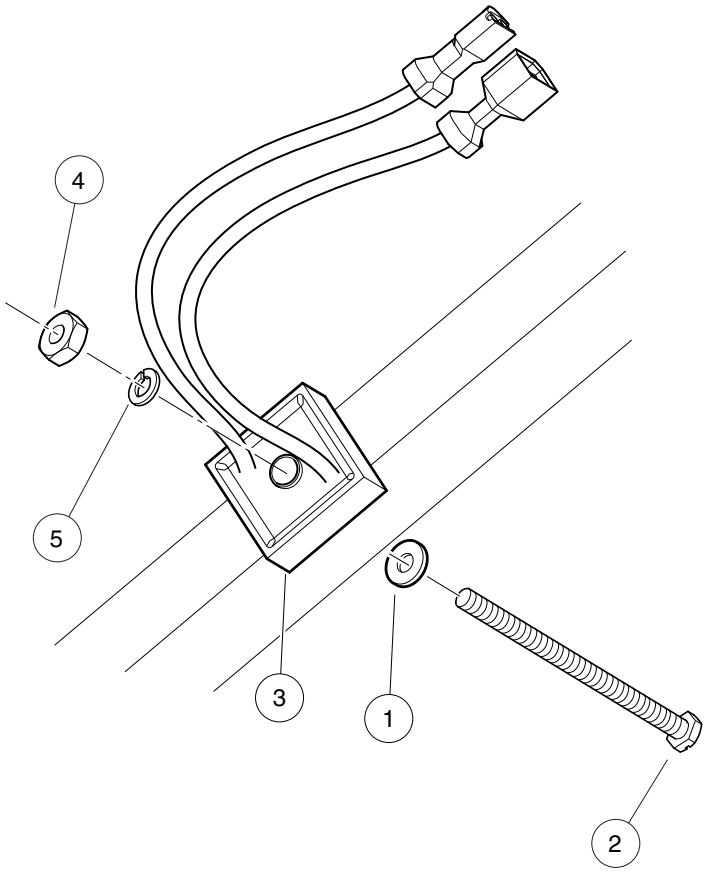

001365-001

VOLTAGE LIMITER – GASOLINE VEHICLE

ITEM	PART NO.	DESCRIPTION	QTY
		1 2 3 4	
1	1012431	Washer, #4 Flat	1
2	1015878	Screw, #4-40 Hex Head Machine	1
3	102529101	Voltage Limiter, Prec	1
4	8057	Nut, #4-40 Hex Machine	1
5	8058	Lockwasher, #4 Split	1

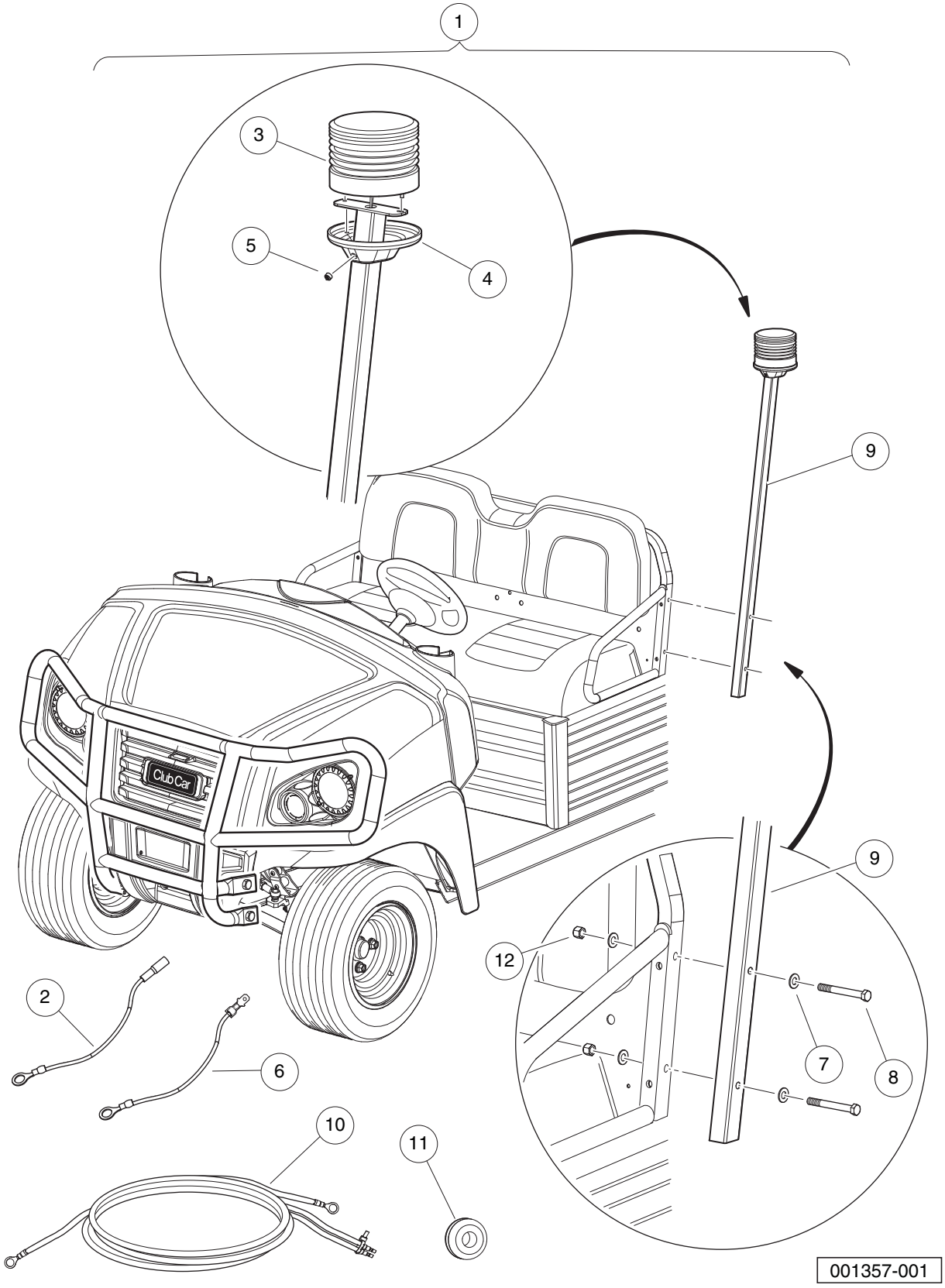
1
3
5
4
9
9
12
2
6
7
8
10
11
001357-001

STROBE LIGHT, POST MOUNTED – GASOLINE VEHICLES

ITEM	PART NO.	DESCRIPTION	QTY
		1 2 3 4	
1	105155601	Kit, Post Mtd. Strobe, Gas (includes items 2 through 12)	1
2	1015154	Wire Assembly Blue Ca #16	1
3	1015156	Light Assembly, Strobe	1
4	1015157	Cover Plate Switch - Pole Ca	1
5	1015187	Switch Assembly	1
6	1016929	Wire Assembly Black #16	1
7	102323501	Washer, Flat, 3/8, Blk Fin	4
8	105088601	Hhcs, 3/8 - 16 X 3.25, Black	2
9	105118601	Weldment, Post Mtd. Strobe	1
10	105204401	Wire Harness Asm,PM Strobe	1
11	105205301	Grommet,1/8-in groove	1
12	8754	Locknut, 3/8-16 Hex	2

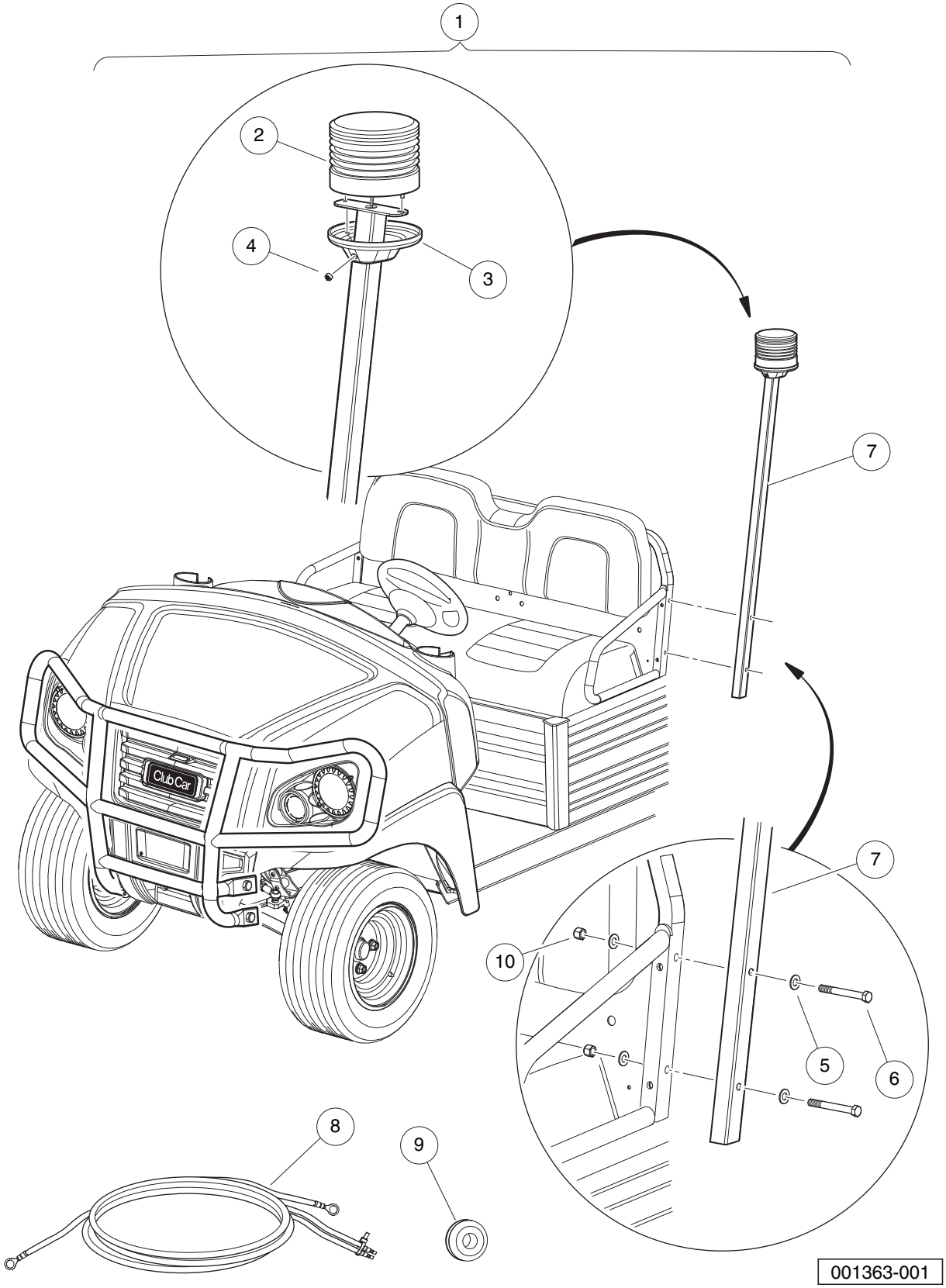
1
2
3
4
7
7
10
5
6
8
9
001363-001

STROBE LIGHT, POST MOUNTED – ELECTRIC VEHICLES

ITEM	PART NO.	DESCRIPTION	QTY
		1 2 3 4	
1	105155501	Kit, Post Mtd. Strobe, Elec (includes items 2 through 10)	1
2	1015156	Light Assembly, Strobe	1
3	1015157	Cover Plate Switch - Pole Ca	1
4	1015187	Switch Assembly	1
5	102323501	Washer, Flat, 3/8, Blk Fin	4
6	105088601	Hhcs, 3/8 - 16 X 3.25, Black	2
7	105118601	Weldment, Post Mtd. Strobe	1
8	105204401	Wire Harness Asm,PM Strobe	1
9	105205301	Grommet,1/8-in groove	1
10	8754	Locknut, 3/8-16 Hex	2

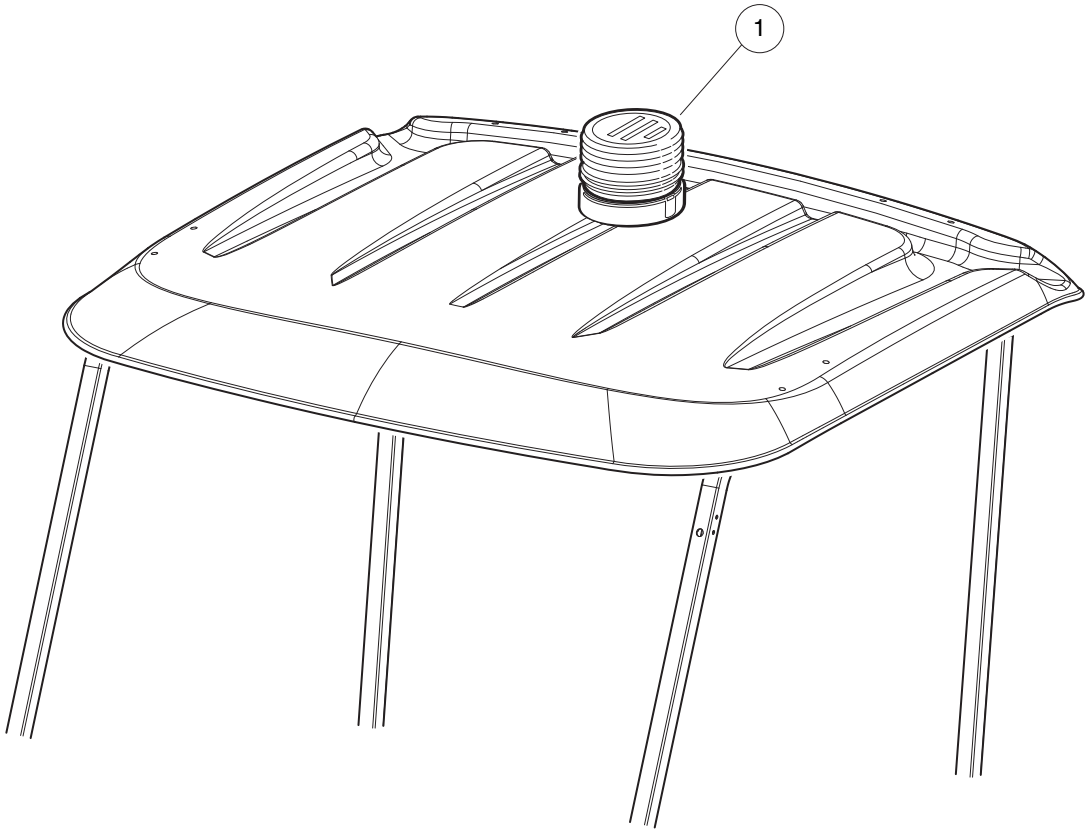

001364-001

STROBE LIGHT – CANOPY MOUNTED

ITEM	PART NO.	DESCRIPTION	QTY
		1 2 3 4	
1	105185101	Kit, Strobe, Canopy	1

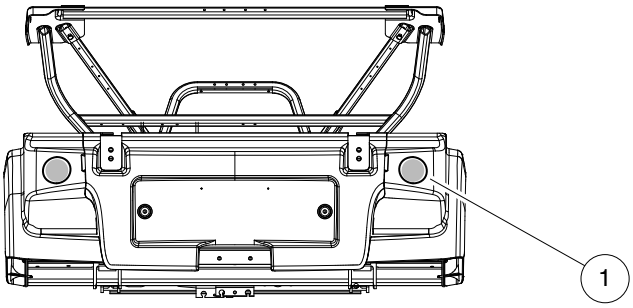

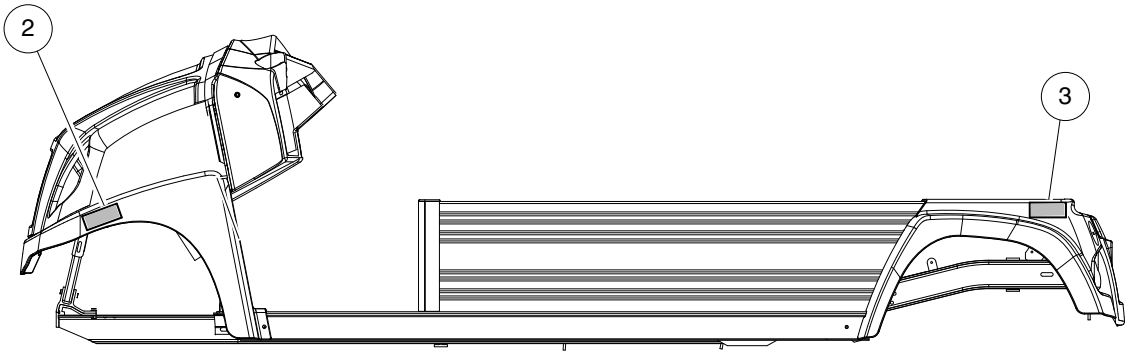

001362-001

REFLECTORS

ITEM	PART NO.	DESCRIPTION	QTY
		1 2 3 4	
1	103832501	Reflector, Red, Round, Sae	2
2	103832601	Reflector, Yell, Rect, Sae	2
3	105144801	Reflector, Red, Rect, Sae	2

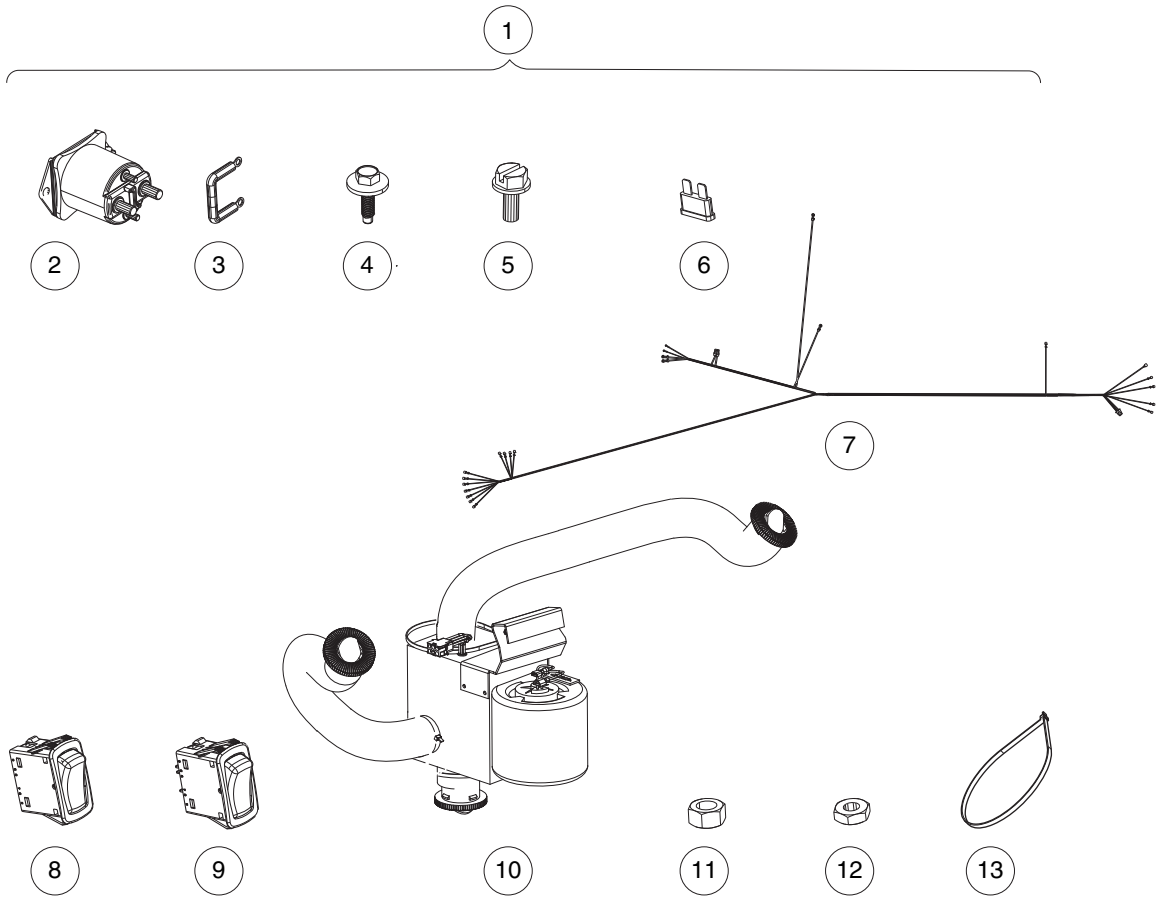

001366-002

HEATER DEFOGGER – ELECTRIC VEHICLE

ITEM	PART NO.	DESCRIPTION	QTY
		1 2 3 4	
1	105135802	Kit, Defogger, Heater (includes items 2 through 13)	1
2	1013609	Solenoid, 12-Volt	1
3	1014948	Diode	1
4	102297125	Screw, M6-1.0x25.4, Thread-Forming, SEMS	2
5	102817101	Screw, 1/4-20 X .50 Hex Wsh Hd	2
6	103541401	Fuse, Atc, 5 Amp	1
7	105108801	Harness, Heater, Cab, Util	1
8	105112501	Switch, Heater, 12vdc	1
9	105112601	Switch, Blower, 12vdc	1
10	N/A	Heater, Defogger	1
11	1242	Nut, 5/16-18 Hex	2
12	7893	Nut, #10-32 Hex	2
13	8639	Tie Wrap, 11" Nylon	8

4

G

E

BRAKES, PEDALS, AND CABLE ASSEMBLIES

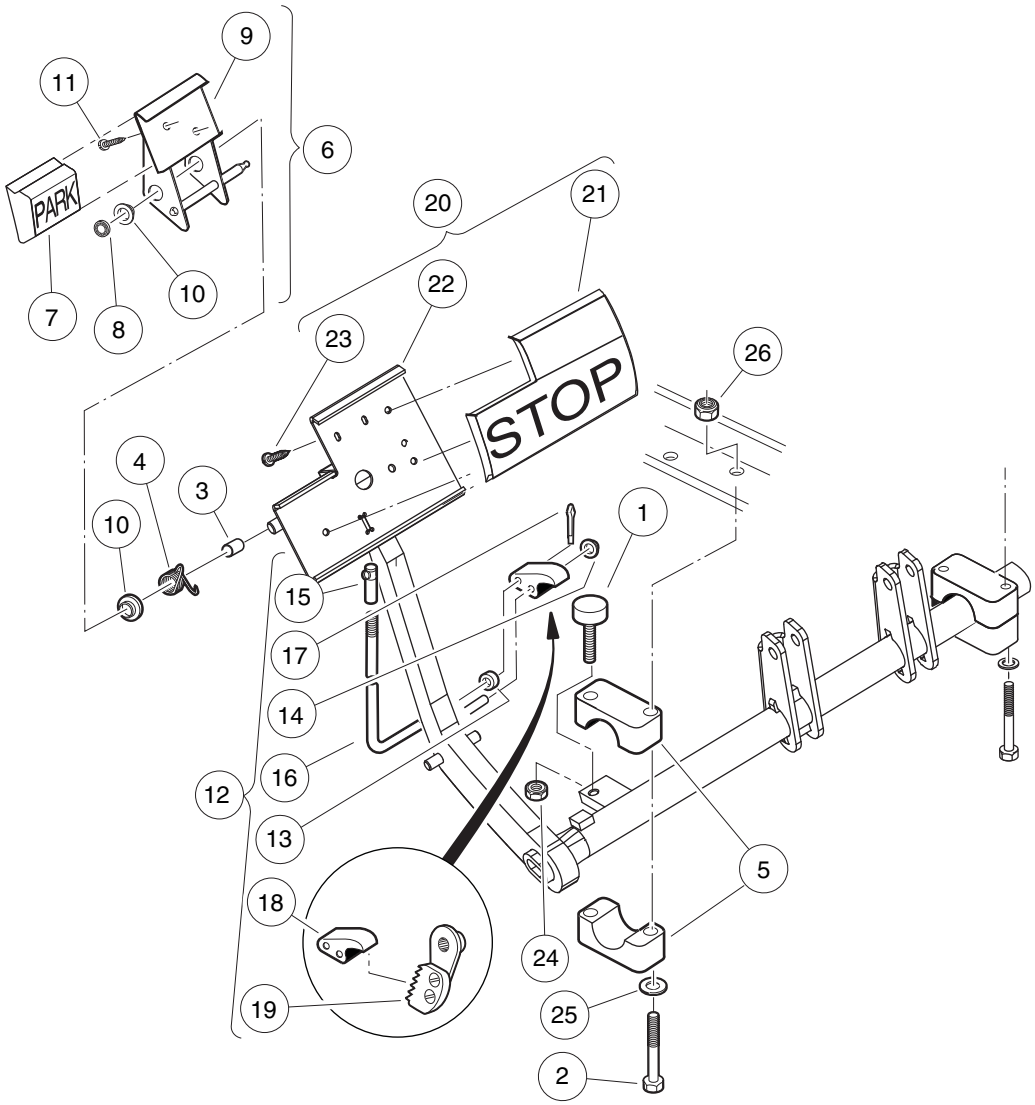

001405-002

BRAKE PEDAL ASSEMBLY – VEHICLES WITH 2-WHEEL BRAKES AND 4-WHEEL BRAKES

ITEM	PART NO.	DESCRIPTION	QTY
		1 2 3 4	
1	1010878	Bumper, Rubber	1
2	1010921	Screw, 5/16-18 X 2.50 Hex Cap	4
3	1010927	Hill Brake Spacer	1
4	1010933	Spring, Hill Brake Torsion	1
5	1011402	Package, Brake Mounting Block	1
6	1011418	Kit, Hill Brake Pedal (includes items 7 through 11)	1
7	1013870	Pad, Hill Brake	1
8	1013876	Pushnut, 3/8	1
9	N/A	Hill Brake Weld Assembly	1
10	1032	Bushing, Nylon	2
11	7716	Screw, #10-16 Type AB, Sheet Metal	2
12	101187702	Kit, Hill Brake Latch (includes items 13 through 19)	1
13	1010805	Sleeve, Hill Brake Rod	1
14	1010877	Pushnut, 3/8	1
15	1010932	Ball Joint, 1/4-28	1
16	N/A	Rod, Hill Brake	1
17	1017029	Pin, Cotter, 7/64 x 1/2 Stainless-Steel	1
18	N/A	Pawl, Hill Brake	1
19	101918501	Ratchet Assembly	1
20	101878201	Brake Pedal Kit (includes items 21 through 23)	1
21	1013869	Pad, Brake Pedal	1
22	N/A	Weldment, Brake Pedal, 2wr Std	1
23	7716	Screw, #10-16 Type AB, Sheet Metal	3
24	1028	Nut, 1/4-20 Hex	1
25	1241	Washer, 5/16 Type A Flat	4
26	7473	Locknut, 5/16-18 Nylon Insert	4

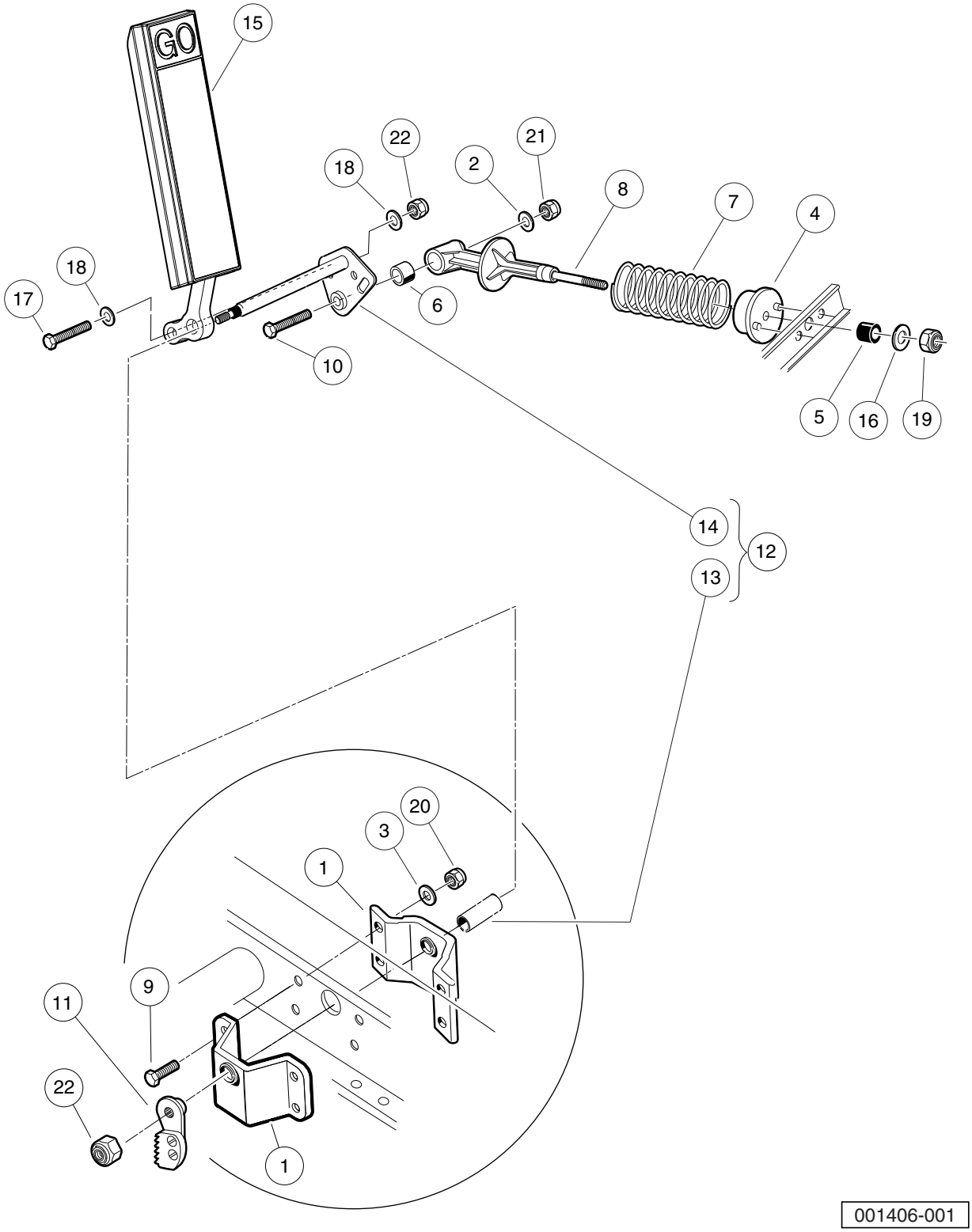
GO
15
22
21
18
2
8
7
4
18
17
6
10
5
16
19
14
12
13
20
3
1
9
11
22
1
001406-001

ACCELERATOR PEDAL ASSEMBLY – ELECTRIC VEHICLES

ITEM	PART NO.	DESCRIPTION	QTY
		1 2 3 4	
1	1011694	Accelerator Bracket and Bearing Assembly	2
2	1011931	Washer, 1/4 Flat	1
3	1014007	Washer, 1/4, Flat	4
4	1017378	Cup, Spring	1
5	1017380	Bumper, Spring Return	1
6	1017424	Bearing, Pivot Support	1
7	101796201	Spring, Accelerator Return	1
8	101817401	Retainer, Spring	1
9	101861901	Screw, 1/4-20 X 1.125 Hex Cap	4
10	101862001	Screw, 1/4-20 X 1.500 Flange	1
11	101918501	Ratchet Assembly	1
12	102026001	Kit, Accelerator Pivot Rod Assembly (includes items 13 and 14)	1
13	101919801	Spacer, Accelerator	1
14	102158901	Pivot Rod Weldment	1
15	103865101	Pedal, Accel, Insert	A/R
16	1241	Washer, 5/16 Type A Flat	1
17	1624	Screw, 3/8-16 X 1.50, Hex-Head Cap	1
18	334	Washer, 3/8, Type A, Flat	2
19	7473	Locknut, 5/16-18 Nylon Insert	1
20	8233	Locknut, 1/4-20, Nylon Insert	4
21	8717	Locknut, Nylon Insert, 1/4-28	1
22	8754	Locknut, 3/8-16 Hex	2

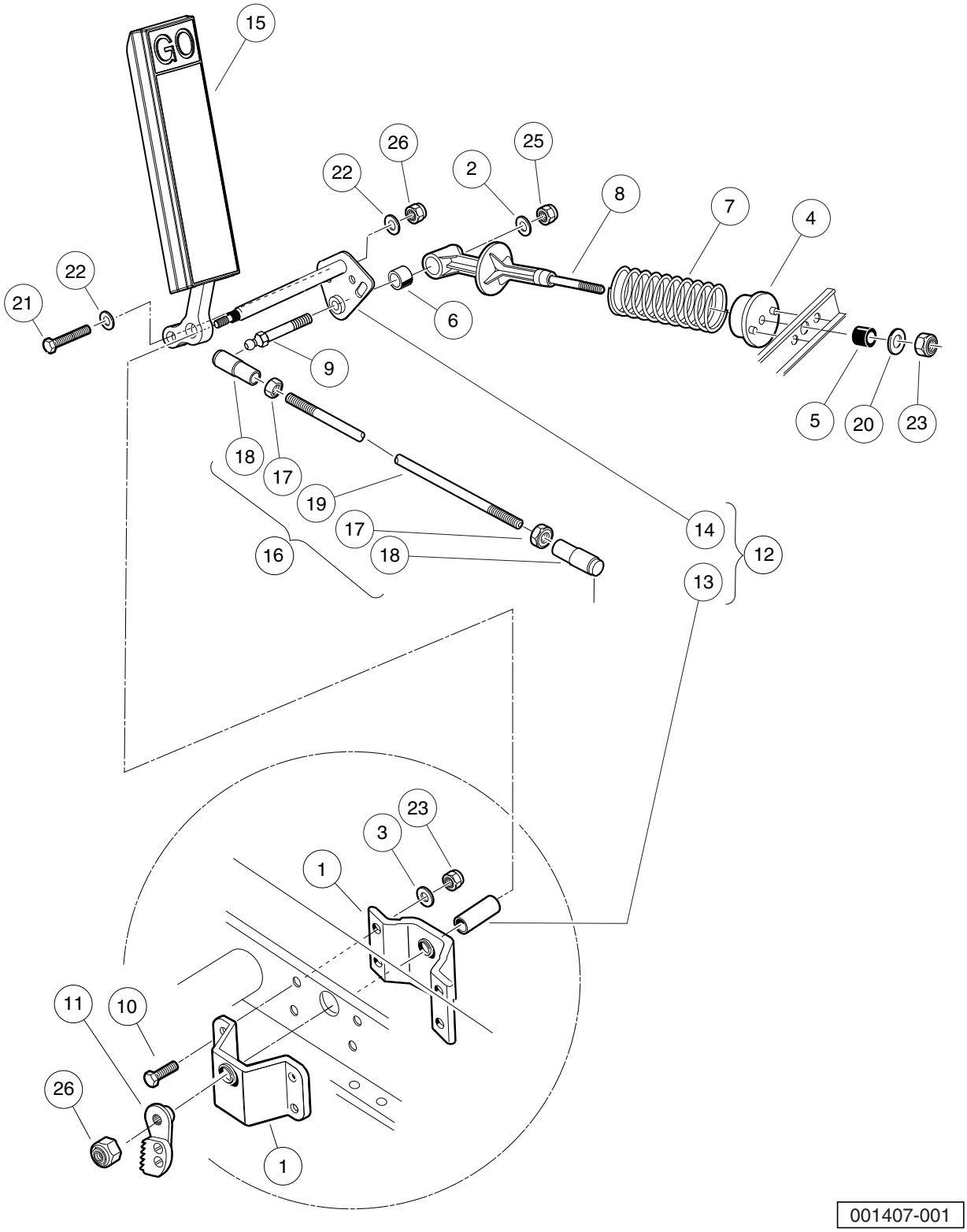
GO
15
26
22
2
25
8
7
4
22
21
6
9
5
20
23
18
17
19
17
18
16
14
12
13
23
3
1
11
10
26
1
001407-001

ACCELERATOR PEDAL AND ROD ASSEMBLY – GASOLINE VEHICLE

ITEM	PART NO.	DESCRIPTION	QTY
		1 2 3 4	
1	1011694	Accelerator Bracket and Bearing Assembly	2
2	1011931	Washer, 1/4 Flat	1
3	1014007	Washer, 1/4, Flat	4
4	1017378	Cup, Spring	1
5	1017380	Bumper, Spring Return	1
6	1017424	Bearing, Pivot Support	1
7	101796201	Spring, Accelerator Return	1
8	101817401	Retainer, Spring	1
9	101818801	Stud, 1/4-28 X 1.35 Ball	1
10	101861901	Screw, 1/4-20 X 1.125 Hex Cap	4
11	101918501	Ratchet Assembly	1
12	102026001	Kit, Accelerator Pivot Rod Assembly (includes items 13 and 14)	1
13	101919801	Spacer, Accelerator	1
14	102158901	Pivot Rod Weldment	1
15	103865101	Pedal, Accel, Insert	1
16	105100801	Asm, Accel Rod, Utility (includes items 17 through 19)	1
17	1011084	Nut, 1/4-28 Hex Jam	2
18	1011734	Joint, Ball	2
19	105100401	Rod, Accel, Utility, Adj	1
20	1241	Washer, 5/16 Type A Flat	1
21	1624	Screw, 3/8-16 X 1.50, Hex-Head Cap	1
22	334	Washer, 3/8, Type A, Flat	2
23	7473	Locknut, 5/16-18 Nylon Insert	1
24	8233	Locknut, 1/4-20, Nylon Insert	4
25	8717	Locknut, Nylon Insert, 1/4-28	1
26	8754	Locknut, 3/8-16 Hex	2

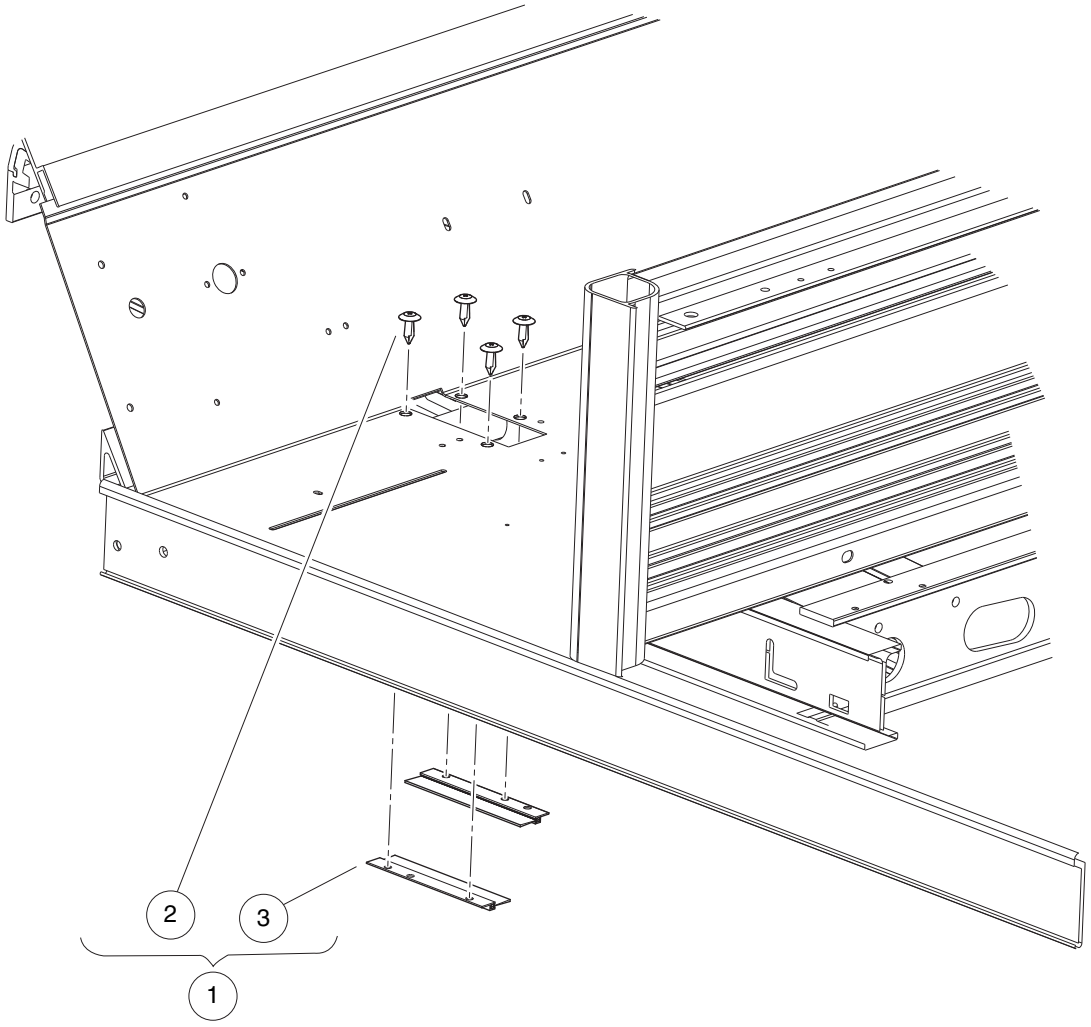

001418-001

PEDAL CLOSE-OUT KIT

ITEM	PART NO.	DESCRIPTION	QTY
		1 2 3 4	
1	105149101	Kit, Close Out, Pedal, Utl (includes items 2 and 3)	1
2	102025701	Screw, Tuflok Panel, 1/4	4
3	105149201	Asm, Brush, Pedal Close Out	2

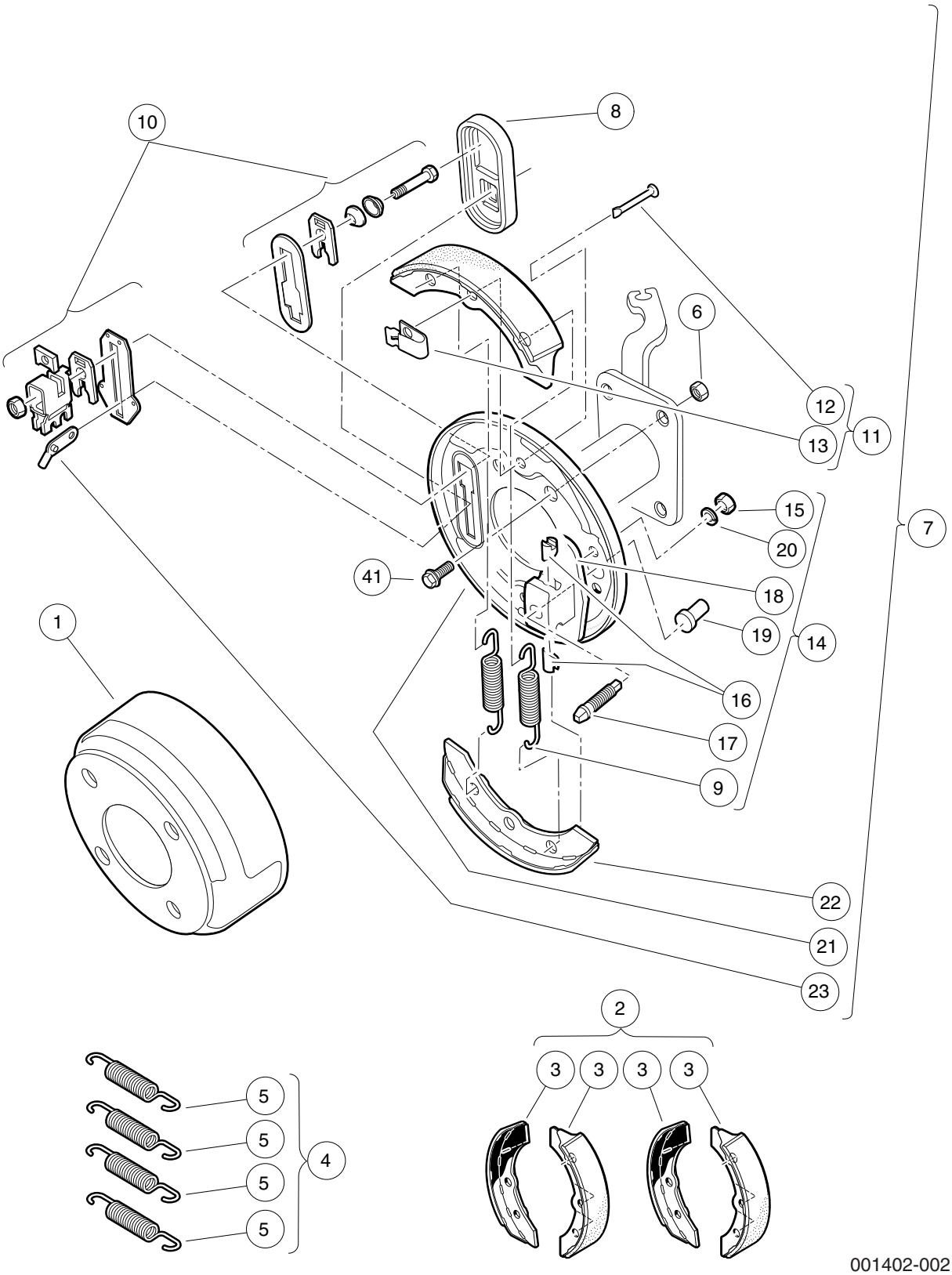
10
8
6
12
13
11
15
20
7
41
18
19
14
1
16
17
9
22
21
23
2
3
3
3
3
5
5
5
5
4
001402-002

FRONT BRAKE ASSEMBLY – VEHICLES WITH 4-WHEEL BRAKES

ITEM	PART NO.	DESCRIPTION	QTY
		1 2 3 4	
1	1011137	Drum, Brake	2
2	101146302	Kit, Non-Asbestos Brake Shoe (includes item 3)	1
3	101880701	Shoe Brake Manual Adj (Available in Kit, Non-Asbestos Brake Shoe)	4
4	1011464	Package, Brake Spring (includes item 5)	1
5	1011314	Brake Spring	4
6	1013924	Nut, 5/16-24, Hex Head Cone	8
7	1016557	Cluster, Brake, Driver-Side (includes items 8 through 23)	1
8	1010850	Dust Cover	1
9	1011314	Brake Spring	2
10	1011465	Kit, Brake Actuator	1
11	1011466	Kit, Shoe Retainer (includes items 12 and 13)	1
12	N/A	Pin	2
13	N/A	Shoe Clamp Spring	2
14	1011467	Kit, Anchor Body (includes items 15 through 20)	1
15	1011114	Nut, M6-1.00 Hex	2
16	1011298	Anchor Piston	2
17	N/A	Adjustment Bolt	1
18	N/A	Anchor Body Component	1
19	1011303	Adjustment Bolt Cap	1
20	451	Lockwasher, 1/4 Split	2
21	1011494	Backing Plate, Left-Hand	1
22	101880701	Shoe Brake Manual Adj (Available in Kit, Non-Asbestos Brake Shoe)	2
23	N/A	Arm, Brake Lever	1
24	1016573	Cluster, Brake, Passenger-Side (includes items 25 through 40)	1
25	1010850	Dust Cover	1
26	1011154	Backing Plate, Right-Hand	1
27	1011314	Brake Spring	2
28	1011465	Kit, Brake Actuator	1
29	1011466	Kit, Shoe Retainer (includes items 30 and 31)	1
30	N/A	Pin	2
31	N/A	Shoe Clamp Spring	2
32	1011467	Kit, Anchor Body (includes items 33 through 38)	1
33	1011114	Nut, M6-1.00 Hex	2
34	1011298	Anchor Piston	2
35	N/A	Adjustment Bolt	1
36	N/A	Anchor Body Component	1
37	1011303	Adjustment Bolt Cap	1
38	451	Lockwasher, 1/4 Split	2
39	101880701	Shoe Brake Manual Adj (Available in Kit, Non-Asbestos Brake Shoe)	2
40	N/A	Arm, Brake Lever	1
41	47542195001	Bolt, Brake Cluster Mnt	8
		Note: Passenger-side brake cluster (items 25-41) not shown. Components have a similar appearance to driver-side brake cluster components.	

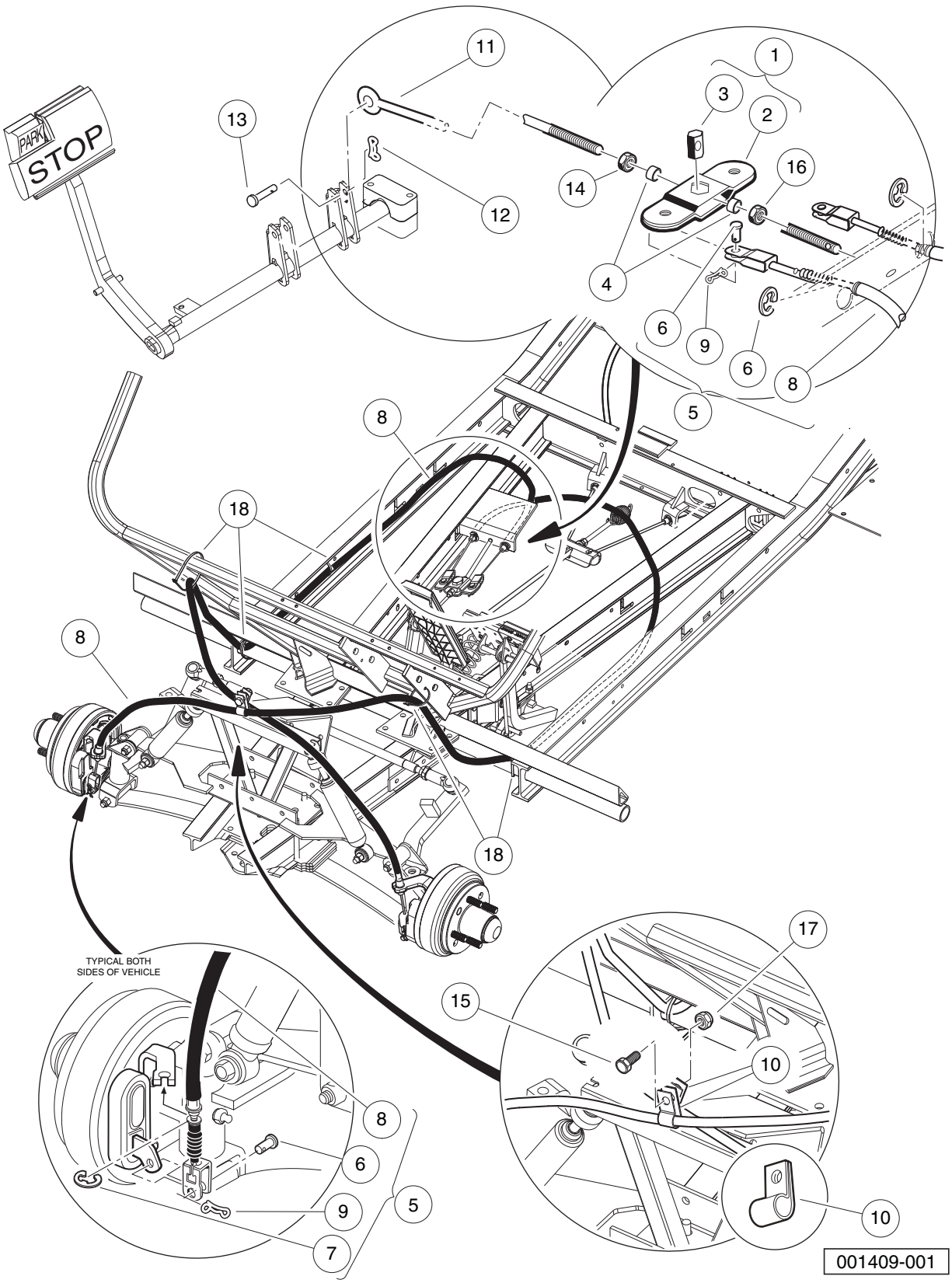
PARK
STOP
TYPICAL BOTH
SIDES OF VEHICLE
001409-001

FRONT BRAKE CABLES AND EQUALIZER – GASOLINE VEHICLE WITH 4-WHEEL BRAKES

ITEM	PART NO.	DESCRIPTION	QTY
		1 2 3 4	
1	1017211	Kit, Equalizer and Pivot Limiter (includes items 2 and 3)	1
2	1016319	Equalizer Weld Assembly	1
3	1016320	Equalizer, Pivot Limiter	1
4	101865301	Spacer	2
5	101874601	Kit, Brake Cable (includes items 6 through 9)	1
6	1010829	Pin, Clevis, 5/16 X 3/4	4
7	1011779	E-Clip, 1/2	4
8	N/A	Brake Cable	2
9	102292801	Pin, Bow Tie Locking - .072	4
10	101935301	Clamp, Brake Cable	2
11	101953106	Rod, Equalizer, 9.75"	1
12	102323101	Pin, Bow Tie Locking	1
13	102323201	Pin, 3/8 X 1-5/16 Clevis	1
14	1242	Nut, 5/16-18 Hex	1
15	320	Screw, 3/8-16 X 1.00 Hex-Head Cap	1
16	7473	Locknut, 5/16-18 Nylon Insert	1
17	8754	Locknut, 3/8-16 Hex	1
18	8990	Tie Wrap, 8" Nylon	5

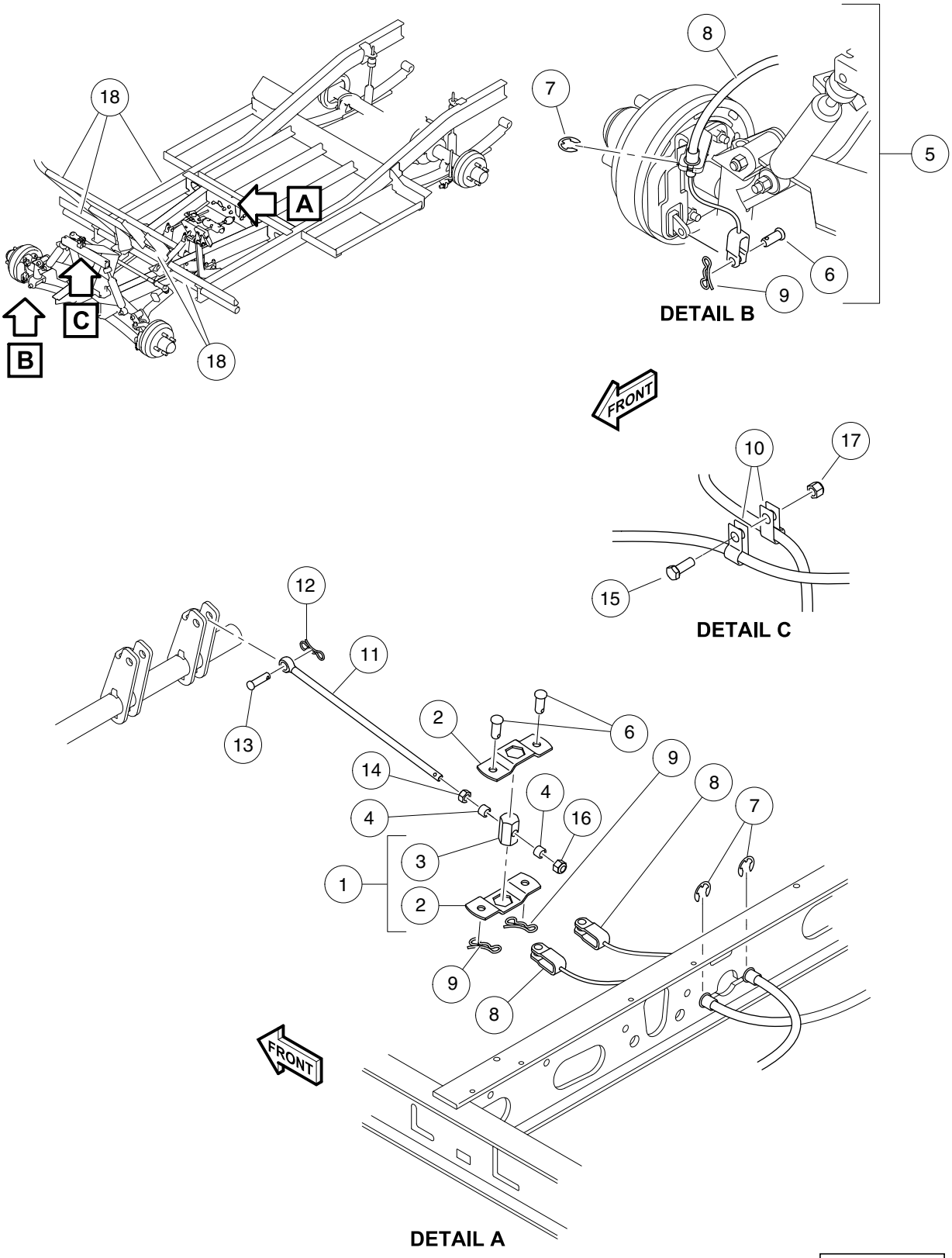
18
A
C
B
18
8
7
5
6
9
DETAIL B
FRONT
10
17
15
DETAIL C
12
11
13
2
6
9
8
7
14
4
4
16
3
1
2
9
8
FRONT
DETAIL A

001423-001

FRONT BRAKE CABLES AND EQUALIZER – ELECTRIC VEHICLE WITH 4-WHEEL BRAKES

ITEM	PART NO.	DESCRIPTION	QTY
		1 2 3 4	
1	1017211	Kit, Equalizer and Pivot Limiter (includes items 2 and 3)	1
2	1016319	Equalizer Weld Assembly	1
3	1016320	Equalizer, Pivot Limiter	1
4	101865301	Spacer	2
5	101874601	Kit, Brake Cable (includes items 6 through 9)	1
6	1010829	Pin, Clevis, 5/16 X 3/4	4
7	1011779	E-Clip, 1/2	4
8	N/A	Brake Cable	2
9	102292801	Pin, Bow Tie Locking - .072	4
10	101935301	Clamp, Brake Cable	2
11	101953106	Rod, Equalizer, 9.75"	1
12	102323101	Pin, Bow Tie Locking	1
13	102323201	Pin, 3/8 X 1-5/16 Clevis	1
14	1242	Nut, 5/16-18 Hex	1
15	320	Screw, 3/8-16 X 1.00 Hex-Head Cap	1
16	7473	Locknut, 5/16-18 Nylon Insert	1
17	8754	Locknut, 3/8-16 Hex	1
18	8990	Tie Wrap, 8" Nylon	5

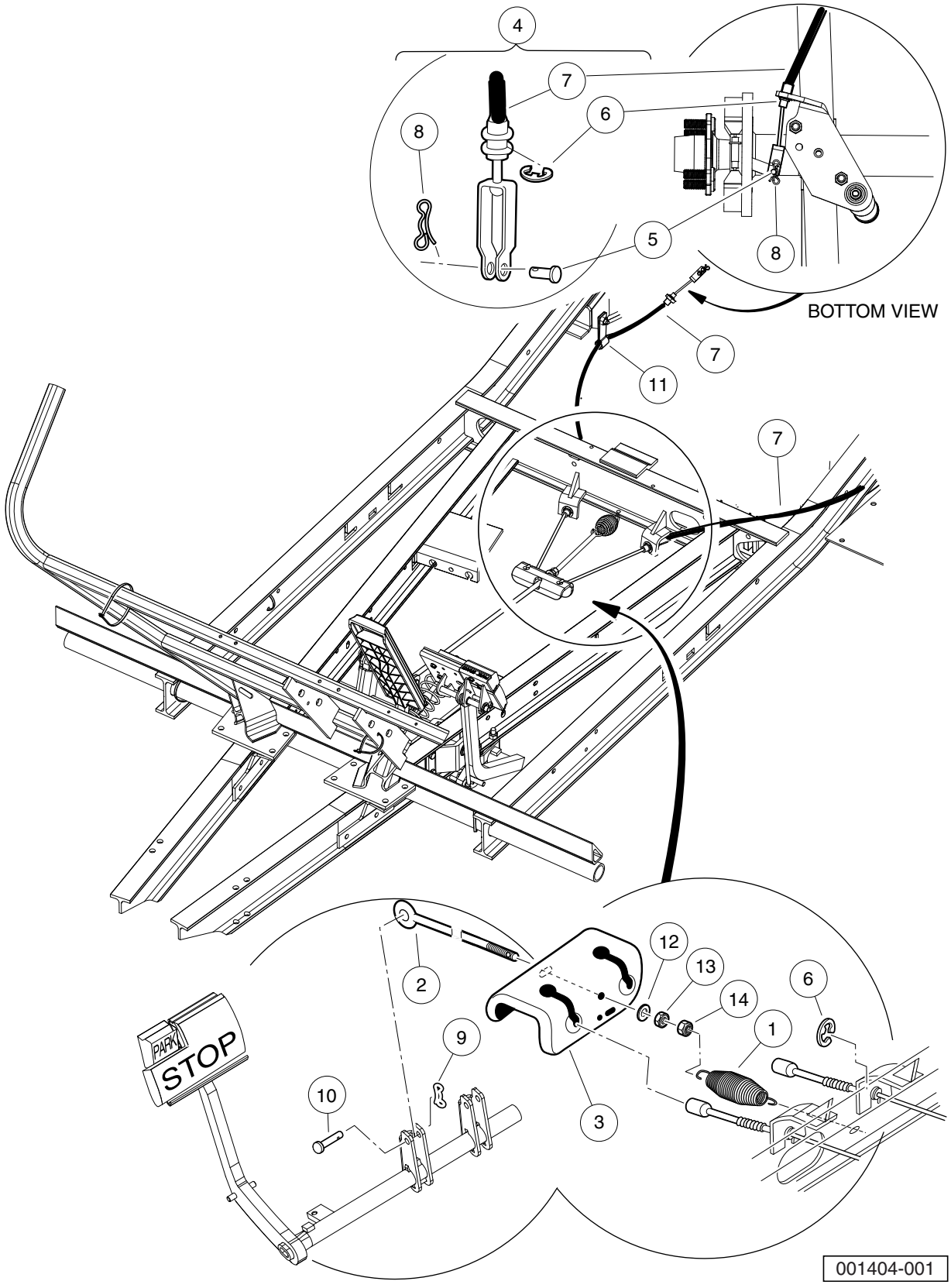
4
7
6
8
5
8
BOTTOM VIEW
7
11
7
12
13
6
14
1
2
9
10
3
PARK
STOP
001404-001

REAR BRAKE CABLES AND EQUALIZER – GASOLINE VEHICLE WITH 4-WHEEL BRAKES

ITEM	PART NO.	DESCRIPTION	QTY
		1 2 3 4	
1	1013531	Spring, Brake Return	1
2	101953102	Rod, Equalizer, 20.91 inch	1
3	101990801	Equalizer Bracket	1
4	102166901	Kit, Brake Cable Rear (includes items 5 through 8)	A/R
5	1010829	Pin, Clevis, 5/16 X 3/4	2
6	1011779	E-Clip, 1/2	4
7	102162601	Cable, Brake	2
8	102292801	Pin, Bow Tie Locking - .072	2
9	102323101	Pin, Bow Tie Locking	1
10	102323201	Pin, 3/8 X 1-5/16 Clevis	1
11	102891101	Clamp, Cable, Brake, Sym	2
12	1241	Washer, 5/16 Type A Flat	5
13	1242	Nut, 5/16-18 Hex	1
14	7473	Locknut, 5/16-18 Nylon Insert	5

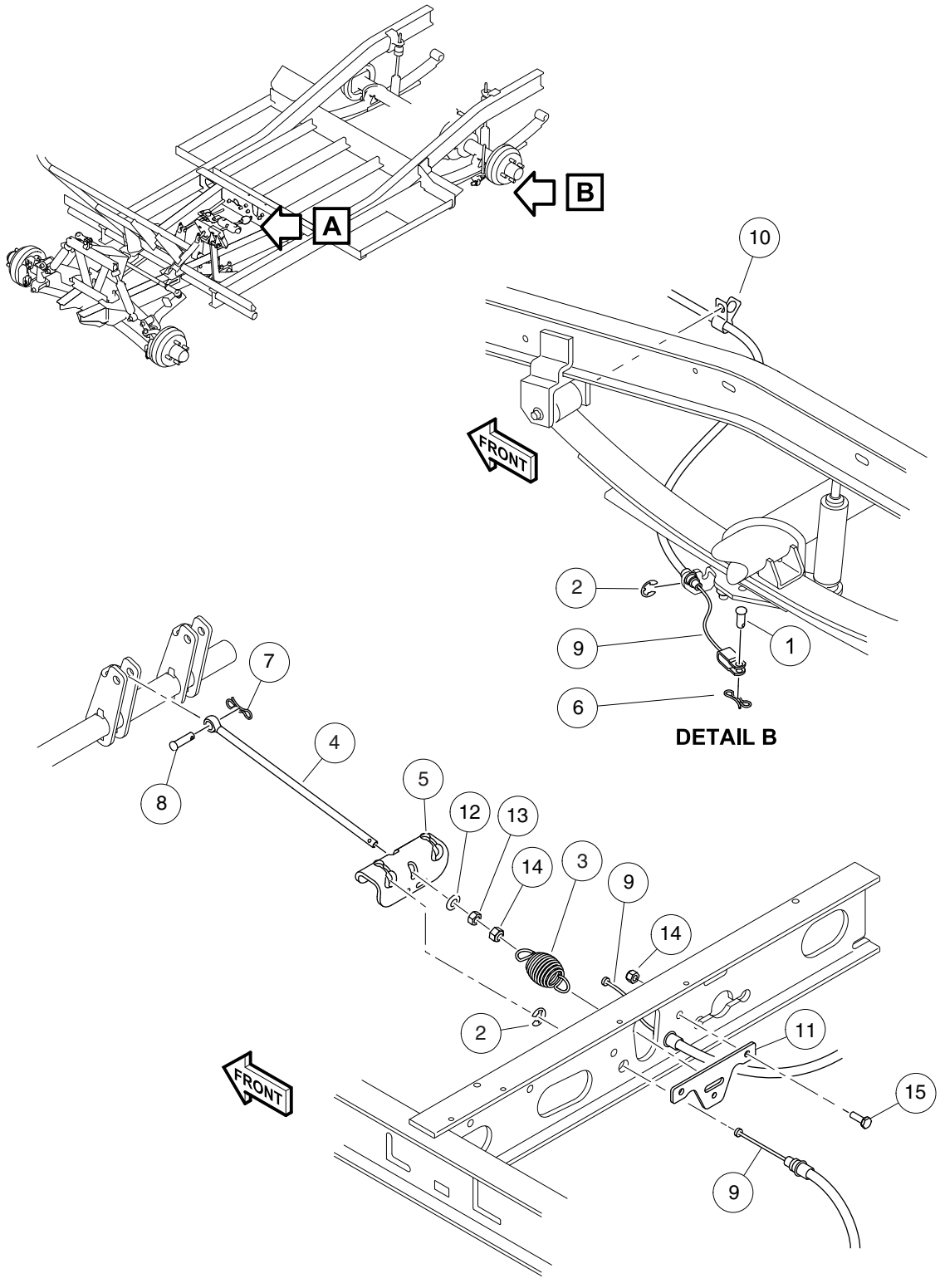
A
B
10
FRONT
2
9
1
6
DETAIL B
7
4
8
5
12
13
14
3
9
14
2
11
15
9
FRONT
DETAIL A

001424-001

REAR BRAKE CABLES AND EQUALIZER – ELECTRIC VEHICLE WITH 4-WHEEL BRAKES

ITEM	PART NO.	DESCRIPTION	QTY
		1 2 3 4	
1	1010829	Pin, Clevis, 5/16 X 3/4	2
2	1011779	E-Clip, 1/2	4
3	1013531	Spring, Brake Return	1
4	101953106	Rod, Equalizer, 9.75"	1
5	101990801	Equalizer Bracket	1
6	102292801	Pin, Bow Tie Locking - .072	2
7	102323101	Pin, Bow Tie Locking	1
8	102323201	Pin, 3/8 X 1-5/16 Clevis	1
9	102852103	Cable, Brake, 51" Sym	2
10	102891101	Clamp, Cable, Brake, Sym	2
11	105310301	Plate, Spring Return	1
12	1241	Washer, 5/16 Type A Flat	5
13	1242	Nut, 5/16-18 Hex	1
14	7473	Locknut, 5/16-18 Nylon Insert	3
15	7847	Screw, 1/4-20 X 0.75 Hex-Head Cap	2

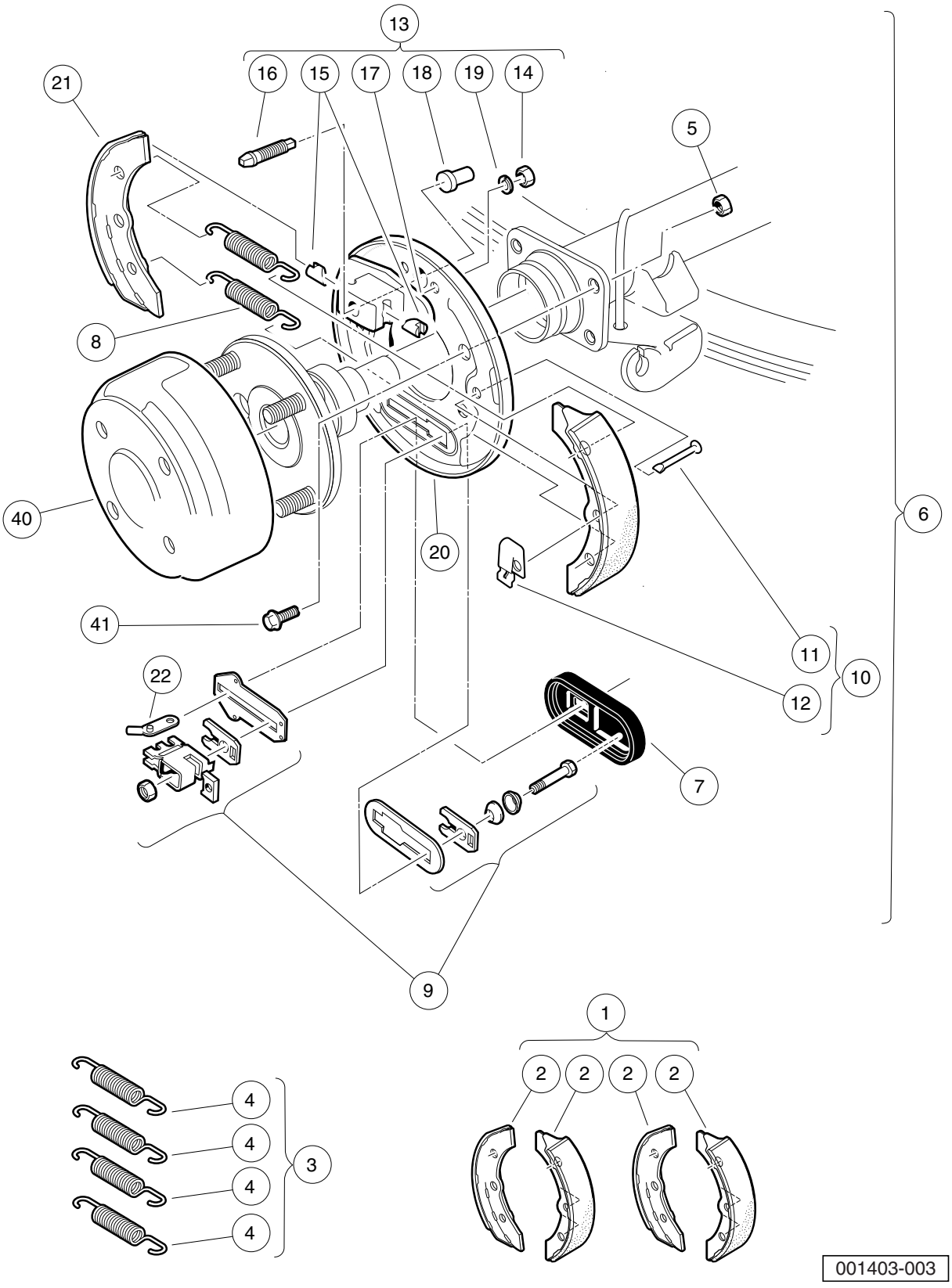
13
16
15
17
18
19
14
21
5
8
40
20
6
41
11
10
22
12
7
9
1
2
2
2
2
4
4
4
4
3
001403-003

REAR BRAKES, MANUALLY-ADJUSTED – ELEC. VEHICLES WITH 4-WHEEL BRAKES

ITEM	PART NO.	DESCRIPTION	QTY
		1 2 3 4	
1	101146302	Kit, Non-Asbestos Brake Shoe (includes item 2)	1
2	101880701	Shoe Brake Manual Adj (Available in Kit, Non-Asbestos Brake Shoe)	4
3	1011464	Package, Brake Spring (includes item 4)	1
4	1011314	Brake Spring	4
5	1013924	Nut, 5/16-24, Hex Head Cone	8
6	1016557	Cluster, Brake, Driver-Side (includes items 7 through 22)	1
7	1010850	Dust Cover	1
8	1011314	Brake Spring	2
9	1011465	Kit, Brake Actuator	1
10	1011466	Kit, Shoe Retainer (includes items 11 and 12)	1
11	N/A	Pin	2
12	N/A	Shoe Clamp Spring	2
13	1011467	Kit, Anchor Body (includes items 14 through 19)	1
14	1011114	Nut, M6-1.00 Hex	2
15	1011298	Anchor Piston	2
16	N/A	Adjustment Bolt	1
17	N/A	Anchor Body Component	1
18	1011303	Adjustment Bolt Cap	1
19	451	Lockwasher, 1/4 Split	2
20	1011494	Backing Plate, Left-Hand	1
21	101880701	Shoe Brake Manual Adj (Available in Kit, Non-Asbestos Brake Shoe)	2
22	N/A	Arm, Brake Lever	1
23	1016573	Cluster, Brake, Passenger-Side (includes items 24 through 39)	1
24	1010850	Dust Cover	1
25	1011154	Backing Plate, Right-Hand	1
26	1011314	Brake Spring	2
27	1011465	Kit, Brake Actuator	1
28	1011466	Kit, Shoe Retainer (includes items 29 and 30)	1
29	N/A	Pin	2
30	N/A	Shoe Clamp Spring	2
31	1011467	Kit, Anchor Body (includes items 32 through 37)	1
32	1011114	Nut, M6-1.00 Hex	2
33	1011298	Anchor Piston	2
34	N/A	Adjustment Bolt	1
35	N/A	Anchor Body Component	1
36	1011303	Adjustment Bolt Cap	1
37	451	Lockwasher, 1/4 Split	2
38	101880701	Shoe Brake Manual Adj (Available in Kit, Non-Asbestos Brake Shoe)	2
39	N/A	Arm, Brake Lever	1
40	101791101	Drum without Center Hole, Brake	2
41	47542195001	Bolt, Brake Cluster Mnt	8

Note: Passenger-side brake cluster (items 24-40) not shown. Components have a similar appearance to driver-side brake cluster components.

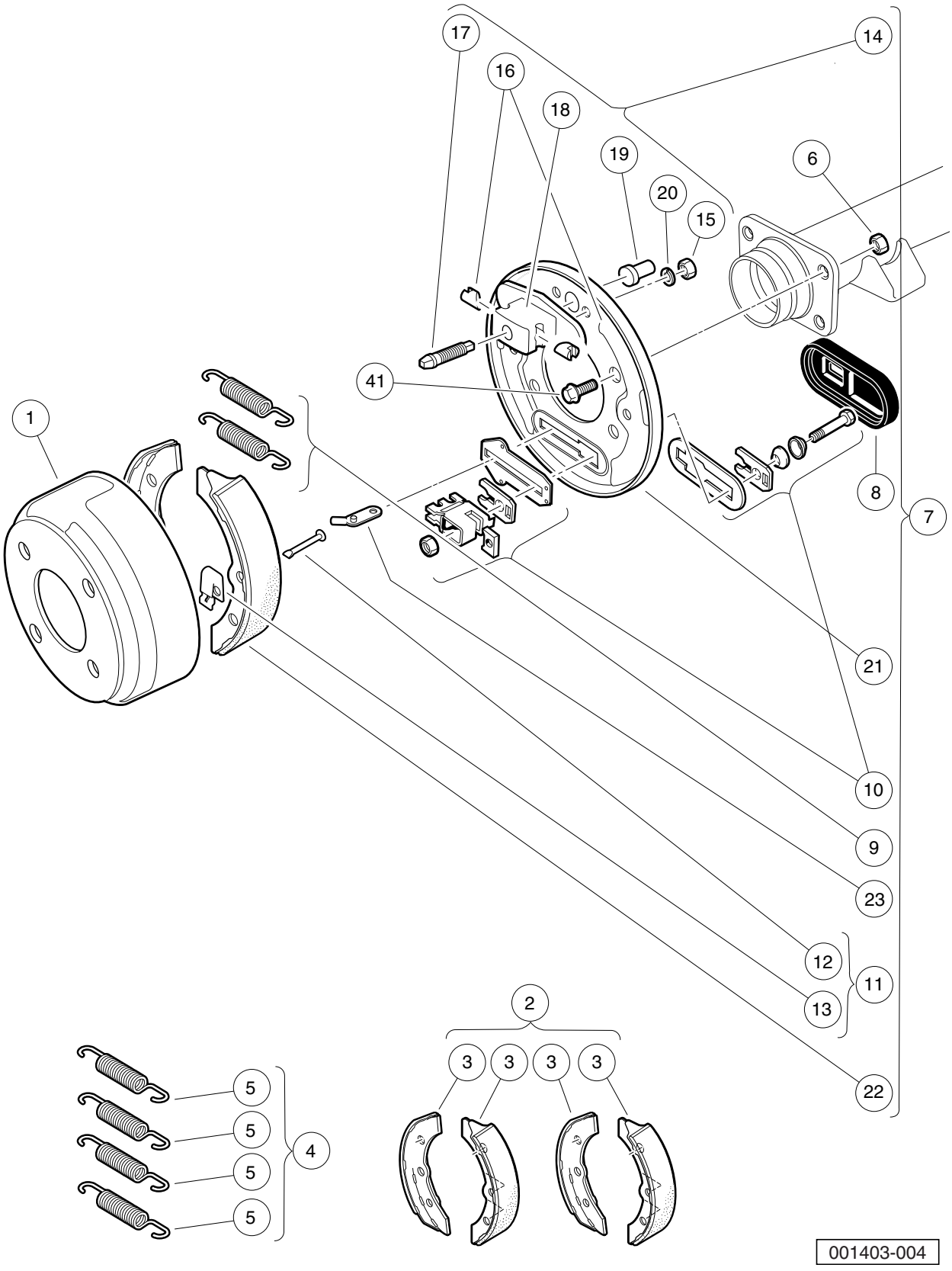
17
14
16
18
19
6
20
15
41
1
8
7
21
10
9
23
12
11
13
2
3
3
3
3
22
5
5
5
5
4
001403-004

REAR BRAKES, MANUALLY-ADJUSTED – GAS VEHICLES WITH 4-WHEEL BRAKES

ITEM	PART NO.	DESCRIPTION	QTY
		1 2 3 4	
1	1011137	Drum, Brake	2
2	101146302	Kit, Non-Asbestos Brake Shoe (includes item 3)	1
3	101880701	Shoe Brake Manual Adj (Available in Kit, Non-Asbestos Brake Shoe)	4
4	1011464	Package, Brake Spring (includes item 5)	1
5	1011314	Brake Spring	4
6	1013924	Nut, 5/16-24, Hex Head Cone	8
7	1016557	Cluster, Brake, Driver-Side (includes items 8 through 23)	1
8	1010850	Dust Cover	1
9	1011314	Brake Spring	2
10	1011465	Kit, Brake Actuator	1
11	1011466	Kit, Shoe Retainer (includes items 12 and 13)	1
12	N/A	Pin	2
13	N/A	Shoe Clamp Spring	2
14	1011467	Kit, Anchor Body (includes items 15 through 20)	1
15	1011114	Nut, M6-1.00 Hex	2
16	1011298	Anchor Piston	2
17	N/A	Adjustment Bolt	1
18	N/A	Anchor Body Component	1
19	1011303	Adjustment Bolt Cap	1
20	451	Lockwasher, 1/4 Split	2
21	1011494	Backing Plate, Left-Hand	1
22	101880701	Shoe Brake Manual Adj (Available in Kit, Non-Asbestos Brake Shoe)	2
23	N/A	Arm, Brake Lever	1
24	1016573	Cluster, Brake, Passenger-Side (includes items 25 through 40)	1
25	1010850	Dust Cover	1
26	1011154	Backing Plate, Right-Hand	1
27	1011314	Brake Spring	2
28	1011465	Kit, Brake Actuator	1
29	1011466	Kit, Shoe Retainer (includes items 30 and 31)	1
30	N/A	Pin	2
31	N/A	Shoe Clamp Spring	2
32	1011467	Kit, Anchor Body (includes items 33 through 38)	1
33	1011114	Nut, M6-1.00 Hex	2
34	1011298	Anchor Piston	2
35	N/A	Adjustment Bolt	1
36	N/A	Anchor Body Component	1
37	1011303	Adjustment Bolt Cap	1
38	451	Lockwasher, 1/4 Split	2
39	101880701	Shoe Brake Manual Adj (Available in Kit, Non-Asbestos Brake Shoe)	2
40	N/A	Arm, Brake Lever	1
41	47542195001	Bolt, Brake Cluster Mnt	8
		Note: Passenger-side brake cluster (items 25-41) not shown. Components have a similar appearance to driver-side brake cluster components.	

5

G

E

STEERING, FRONT AND REAR SUSPENSION

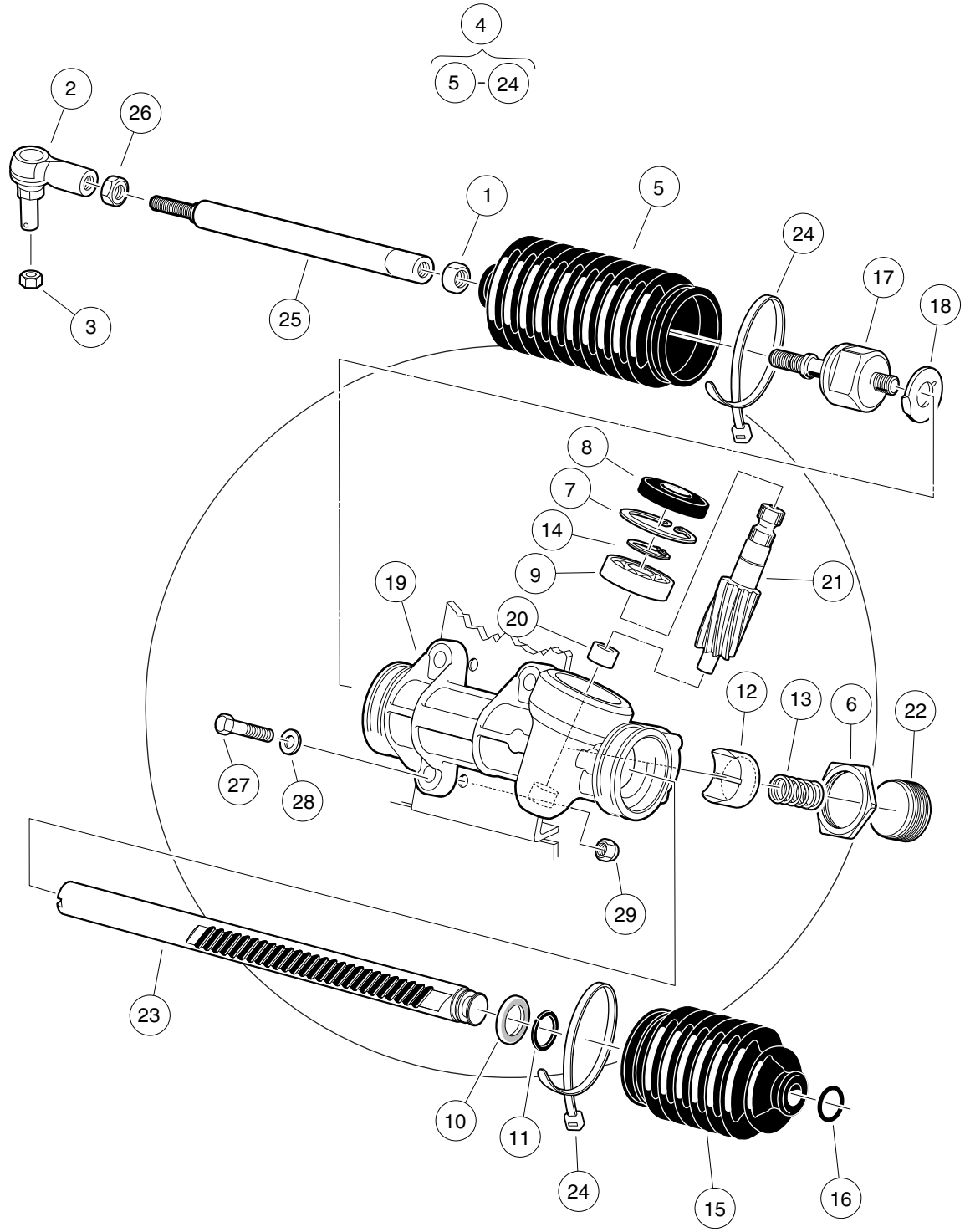
4
5
24
2
26
1
5
24
17
18
3
25
8
7
14
9
19
20
21
12
13
6
22
27
28
29
23
10
11
24
15
16

001500-002

STEERING GEAR ASSEMBLY

ITEM	PART NO.	DESCRIPTION	QTY
		1 2 3 4	
1	1013042	Nut, 12mm Hex	1
2	102022602	End, Tie Rod, M12 X 1.25, Lh	1
3	102289201	Nut - Hex Locking, M12 X 1.25	1
4	103601501	Asm, Steering Rack And Pinion (includes items 5 through 24)	1
5	1013035	Bellows, Long	1
6	1013044	Rack Screw Locknut	1
7	N/A	Snap Ring	1
8	1013052	Seal, Steering Pinion Dust	1
9	101879401	Bearing, Ball	1
10	101879501	Stop Washer	1
11	101879601	Stop Ring, C-Type	1
12	101879701	Support Yoke	1
13	101879801	Rack Guide Pressure Spring	1
14	101879901	Ring, Stop, C-Type	1
15	101880001	Bellows, Short	1
16	101880101	Dust Seal Retaining Ring	1
17	101880201	Inner Ball Joint Asm	1
18	101880301	Washer, Tab	1
19	N/A	Box, Steering Gear	1
20	N/A	Bearing, Lower Pinion	1
21	N/A	Pinion, Steering	1
22	N/A	Screw, Rack Guide	1
23	N/A	Rack, Steering	1
24	8990	Tie Wrap, 8" Nylon	2
25	103653401	Link, Drag, Male Thd	1
26	103653501	Nut, Jam, M12-1.25, Lh	1
27	1624	Screw, 3/8-16 X 1.50, Hex-Head Cap	3
28	334	Washer, 3/8, Type A, Flat	3
29	8754	Locknut, 3/8-16 Hex	3

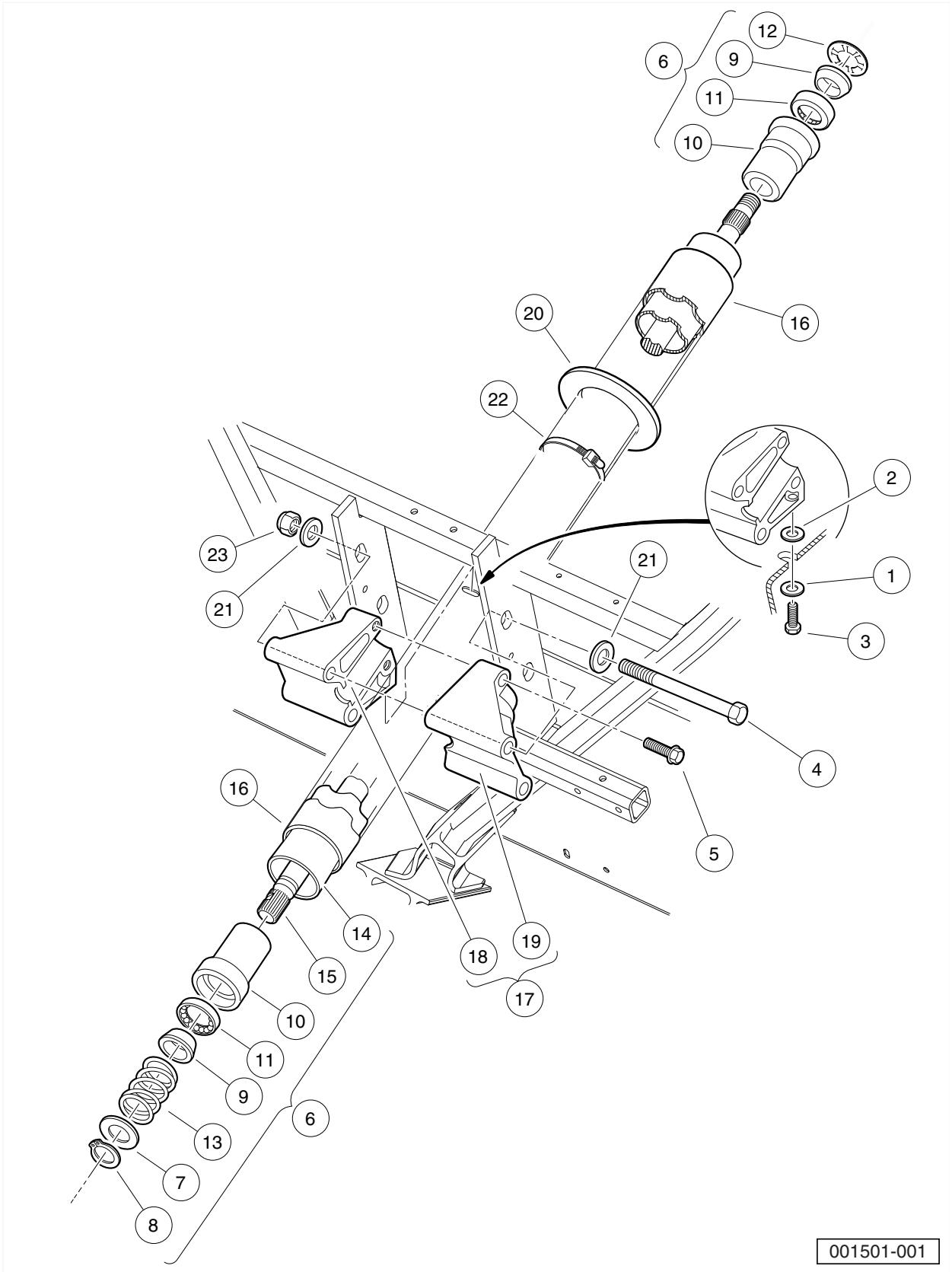
12
6
9
11
10
20
16
22
2
23
21
21
1
3
4
16
5
14
18
19
15
17
10
11
9
6
13
7
8
001501-001

ITEM	PART NO.	DESCRIPTION	QTY
		1 2 3 4	
1	1011697	Washer, 5/16 Flat	1
2	1012571	Washer, 5/16 Extra Thick Flat	1
3	1014288	Screw, 5/16-18 X 0.75, Thread-Forming	1
4	1016183	Screw, 3/8-16 X 7.00 Hex Cap	2
5	1016269	Screw, 5/16-18 Thrd Forming	2
6	1017313	Steering Shaft Assembly (includes items 7 through 15)	1
7	1012604	Washer, 0.675 ID X 1.19 OD	1
8	1012605	Ring, 0.579 Internal Retaining	1
9	1014125	Wedge, Molded	2
10	1014126	Seat, Plastic Bearing	2
11	1014213	Bearing, Ball	2
12	1014214	Ring, Retaining	1
13	1014217	Spring, Steering Shaft	1
14	1017314	Column, Aluminum Steering	1
15	1017315	Shaft Steering Column	1
16	1017317	Tube Cover, Steering Column	1
17	101984801	Kit, Steering Column Mounting Bracket (includes items 18 and 19)	1
18	N/A	Bracket, RH Steering Column Mount	1
19	N/A	Bracket, LH Steering column mount	1
20	102278001	Boot, Steering Column Round	1
21	334	Washer, 3/8, Type A, Flat	4
22	8639	Tie Wrap, 11" Nylon	1
23	8754	Locknut, 3/8-16 Hex	2

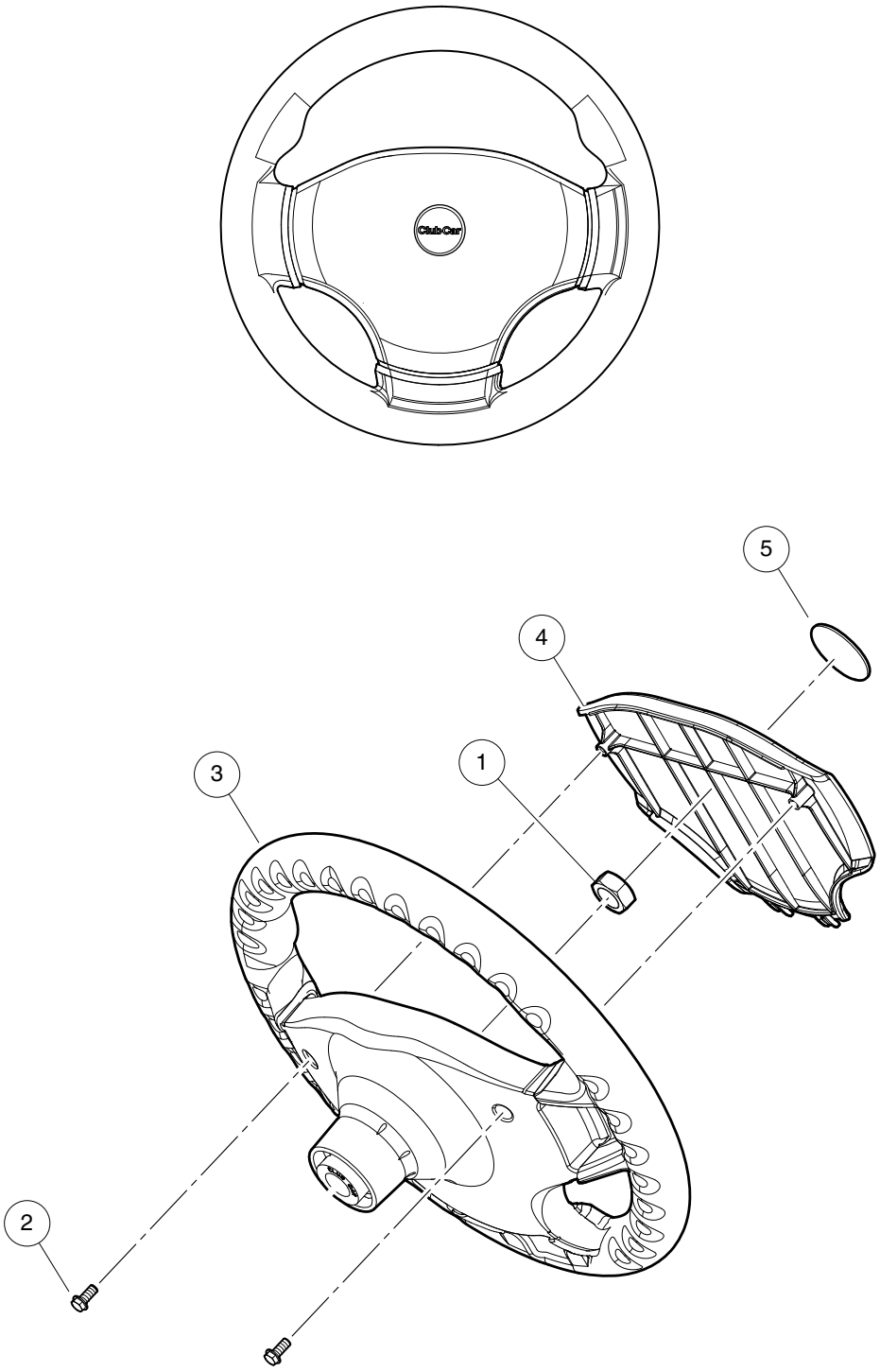

001503-001

STEERING WHEEL

ITEM	PART NO.	DESCRIPTION	QTY
		1 2 3 4	
1	1017273	Nut, 5/8-18 Nylon Insert Jam	1
2	101850301	Screw, #12-16 X 0.50 Washer-Head Hi-Lo	2
3	103724504	Steering Wheel, Soft Spl	1
4	103724602	Cover, Steering Wheel, Generic	1
5	103829401	Logo, Cci, Steer Wheel	1

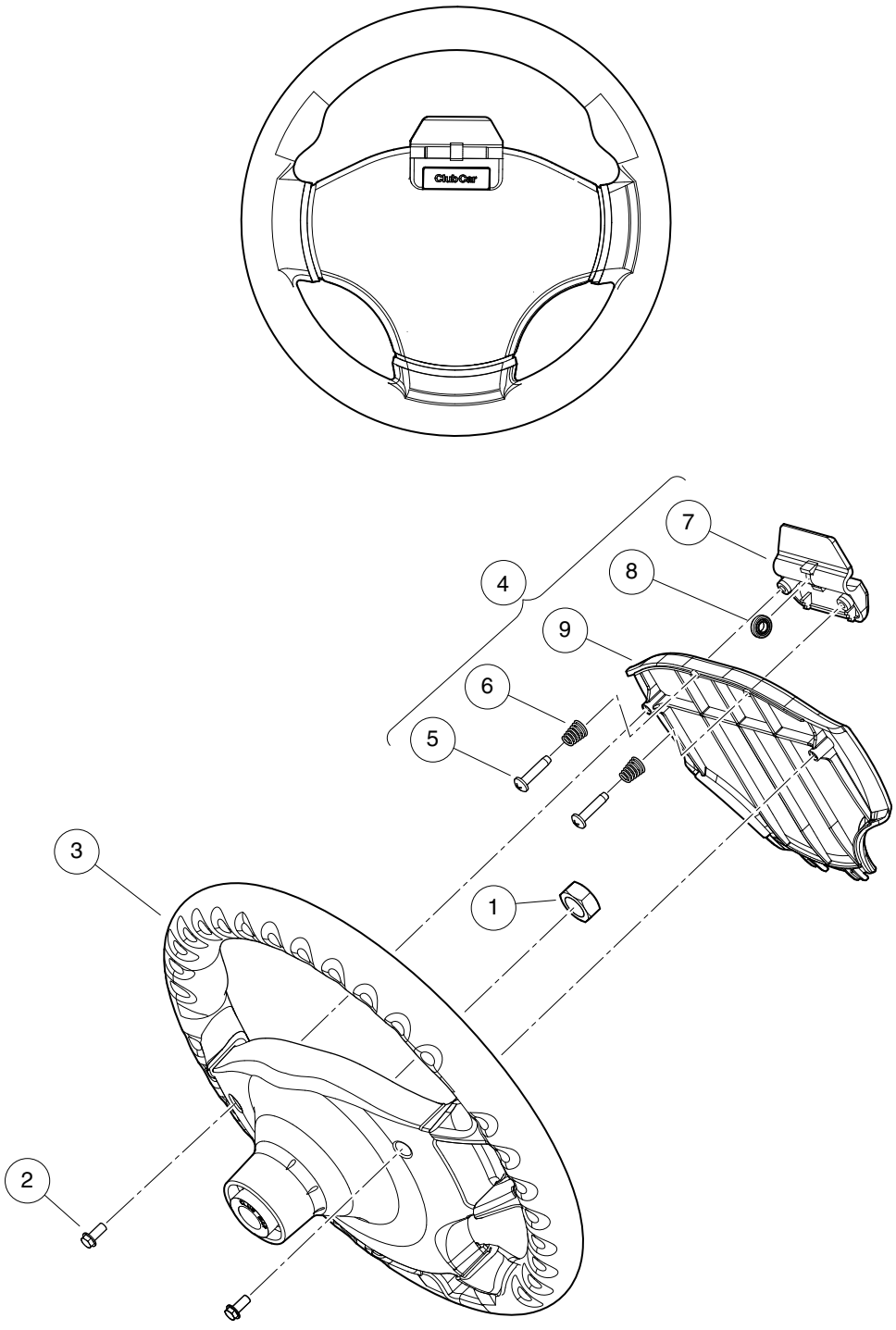

001504-001

STEERING WHEEL WITH CLIP

ITEM	PART NO.	DESCRIPTION	QTY
		1 2 3 4	
1	1017273	Nut, 5/8-18 Nylon Insert Jam	1
2	101850301	Screw, #12-16 X 0.50 Washer-Head Hi-Lo	2
3	103724504	Steering Wheel, Soft Spl	1
4	103724901	Asm, Scorecard, Clip (includes items 5 through 9)	1
5	1012565	Screw, #12 Phillips Round Head	2
6	1012566	Tapered Compression Spring	2
7	1016154	Clip, Scorecard	1
8	1016214	Pencil Grip	1
9	103724601	Cover, Steering Wheel, Clip	1

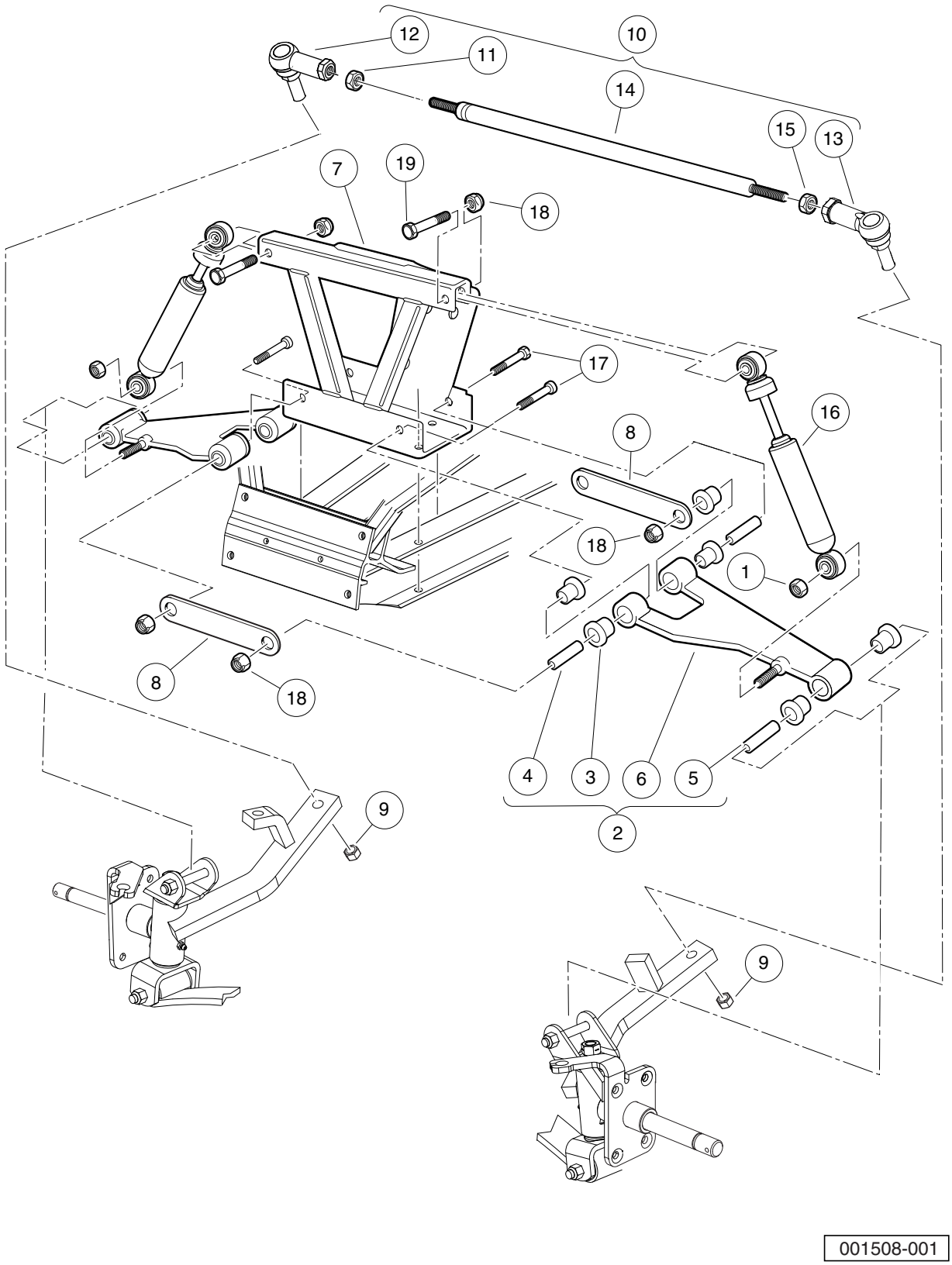
12
11
10
14
15
13
7
19
18
17
16
8
18
1
8
18
4
3
6
5
2
9
9
001508-001

FRONT SUSPENSION, UPPER, STD

ITEM	PART NO.	DESCRIPTION	QTY
		1 2 3 4	
1	1010138	Locknut, 3/8-16 Dimpled	2
2	1016353	Sub-Assembly, Delta A-Plate (includes items 3 through 6)	2
3	1016346	Bushing, Urethane	6
4	1016349	Sleeve, Delta Inner	2
5	1016350	Sleeve, Delta Outer	1
6	1016351	Delta A-Plate	1
7	101638502	Weldment, Shock & Gear, Ca	1
8	1017266	A-Plate Strap	2
9	102289201	Nut - Hex Locking, M12 X 1.25	2
10	103653601	Asm, Tie Rod (includes items 11 through 15)	1
11	1013042	Nut, 12mm Hex	1
12	102022601	End, Tie Rod M12 X 1.25 Rh	1
13	102022602	End, Tie Rod, M12 X 1.25, Lh	1
14	103354701	Rod, Tie, Male Thd	1
15	103653501	Nut, Jam, M12-1.25, Lh	1
16	105106601	Shock Absorber, Front, 1 Bumper	2
17	2402	Screw, 3/8-16 X 2.25 Hx Hd Cap	4
18	8754	Locknut, 3/8-16 Hex	6
19	8861	Bolt, 3/8-16 X 1.75 Hex	2

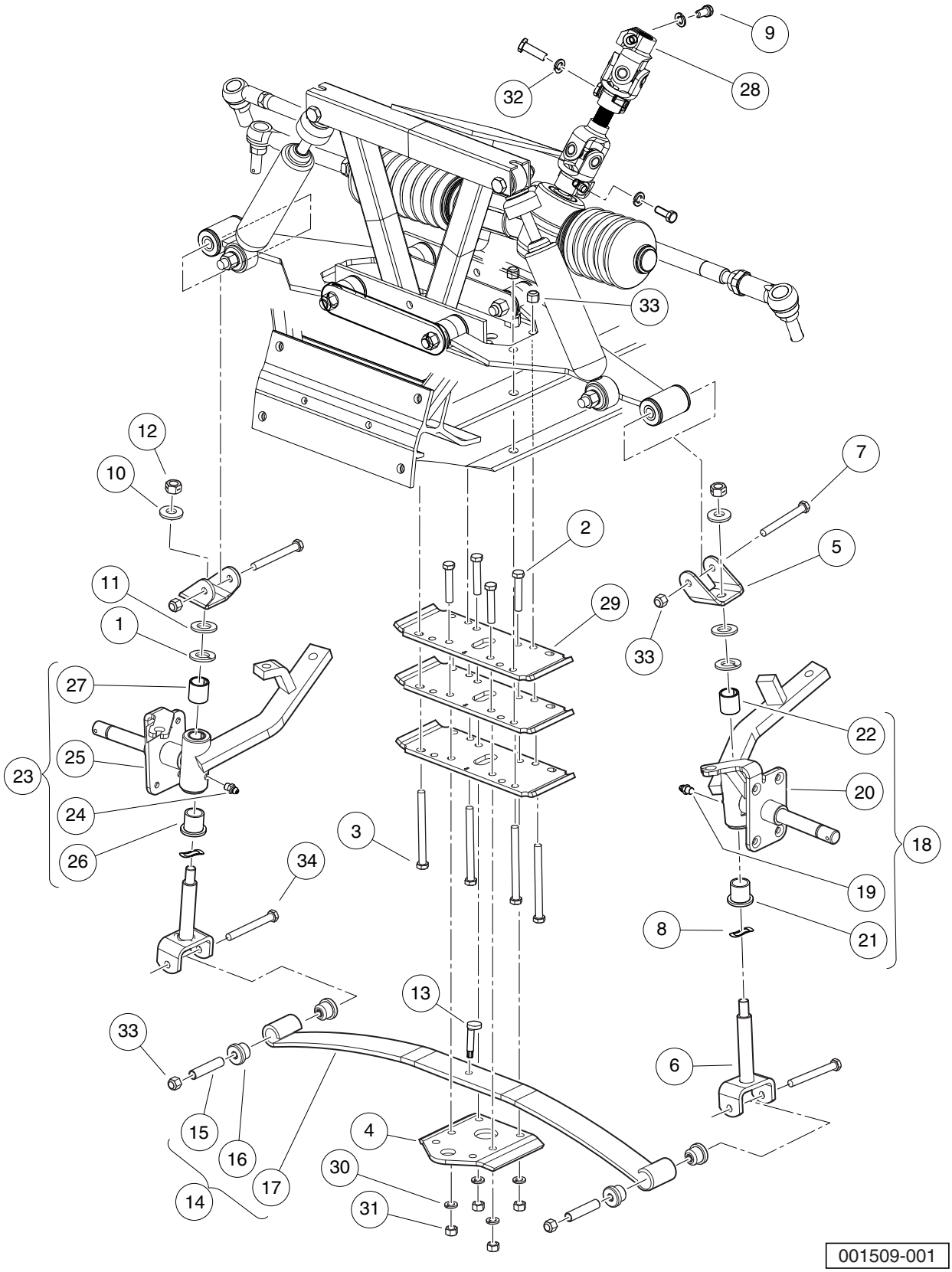
9
32
28
33
12
10
7
2
5
11
29
1
33
27
22
25
20
23
24
3
18
26
34
19
8
21
13
33
6
15
4
16
30
17
14
31
001509-001

FRONT SUSPENSION, LOWER, STD, 1 LEAF-3 PLATES

ITEM	PART NO.	DESCRIPTION	QTY
		1 2 3 4	
1	1010150	Bearing, Thrust	2
2	1010177	Bolt, 3/8-16 X 2.00 Hex Head	4
3	1010200	Bolt, 3/8-16 X 4.25 Hex Head	4
4	1014276	Plate, Front Spring Retainer	1
5	1016384	Clevis, Delta Upper	2
6	1016386	King Pin Assembly	2
7	1016387	Screw, 3/8-16 X 2.75 Hx Hd Cap	2
8	1016389	Washer, 1.125 Od Wave	2
9	1017226	Bolt, Hex-Head, 8mm X 1.25 - 30	3
10	102564002	Washer-1/2 Conical, Yellow	2
11	102684501	Washer, M12 Hard Regular	2
12	102766301	Nut, 1/2-20, Center Lock	2
13	103507001	Eccentric Bolt Common	1
14	103628701	Spring Asm, Front, 1 Leaf (includes items 15 through 17)	1
15	1012303	Bushing, Steel	2
16	101558302	Bushing, Urethane, Soft	4
17	103502601	Spring, Front, 1 Leaf	1
18	103717302	Asm, Spindle, Lh, 4wb, Sp (includes items 19 through 22)	1
19	1015597	Fitting, 1/4-28 Thread-Forming Grease	1
20	N/A	Subasm, Spindle, Lh, 4wb	1
21	7048	Bushing, Flanged Bronze	1
22	8067	Bushing, Bronze Spindle	1
23	103717402	Asm, Spindle, Rh, 4wb, Sp (includes items 24 through 27)	1
24	1015597	Fitting, 1/4-28 Thread-Forming Grease	1
25	N/A	Subasm, Spindle, Rh, 4wb	1
26	7048	Bushing, Flanged Bronze	1
27	8067	Bushing, Bronze Spindle	1
28	105074201	Shaft, Int, Steering, Sus Fwd	1
29	105083301	Plate, Spring Mount, Restyle	3
30	357	Lockwasher, 3/8 Split	4
31	706	Nut, Hex 3/8-16	5
32	7174	Lockwasher, 5/16 Split	3
33	8754	Locknut, 3/8-16 Hex	8
34	8755	Screw, 3/8-16 X 3.375 Hex Cap	2

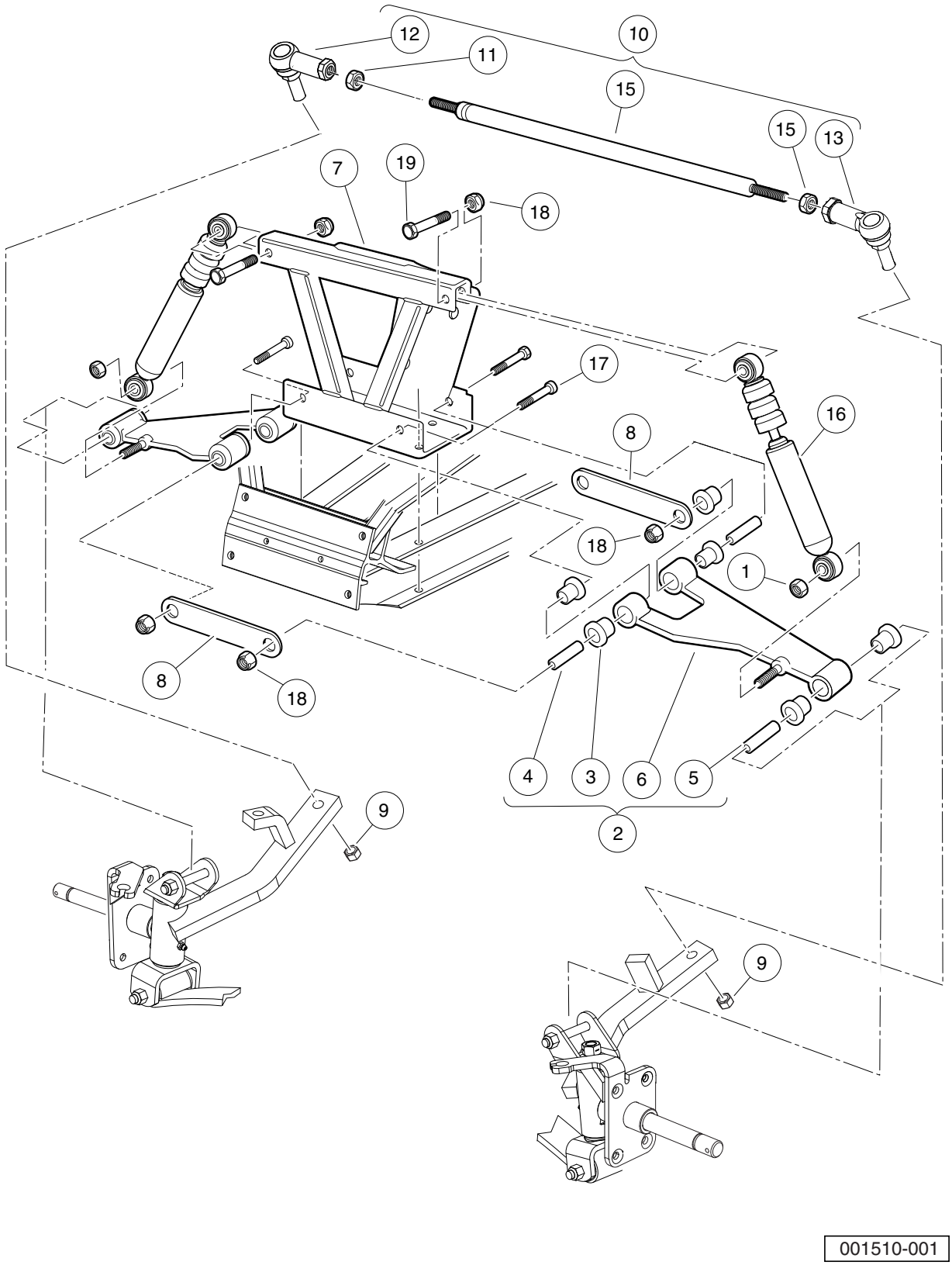
12
11
10
15
15
13
7
19
18
17
16
8
18
1
8
18
4
3
6
5
2
9
9
001510-001

FRONT SUSPENSION, UPPER, HD

ITEM	PART NO.	DESCRIPTION	QTY
		1 2 3 4	
1	1010138	Locknut, 3/8-16 Dimpled	2
2	1016353	Sub-Assembly, Delta A-Plate (includes items 3 through 6)	2
3	1016346	Bushing, Urethane	6
4	1016349	Sleeve, Delta Inner	2
5	1016350	Sleeve, Delta Outer	1
6	1016351	Delta A-Plate	1
7	101638502	Weldment, Shock & Gear, Ca	1
8	1017266	A-Plate Strap	2
9	102289201	Nut - Hex Locking, M12 X 1.25	2
10	103653601	Asm, Tie Rod (includes items 11 through 15)	1
11	1013042	Nut, 12mm Hex	1
12	102022601	End, Tie Rod M12 X 1.25 Rh	1
13	102022602	End, Tie Rod, M12 X 1.25, Lh	1
14	103354701	Rod, Tie, Male Thd	1
15	103653501	Nut, Jam, M12-1.25, Lh	1
16	105106702	Shock Absorb, Frnt, 3 Bump Ele	2
17	2402	Screw, 3/8-16 X 2.25 Hx Hd Cap	4
18	8754	Locknut, 3/8-16 Hex	6
19	8861	Bolt, 3/8-16 X 1.75 Hex	2

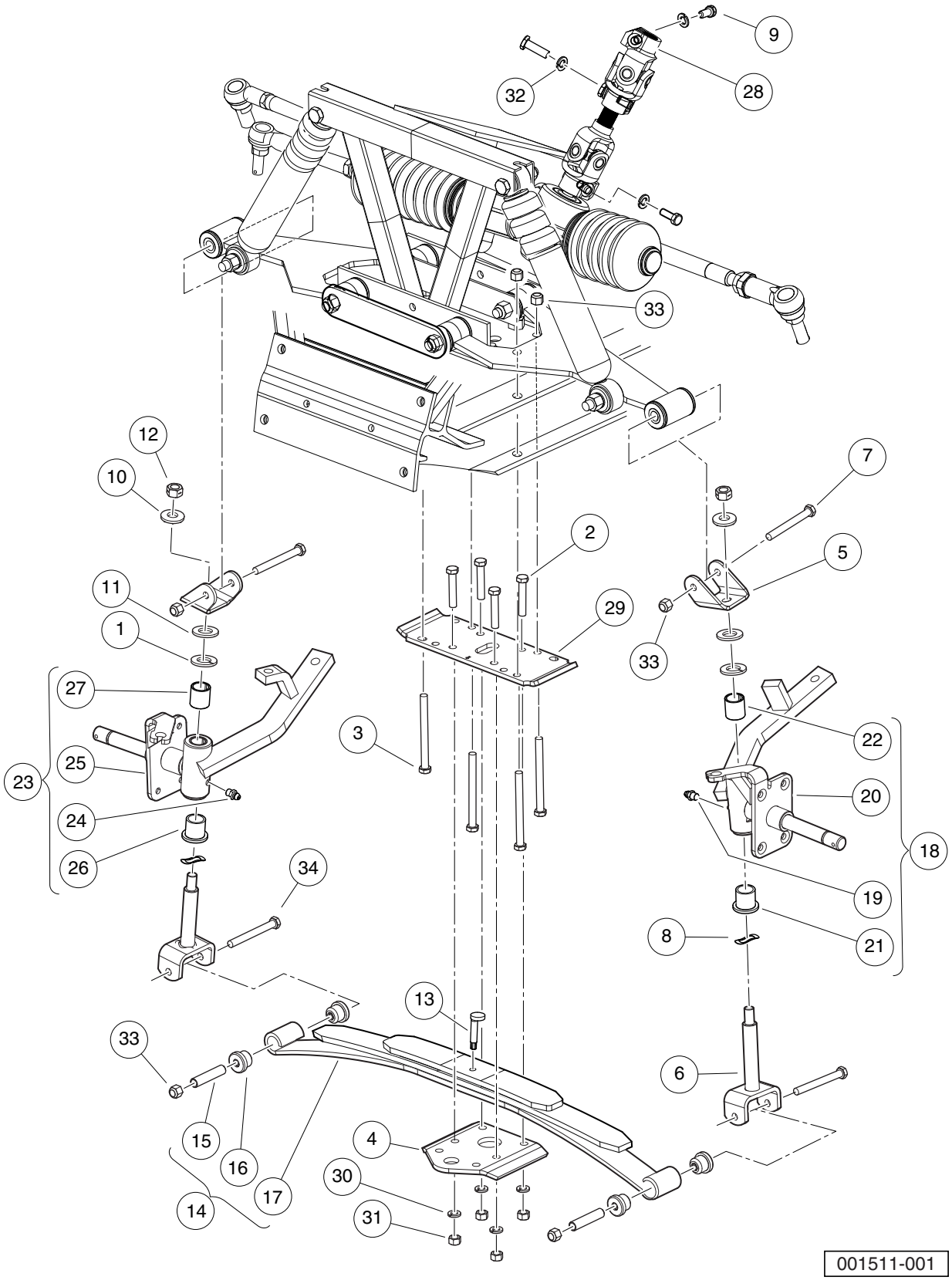
9
32
28
33
12
10
7
2
5
11
29
1
33
27
3
22
25
23
20
24
18
26
34
19
8
21
13
33
6
15
4
16
30
17
14
31
001511-001

FRONT SUSPENSION, LOWER, HD, 3 LEAF-1 PLATE

ITEM	PART NO.	DESCRIPTION	QTY
		1 2 3 4	
1	1010150	Bearing, Thrust	2
2	1010177	Bolt, 3/8-16 X 2.00 Hex Head	4
3	1010200	Bolt, 3/8-16 X 4.25 Hex Head	4
4	1014276	Plate, Front Spring Retainer	1
5	1016384	Clevis, Delta Upper	2
6	1016386	King Pin Assembly	2
7	1016387	Screw, 3/8-16 X 2.75 Hx Hd Cap	2
8	1016389	Washer, 1.125 Od Wave	2
9	1017226	Bolt, Hex-Head, 8mm X 1.25 - 30	3
10	102564002	Washer-1/2 Conical, Yellow	2
11	102684501	Washer, M12 Hard Regular	2
12	102766301	Nut, 1/2-20, Center Lock	2
13	103507001	Eccentric Bolt Common	1
14	103628901	Spring Asm, Front, 3 Leaf (includes items 15 through 17)	1
15	1012303	Bushing, Steel	2
16	1015583	Bushing, Urethane	4
17	103502801	Spring, Front, 3 Leaf	1
18	103717302	Asm, Spindle, Lh, 4wb, Sp (includes items 19 through 22)	1
19	1015597	Fitting, 1/4-28 Thread-Forming Grease	1
20	N/A	Subasm, Spindle, Lh, 4wb	1
21	7048	Bushing, Flanged Bronze	1
22	8067	Bushing, Bronze Spindle	1
23	103717402	Asm, Spindle, Rh, 4wb, Sp (includes items 24 through 27)	1
24	1015597	Fitting, 1/4-28 Thread-Forming Grease	1
25	N/A	Subasm, Spindle, Rh, 4wb	1
26	7048	Bushing, Flanged Bronze	1
27	8067	Bushing, Bronze Spindle	1
28	105074201	Shaft, Int, Steering, Sus Fwd	1
29	105083301	Plate, Spring Mount, Restyle	1
30	357	Lockwasher, 3/8 Split	4
31	706	Nut, Hex 3/8-16	5
32	7174	Lockwasher, 5/16 Split	3
33	8754	Locknut, 3/8-16 Hex	8
34	8755	Screw, 3/8-16 X 3.375 Hex Cap	2

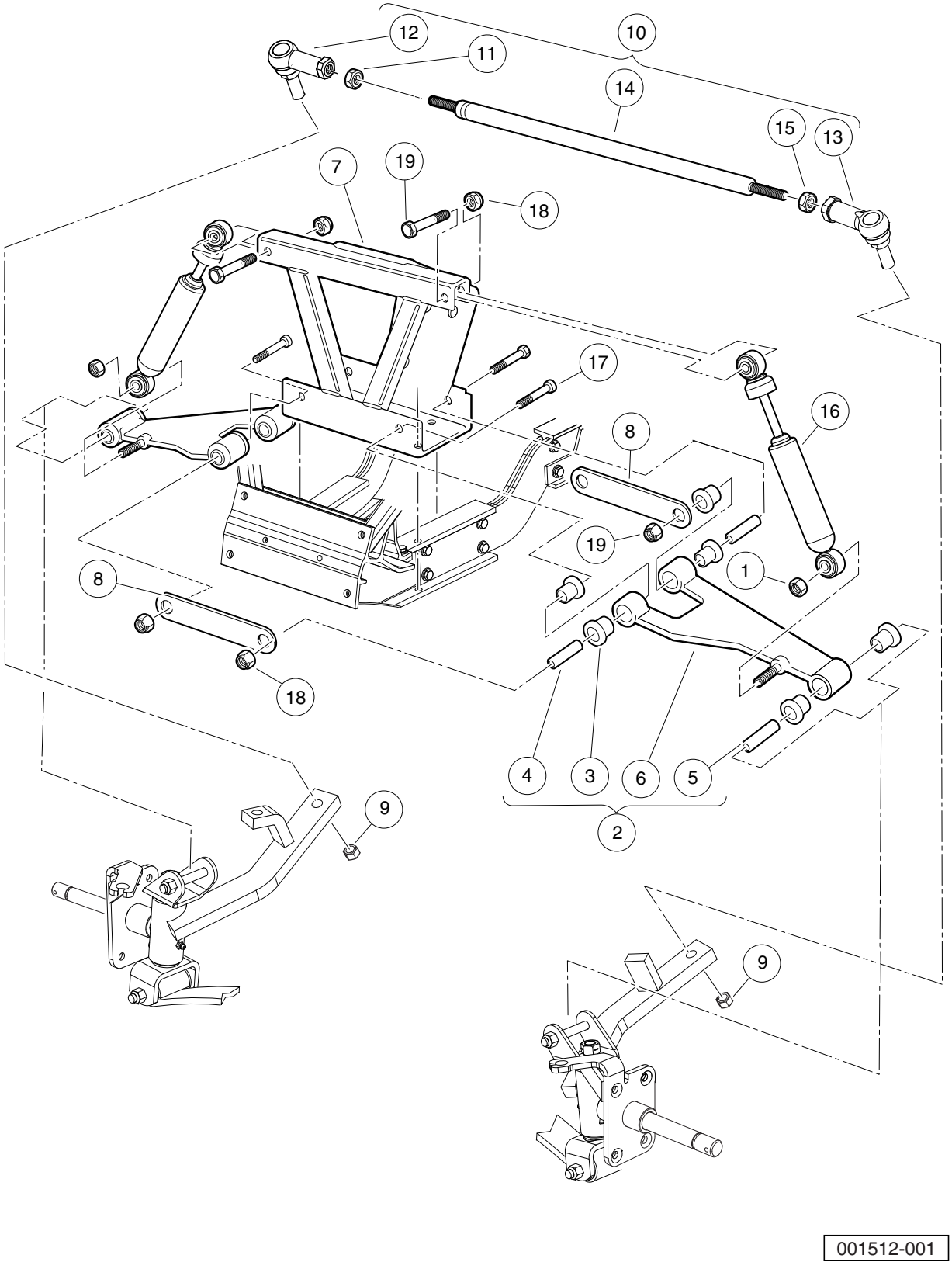
12
11
10
14
15
13
7
19
18
17
16
8
19
1
8
18
4
3
6
5
2
9
9
001512-001

FRONT SUSPENSION, UPPER, STD

ITEM	PART NO.	DESCRIPTION	QTY
		1 2 3 4	
1	1010138	Locknut, 3/8-16 Dimpled	2
2	1016353	Sub-Assembly, Delta A-Plate (includes items 3 through 6)	2
3	1016346	Bushing, Urethane	6
4	1016349	Sleeve, Delta Inner	2
5	1016350	Sleeve, Delta Outer	1
6	1016351	Delta A-Plate	1
7	101638502	Weldment, Shock & Gear, Ca	1
8	1017266	A-Plate Strap	2
9	102289201	Nut - Hex Locking, M12 X 1.25	2
10	103653601	Asm, Tie Rod (includes items 11 through 15)	1
11	1013042	Nut, 12mm Hex	1
12	102022601	End, Tie Rod M12 X 1.25 Rh	1
13	102022602	End, Tie Rod, M12 X 1.25, Lh	1
14	103354701	Rod, Tie, Male Thd	1
15	103653501	Nut, Jam, M12-1.25, Lh	1
16	105106601	Shock Absorber, Front, 1 Bumper	2
17	2402	Screw, 3/8-16 X 2.25 Hx Hd Cap	4
18	8754	Locknut, 3/8-16 Hex	6
19	8861	Bolt, 3/8-16 X 1.75 Hex	2

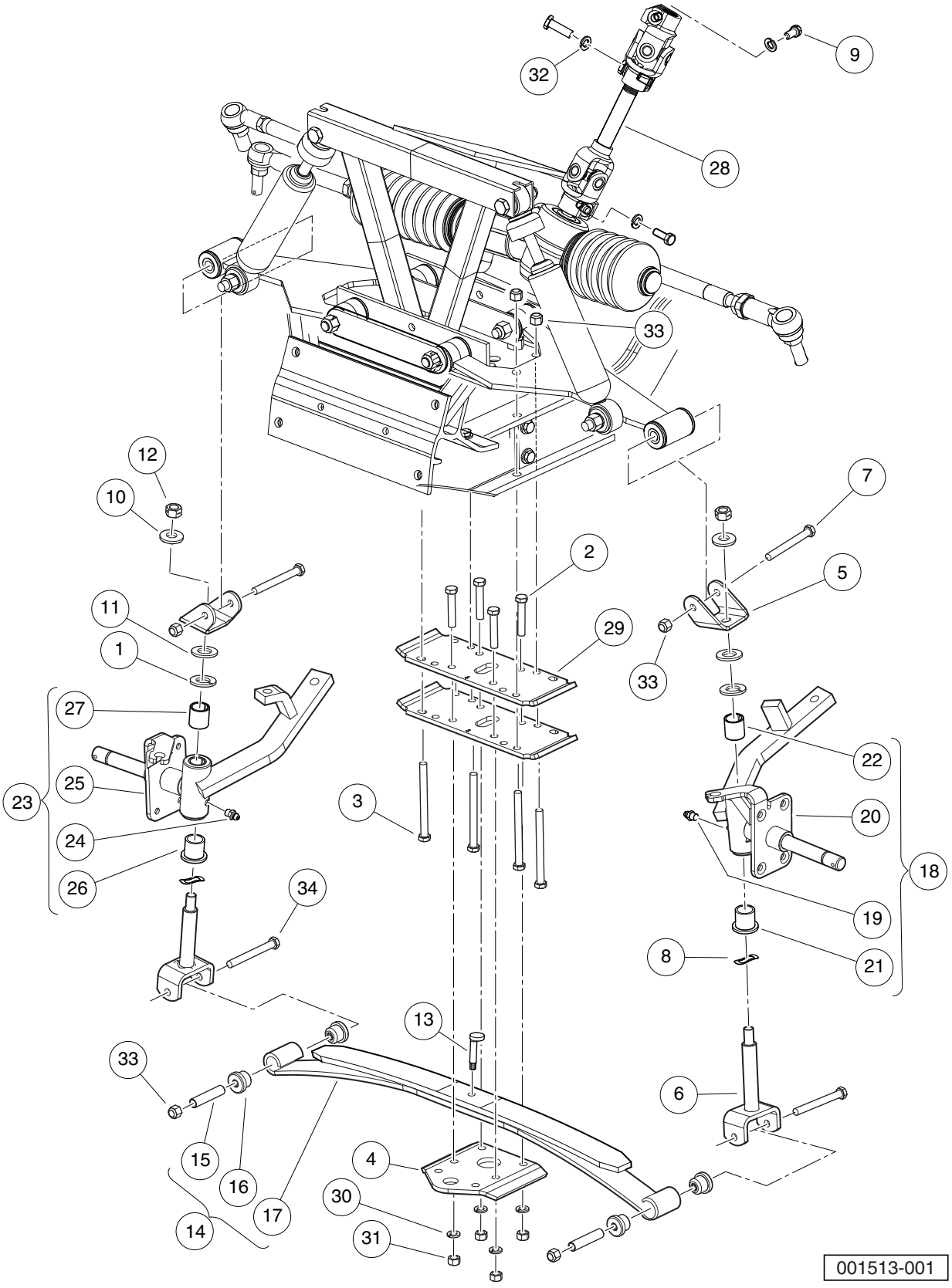
32
9
28
33
12
10
7
2
5
11
1
29
33
27
22
25
23
3
20
24
18
26
34
19
8
21
13
33
6
15
16
17
4
30
14
31
001513-001

FRONT SUSPENSION, LOWER, HD, 2 LEAF-2 PLATES

ITEM	PART NO.	DESCRIPTION	QTY
		1 2 3 4	
1	1010150	Bearing, Thrust	2
2	1010177	Bolt, 3/8-16 X 2.00 Hex Head	4
3	1010200	Bolt, 3/8-16 X 4.25 Hex Head	4
4	1014276	Plate, Front Spring Retainer	1
5	1016384	Clevis, Delta Upper	2
6	1016386	King Pin Assembly	2
7	1016387	Screw, 3/8-16 X 2.75 Hx Hd Cap	2
8	1016389	Washer, 1.125 Od Wave	2
9	1017226	Bolt, Hex-Head, 8mm X 1.25 - 30	3
10	102564002	Washer-1/2 Conical, Yellow	2
11	102684501	Washer, M12 Hard Regular	2
12	102766301	Nut, 1/2-20, Center Lock	2
13	103507001	Eccentric Bolt Common	1
14	103628801	Spring Asm, Front, 2 Leaf (includes items 15 through 17)	1
15	1012303	Bushing, Steel	2
16	1015583	Bushing, Urethane	4
17	103502701	Spring, Front, 2 Leaf	1
18	103717302	Asm, Spindle, Lh, 4wb, Sp (includes items 19 through 22)	1
19	1015597	Fitting, 1/4-28 Thread-Forming Grease	1
20	N/A	Subasm, Spindle, Lh, 4wb	1
21	7048	Bushing, Flanged Bronze	1
22	8067	Bushing, Bronze Spindle	1
23	103717402	Asm, Spindle, Rh, 4wb, Sp (includes items 24 through 27)	1
24	1015597	Fitting, 1/4-28 Thread-Forming Grease	1
25	N/A	Subasm, Spindle, Rh, 4wb	1
26	7048	Bushing, Flanged Bronze	1
27	8067	Bushing, Bronze Spindle	1
28	103867901	Joint, Steering, Lifted (includes items 29 and 30)	1
29	1017226	Bolt, Hex-Head, 8mm X 1.25 - 30	3
30	7174	Lockwasher, 5/16 Split	3
31	105083301	Plate, Spring Mount, Restyle	2
32	357	Lockwasher, 3/8 Split	4
33	706	Nut, Hex 3/8-16	5
34	7174	Lockwasher, 5/16 Split	3
35	8754	Locknut, 3/8-16 Hex	8
36	8755	Screw, 3/8-16 X 3.375 Hex Cap	2

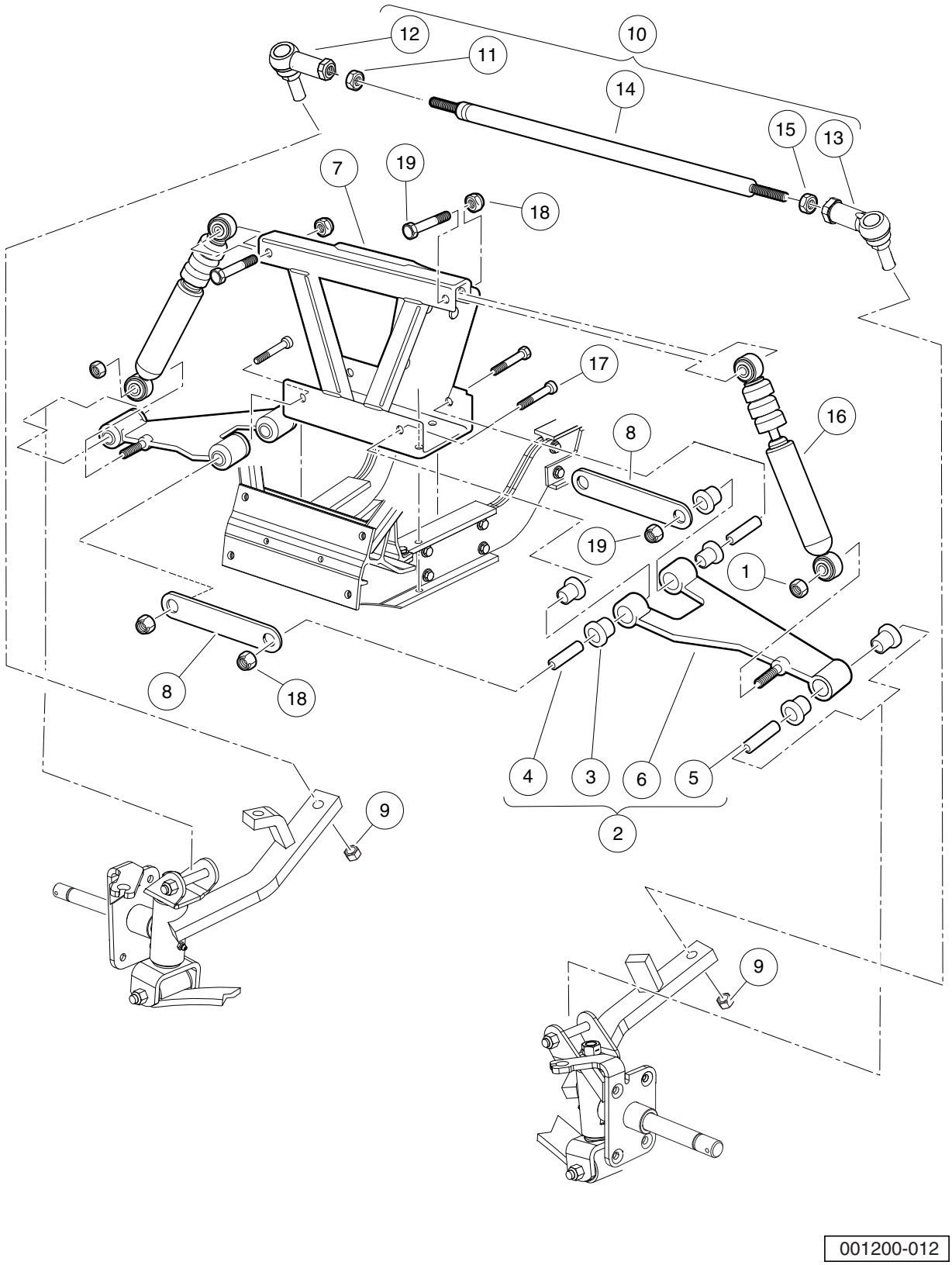
12
11
10
14
15
13
7
19
18
17
16
8
19
1
8
18
4
3
6
5
2
9
9
001200-012

FRONT SUSPENSION, UPPER, HD

ITEM	PART NO.	DESCRIPTION	QTY
		1 2 3 4	
1	1010138	Locknut, 3/8-16 Dimpled	2
2	1016353	Sub-Assembly, Delta A-Plate (includes items 3 through 6)	2
3	1016346	Bushing, Urethane	6
4	1016349	Sleeve, Delta Inner	2
5	1016350	Sleeve, Delta Outer	1
6	1016351	Delta A-Plate	1
7	101638502	Weldment, Shock & Gear, Ca	1
8	1017266	A-Plate Strap	2
9	102289201	Nut - Hex Locking, M12 X 1.25	2
10	103653601	Asm, Tie Rod (includes items 11 through 15)	1
11	1013042	Nut, 12mm Hex	1
12	102022601	End, Tie Rod M12 X 1.25 Rh	1
13	102022602	End, Tie Rod, M12 X 1.25, Lh	1
14	103354701	Rod, Tie, Male Thd	1
15	103653501	Nut, Jam, M12-1.25, Lh	1
16	105106702	Shock Absorb, Frnt, 3 Bump Ele	2
17	2402	Screw, 3/8-16 X 2.25 Hx Hd Cap	4
18	8754	Locknut, 3/8-16 Hex	6
19	8861	Bolt, 3/8-16 X 1.75 Hex	2

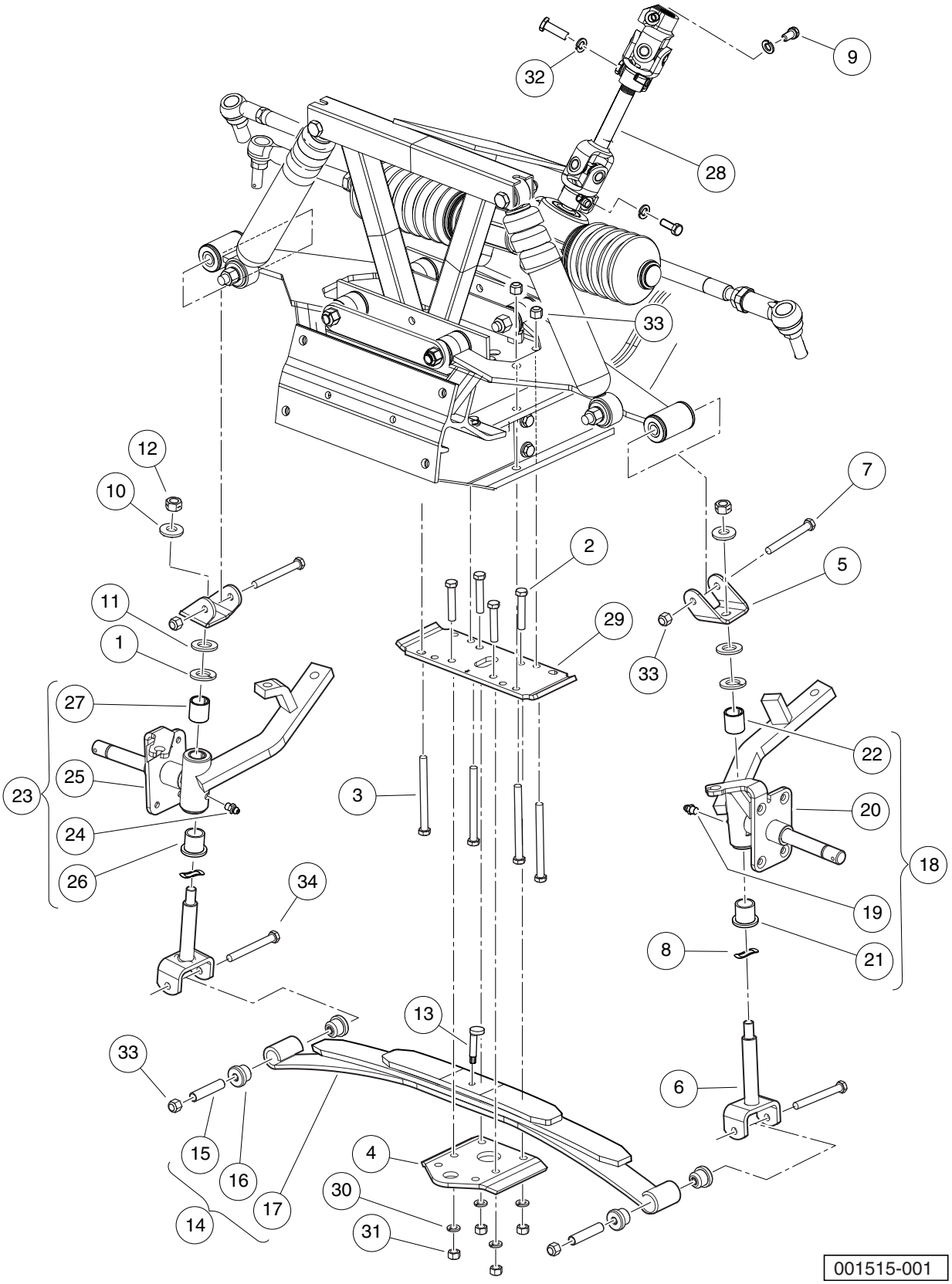
32
9
28
33
12
10
7
2
5
11
1
29
33
27
22
25
23
3
20
24
18
26
34
19
8
21
13
33
6
15
4
16
30
17
14
31
001515-001

FRONT SUSPENSION, LOWER, HD, 3 LEAF-1 PLATE

ITEM	PART NO.	DESCRIPTION	QTY
		1 2 3 4	
1	1010150	Bearing, Thrust	2
2	1010177	Bolt, 3/8-16 X 2.00 Hex Head	4
3	1010200	Bolt, 3/8-16 X 4.25 Hex Head	4
4	1014276	Plate, Front Spring Retainer	1
5	1016384	Clevis, Delta Upper	2
6	1016386	King Pin Assembly	2
7	1016387	Screw, 3/8-16 X 2.75 Hx Hd Cap	2
8	1016389	Washer, 1.125 Od Wave	2
9	1017226	Bolt, Hex-Head, 8mm X 1.25 - 30	3
10	102564002	Washer-1/2 Conical, Yellow	2
11	102684501	Washer, M12 Hard Regular	2
12	102766301	Nut, 1/2-20, Center Lock	2
13	103507001	Eccentric Bolt Common	1
14	103628901	Spring Asm, Front, 3 Leaf (includes items 15 through 17)	1
15	1012303	Bushing, Steel	2
16	1015583	Bushing, Urethane	4
17	103502801	Spring, Front, 3 Leaf	1
18	103717302	Asm, Spindle, Lh, 4wb, Sp (includes items 19 through 22)	1
19	1015597	Fitting, 1/4-28 Thread-Forming Grease	1
20	N/A	Subasm, Spindle, Lh, 4wb	1
21	7048	Bushing, Flanged Bronze	1
22	8067	Bushing, Bronze Spindle	1
23	103717402	Asm, Spindle, Rh, 4wb, Sp (includes items 24 through 27)	1
24	1015597	Fitting, 1/4-28 Thread-Forming Grease	1
25	N/A	Subasm, Spindle, Rh, 4wb	1
26	7048	Bushing, Flanged Bronze	1
27	8067	Bushing, Bronze Spindle	1
28	105074201	Shaft, Int, Steering, Sus Fwd	1
29	105083301	Plate, Spring Mount, Restyle	1
30	357	Lockwasher, 3/8 Split	4
31	706	Nut, Hex 3/8-16	5
32	7174	Lockwasher, 5/16 Split	3
33	8754	Locknut, 3/8-16 Hex	8
34	8755	Screw, 3/8-16 X 3.375 Hex Cap	2

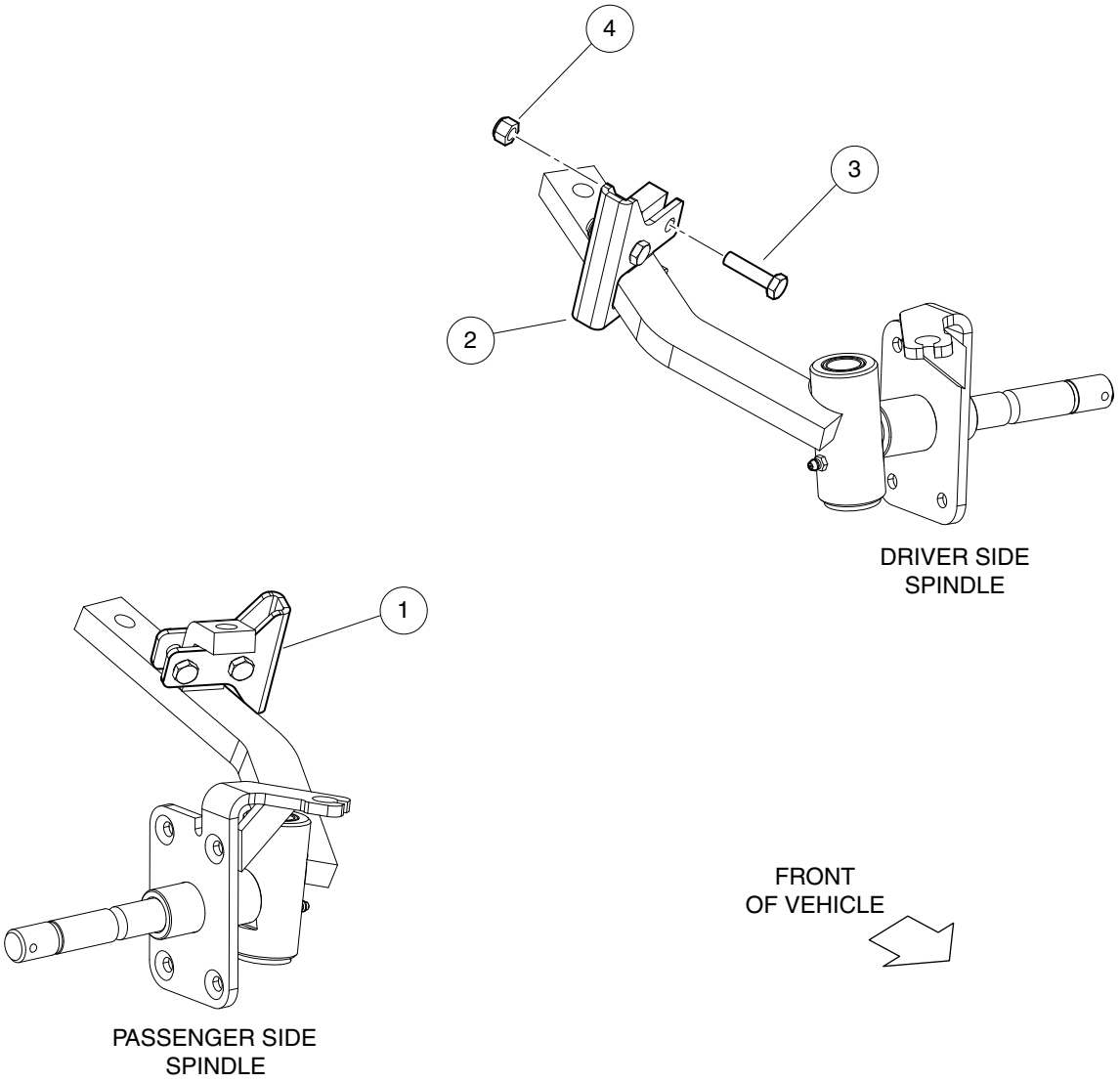
4
3
2
1
DRIVER SIDE
SPINDLE
PASSENGER SIDE
SPINDLE
FRONT
OF VEHICLE

001529-001

STEERING STOP

ITEM	PART NO.	DESCRIPTION	QTY
		1 2 3 4	
1	105242801	Brkt, Steering Stop, Pass, Ca	1
2	105243001	Brkt, Steering Stop, Drv, Ca	1
3	1218	Screw, 5/16-18 X 1.25 Hex-Head Cap	4
4	7473	Locknut, 5/16-18 Nylon Insert	4
		Note: Steering Stops 105242801 and 105243001 are required if vehicle is equipped with the 105100601, HD Bumper Kit.	

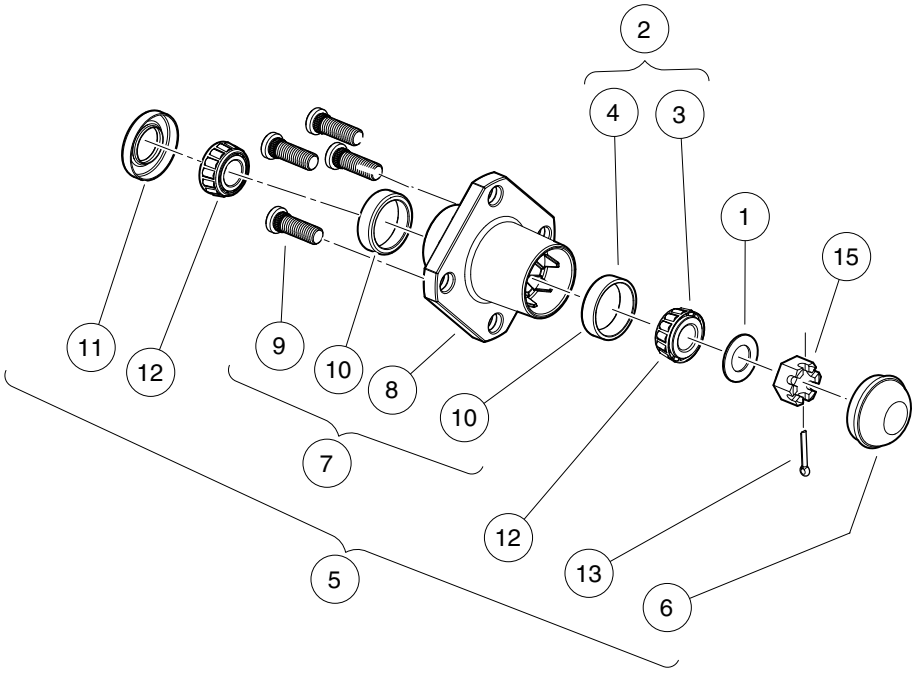

001520-002

FRONT WHEEL HUBS

ITEM	PART NO.	DESCRIPTION	QTY
		1 2 3 4	
1	1010005	Washer, 3/4 Flat	2
2	1011393	Hub Bearing Package (includes items 3 and 4)	4
3	7274	Bearing, Front Hub Wheel	1
4	7308	Race, Front Hub Bearing	1
5	1011892	Hub Assembly (includes items 6 through 13)	1
6	1011887	Dust Cover	1
7	N/A	Hub (includes items 8 through 10)	1
8	N/A	Front Hub	1
9	103477901	Lug Stud, 1/2-20 Unf, 4037	4
10	7308	Race, Front Hub Bearing	2
11	1013135	Seal, Double Lip	1
12	7274	Bearing, Front Hub Wheel	2
13	7910	Pin, 5/32 X 1.00 Cotter	1
14	1013135	Seal, Double Lip	2
15	7840	Nut, 3/4-16 Hex Slotted	2

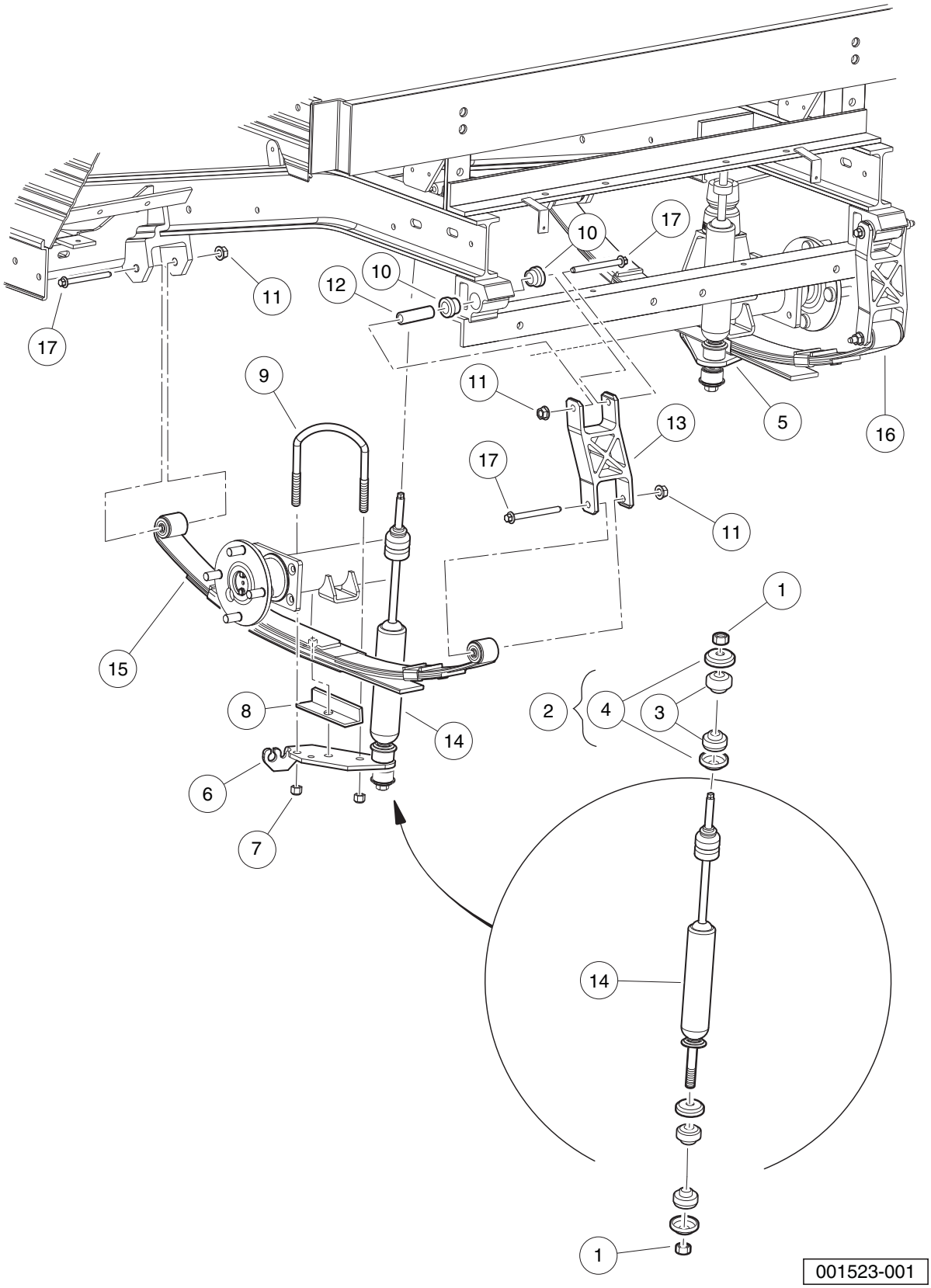
17
11
12
10
10
17
9
11
13
5
16
17
11
15
1
2
4
3
8
14
6
7
14
1
001523-001

REAR SUSPENSION COMPONENTS, STANDARD

ITEM	PART NO.	DESCRIPTION	QTY
		1 2 3 4	
1	1010145	Nut, 3/8-24 Hex	4
2	1011415	Kit, Shock Absorber Cushion (includes items 3 and 4)	4
3	N/A	Cushion, Shock Absorber	2
4	N/A	Retainer, Shock Absorber Cushion	2
5	1012181	Bracket, Shock Mounting, Right (Passenger)	1
6	1012182	Bracket, Shock Mounting, Left (Driver)	1
7	1014555	Locknut, 7/16-14 Nylon Hex	4
8	1014573	Spring Retainer	2
9	1014902	U-Bolt	2
10	101558302	Bushing, Urethane, Soft	4
11	102298401	Nut,m8,all Metal Lock	6
12	102506401	Sleeve - Spring Eye Mounts	2
13	105068902	Shackle, 6", Com, Machined	2
14	105106801	Shock Absorber,Rear, 2 Bumper	2
15	105186201	Asm, Spring 600lb Nr Std, Lh	1
16	105186202	Asm, Spring 600lb Nr Std, Rh	1
17	105188185	Bolt, M8x85mm,10.9 Grade	6

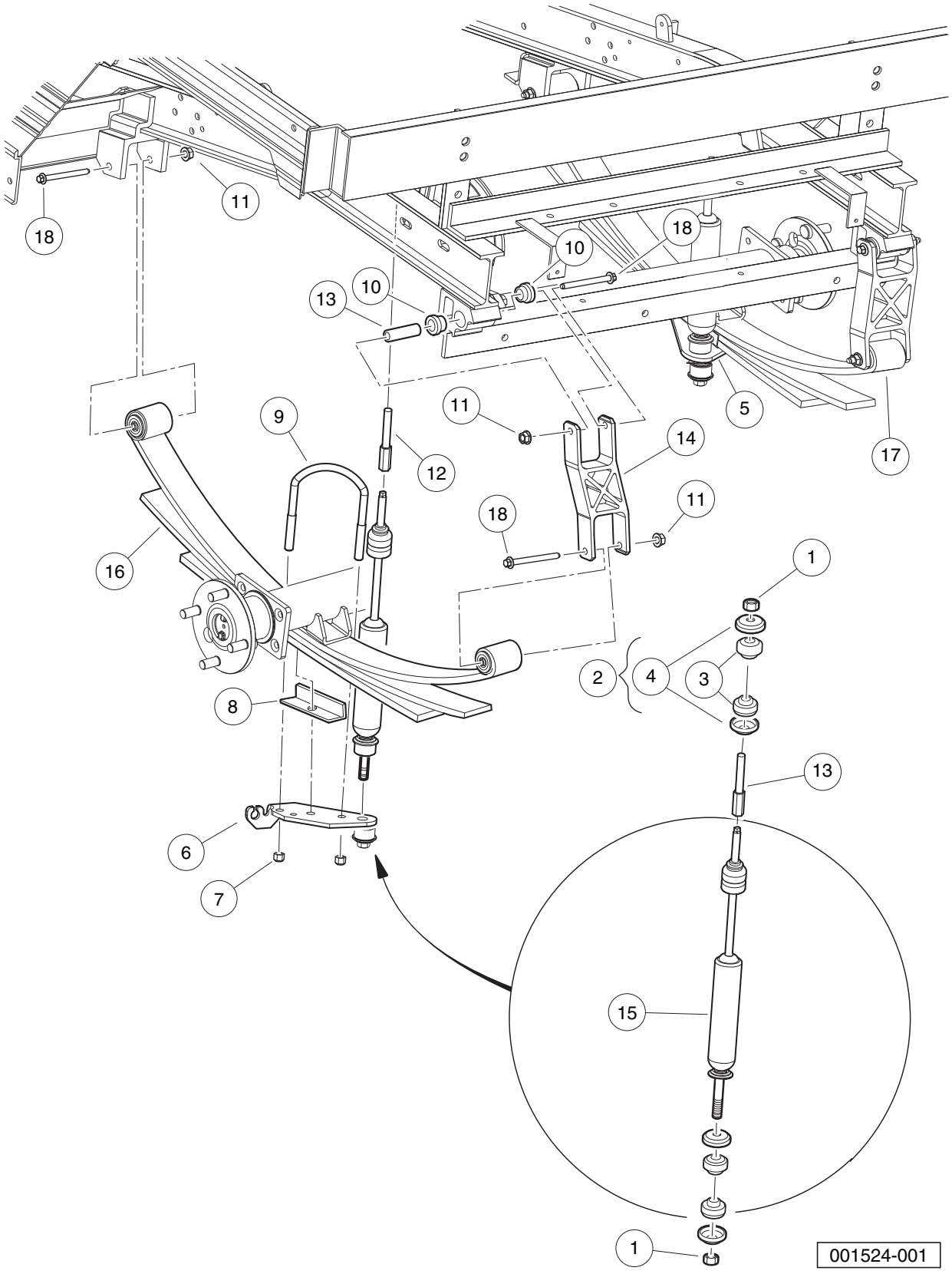
18
11
10
18
13
10
5
17
9
11
14
12
18
11
16
1
2
4
3
8
13
6
7
15
1
001524-001

REAR SUSPENSION COMPONENTS (LIFTED)

ITEM	PART NO.	DESCRIPTION	QTY
		1 2 3 4	
1	1010145	Nut, 3/8-24 Hex	4
2	1011415	Kit, Shock Absorber Cushion (includes items 3 and 4)	4
3	N/A	Cushion, Shock Absorber	2
4	N/A	Retainer, Shock Absorber Cushion	2
5	1012181	Bracket, Shock Mounting, Right (Passenger)	1
6	1012182	Bracket, Shock Mounting, Left (Driver)	1
7	1014555	Locknut, 7/16-14 Nylon Hex	4
8	1014573	Spring Retainer	2
9	1014902	U-Bolt	2
10	101558302	Bushing, Urethane, Soft	4
11	102298401	Nut,m8,all Metal Lock	6
12	102399001	Shock Extension	2
13	102506401	Sleeve - Spring Eye Mounts	2
14	105068902	Shackle, 6", Com, Machined	2
15	105106801	Shock Absorber,Rear, 2 Bumper	2
16	105186301	Asm, Spring 600lb Nr Lifted Lh	1
17	105186302	Asm, Spring 600lb Nr Lifted Rh	1
18	105188185	Bolt, M8x85mm,10.9 Grade	6

6

G

E

ELECTRICAL SYSTEM – GASOLINE EFI

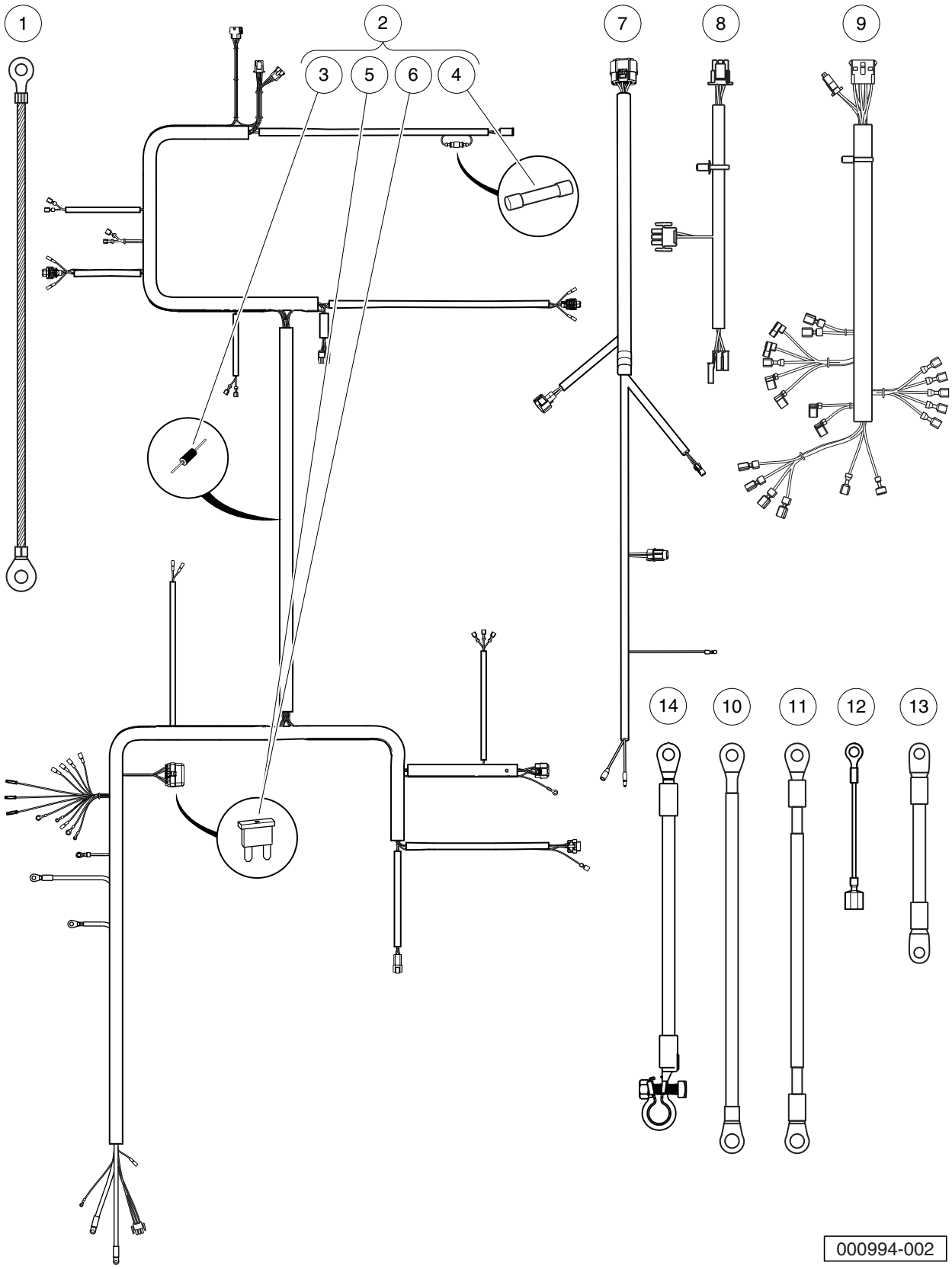
1
2
3
5
6
4
7
8
9
14
10
11
12
13
000994-002

WIRING, FUSES, AND DIODES, PEDAL-START – EFI

ITEM	PART NO.	DESCRIPTION	QTY
		1 2 3 4	
1	1015332	Wire, Ground, #10, Uninsulated	1
2	105007701	Harness, Wire, Main, CA500/550, Pedal-Start Gas (includes items 3 through 6)	1
3	1014789	Diode, General Purpose, 3.0-Amp	2
4	103924801	Fuse, Glass, 2-Amp	1
5	105081501	Fuse, ATM, 5-Amp	1
6	105081601	Fuse, ATM, 10-Amp	1
7	105008101	Harness, Wire, ECU/Engine	1
8	105093301	Harness, Wire, FNR Connector, CA300-700	1
9	105095101	Harness, Wire, Instr. Panel, Gas, CA300-700	1
10	105135901	Wire, Battery (side-post), B-, Gas	1
11	105136001	Wire, Battery (side-post), B+, Gas	1
12	105143301	Wire, Ground, Fuel Tank	1
13	105161701	Wire, 4-Ga, Green, Starter/Generator	1
14	105256801	Wire Assy, 4ga, Battery, (top-post) B+, Gas	1
		Note: For ECU, see Throttle Body in Fuel System section.	

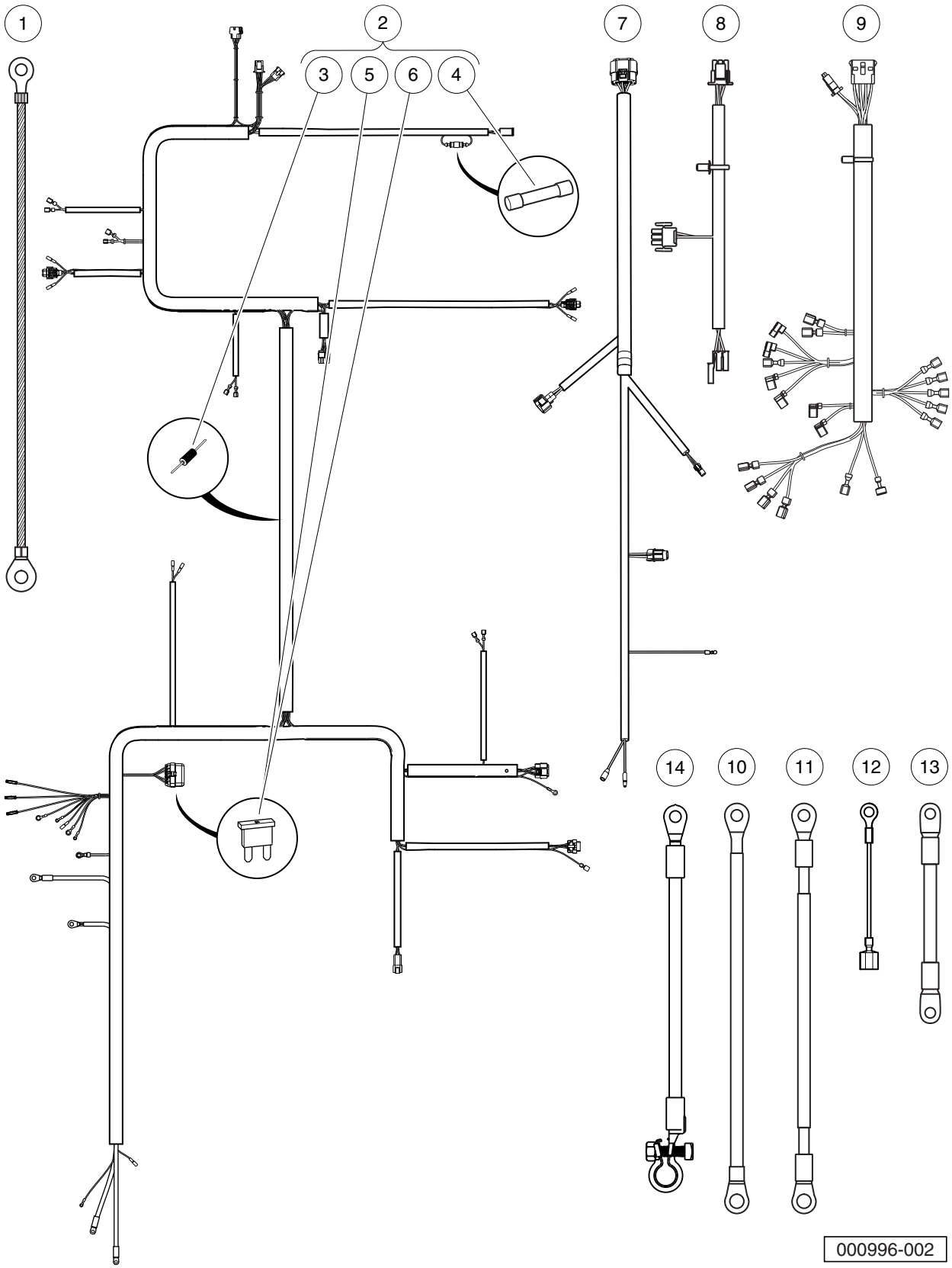
1
2
3
5
6
4
7
8
9
14
10
11
12
13
000996-002

WIRING, FUSES, AND DIODES, KEY-START – EFI

ITEM	PART NO.	DESCRIPTION	QTY
		1 2 3 4	
1	1015332	Wire, Ground, #10, Uninsulated	1
2	105008001	Harness, Wire, Main, CA500/550, Key-Start Gas (includes items 3 through 6)	1
3	1014789	Diode, General Purpose, 3.0-Amp	2
4	103924801	Fuse, Glass, 2-Amp	1
5	105081501	Fuse, ATM, 5-Amp	1
6	105081601	Fuse, ATM, 10-Amp	1
7	105008101	Harness, Wire, ECU/Engine	1
8	105093301	Harness, Wire, FNR Connector, CA300-700	1
9	105095101	Harness, Wire, Instr. Panel, Gas, CA300-700	1
10	105135901	Wire, Battery (side-post), B-, Gas	1
11	105136001	Wire, Battery (side-post), B+, Gas	1
12	105143301	Wire, Ground, Fuel Tank	1
13	105161701	Wire, 4-Ga, Green, Starter/Generator	1
14	105256801	Wire Assy, 4ga, Battery, (top-post) B+, Gas	1
		Note: For ECU, see Throttle Body in Fuel System section.	

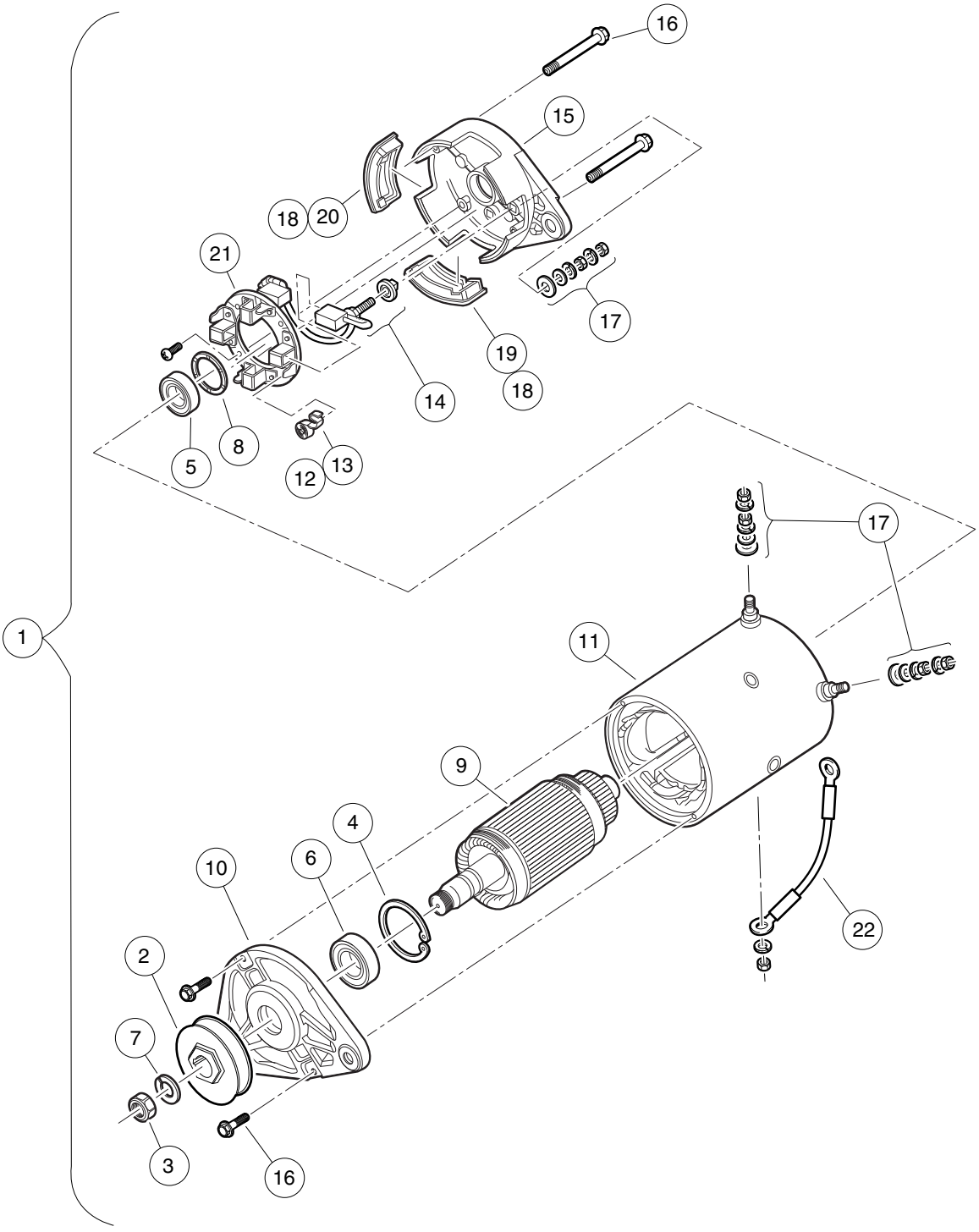
1
2
3
4
5
6
7
8
9
10
11
12
13
14
15
16
17
18
19
20
21
22
001016-001

STARTER/GENERATOR (MODEL 114-04-4006), KEY-START – EFI

ITEM	PART NO.	DESCRIPTION	QTY
		1 2 3 4	
1	105190102	Starter/Generator, Bi-Rotational, Utility, Key-Start (includes items 2 through 22)	1
2	1014289	Pulley, Starter/Generator	1
3	102838701	Nut, Hex, M14x2, S/G	1
4	102838801	Retainer, Front, S/G	1
5	102838901	Bearing, Ball, Front, S-g	1
6	102839001	Bearing, Ball, Front, S-g	1
7	102839301	Washer, Lock M14x2, S-g	1
8	102841101	Washer, Wave, S-g	1
9	N/A	Asm, Armature, Starter/Generator	1
10	102844601	Head, Drive End, S-g	1
11	102844701	Asm, Frame and Field, Starter/Generator	1
12	103347101	Kit, Spring Brush, Starter/Generator (includes item 13)	1
13	N/A	Spring, Brush, S-g	4
14	103347301	Set, Brush Term, S-g	1
15	103347601	Head, Comm End, S-g	1
16	103347701	Set, Fastener, Ceh Deh, S-g	1
17	103347801	Set, Term Hardware, S/G	1
18	103347901	Kit, Cover, Brush Insp, Starter/Generator (includes items 19 and 20)	1
19	N/A	Plug, Rubber Drain, Start/Generator	3
20	N/A	Cover, Inspection, S-g	1
21	103953301	Kit, Brush And Brush Holder	1
22	105161701	Wire, 4-Ga, Green, Starter/Generator	1

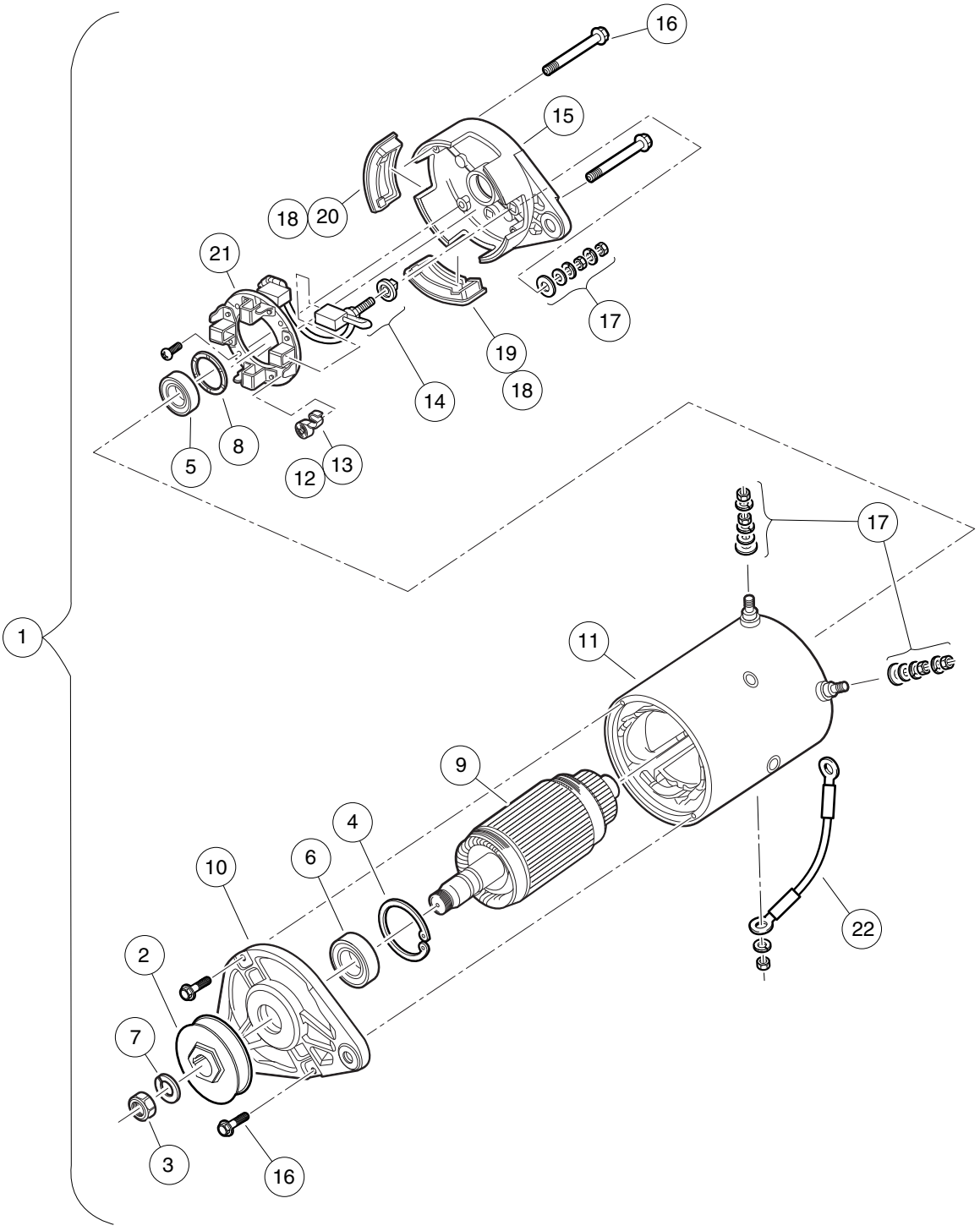
1
2
3
4
5
6
7
8
9
10
11
12
13
14
15
16
17
18
19
20
21
22
001016-001

STARTER/GENERATOR (MODEL 114-05-4001) , PEDAL-START – EFI

ITEM	PART NO.	DESCRIPTION	QTY
		1 2 3 4	
1	105190101	Starter/Generator, High-Torque, Utility, Pedal-Start (includes items 2 through 22)	1
2	1014289	Pulley, Starter/Generator	1
3	102838701	Nut, Hex, M14x2, S/G	1
4	102838801	Retainer, Front, S/G	1
5	102838901	Bearing, Ball, Front, S-g	1
6	102839001	Bearing, Ball, Front, S-g	1
7	102839301	Washer, Lock M14x2, S-g	1
8	102841101	Washer, Wave, S-g	1
9	N/A	Asm, Armature, Starter/Generator	1
10	102844601	Head, Drive End, S-g	1
11	102844701	Asm, Frame and Field, Starter/Generator	1
12	103347101	Kit, Spring Brush, Starter/Generator (includes item 13)	1
13	N/A	Spring, Brush, S-g	4
14	103347301	Set, Brush Term, S-g	1
15	103347601	Head, Comm End, S-g	1
16	103347701	Set, Fastener, Ceh Deh, S-g	1
17	103347801	Set, Term Hardware, S/G	1
18	103347901	Kit, Cover, Brush Insp, Starter/Generator (includes items 19 and 20)	1
19	N/A	Plug, Rubber Drain, Start/Generator	3
20	N/A	Cover, Inspection, S-g	1
21	103953301	Kit, Brush And Brush Holder	1
22	105161701	Wire, 4-Ga, Green, Starter/Generator	1

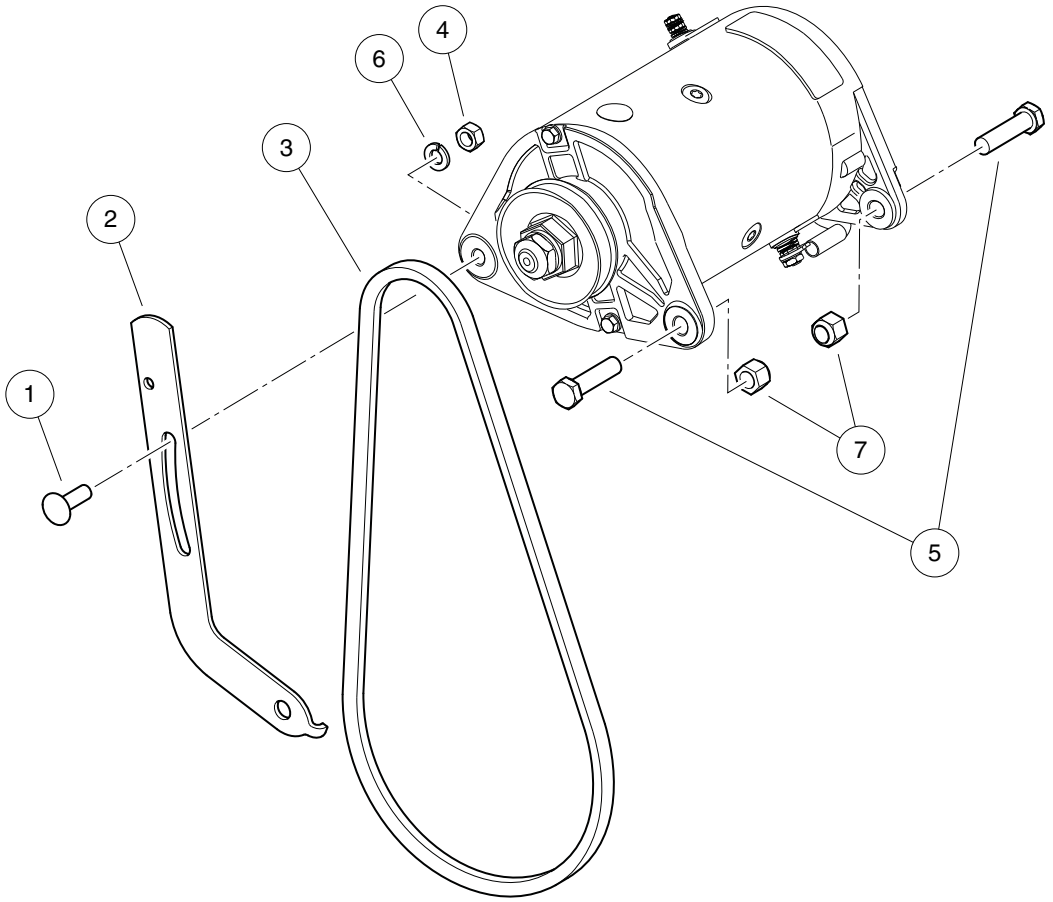

001009-001

STARTER/GENERATOR MOUNTING, EX40 – TO EARLY-2016 MODEL YEAR

ITEM	PART NO.	DESCRIPTION	QTY
		1 2 3 4	
1	1015932	Bolt, Carriage, 5/16-18	1
2	104005301	Bracket, Adjustable, Starter/Generator, EX40	1
3	105205401	Belt, Sg, 871, Ex40	1
4	1242	Nut, 5/16-18 Hex	1
5	1624	Screw, 3/8-16 X 1.50, Hex-Head Cap	2
6	7174	Lockwasher, 5/16 Split	1
7	8754	Locknut, 3/8-16 Hex	2

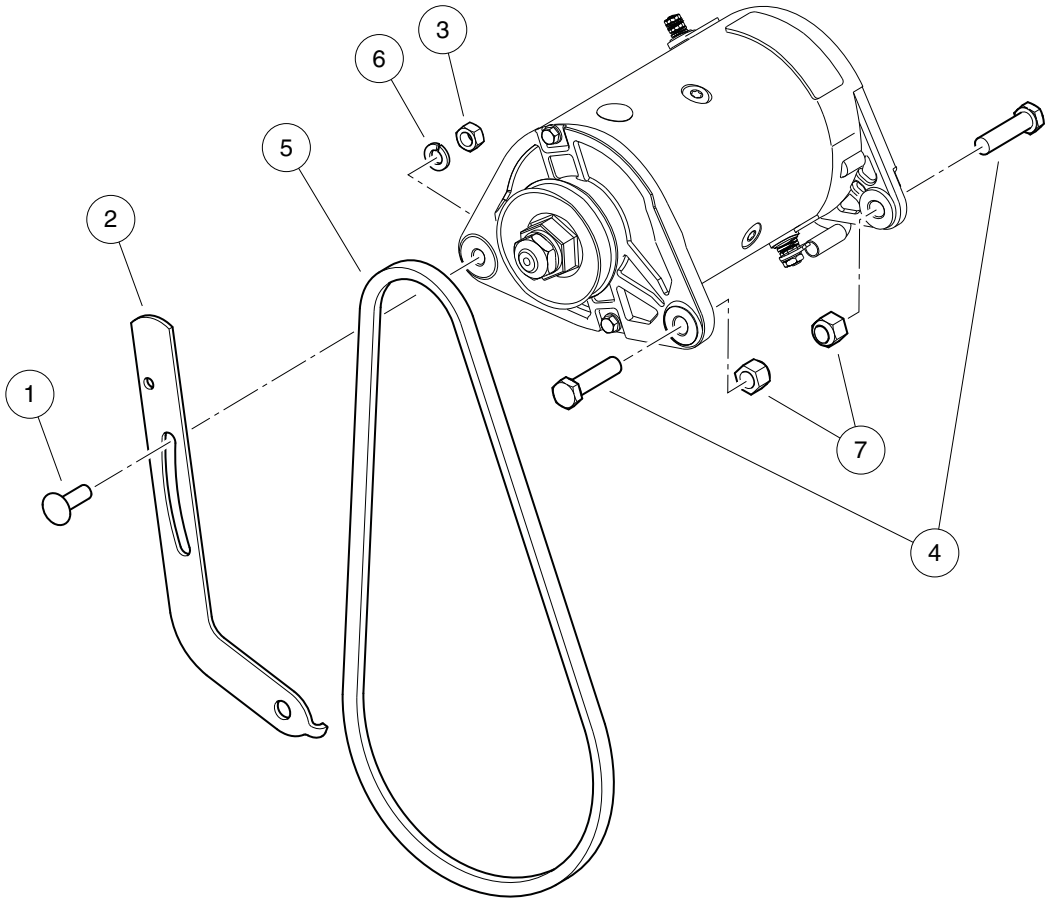

001009-002

STARTER/GENERATOR MOUNTING, EX40 – FROM EARLY-2016 MODEL YEAR

ITEM	PART NO.	DESCRIPTION	QTY
		1 2 3 4	
1	1015932	Bolt, Carriage, 5/16-18	1
2	104005301	Bracket, Adjustable, Starter/Generator, EX40	1
3	1242	Nut, 5/16-18 Hex	1
4	1624	Screw, 3/8-16 X 1.50, Hex-Head Cap	2
5	47539338001	Belt, Sg, Ex40, #5a	1
6	7174	Lockwasher, 5/16 Split	1
7	8754	Locknut, 3/8-16 Hex	2

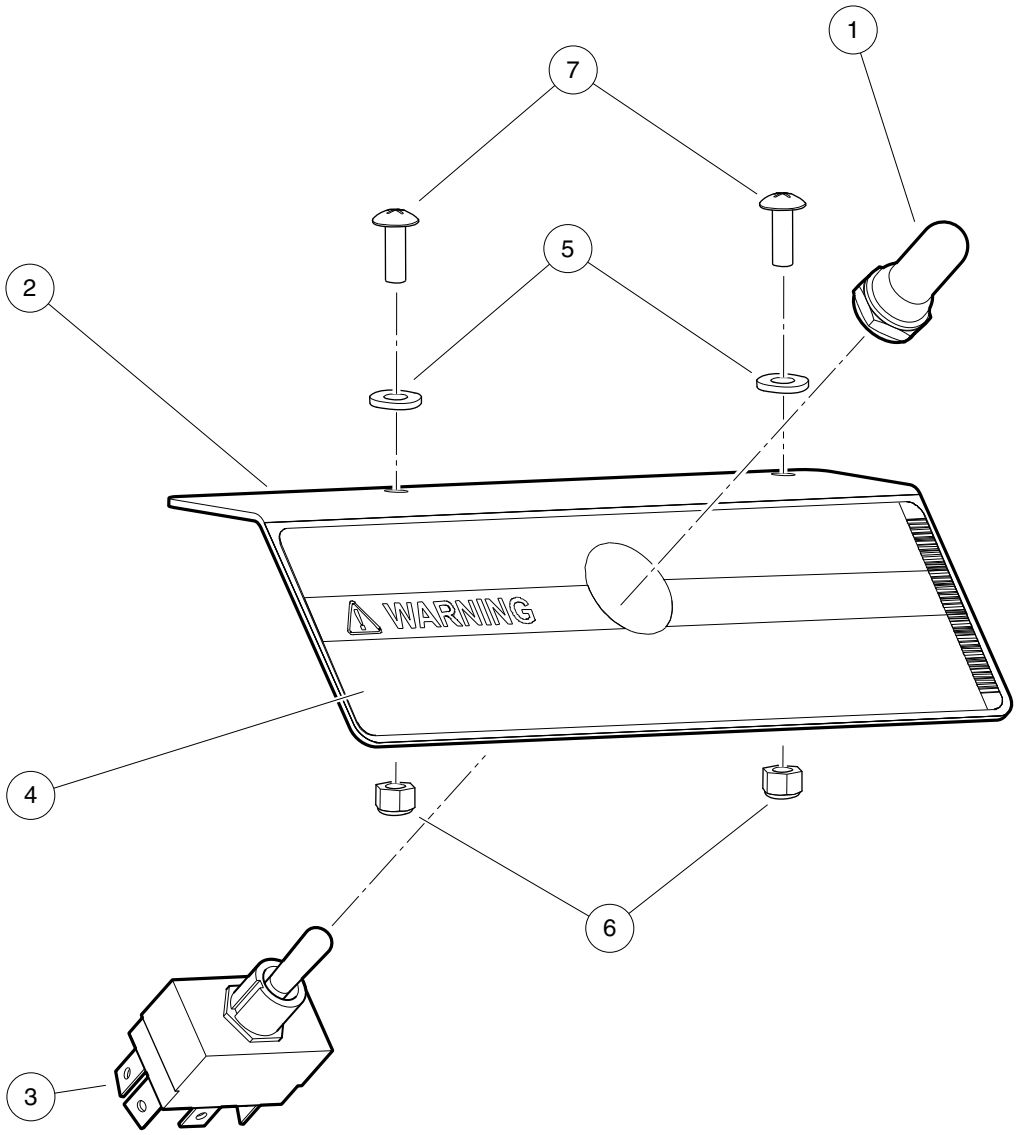

000755-003

OPERATION AND MAINTENANCE SWITCH

ITEM	PART NO.	DESCRIPTION	QTY
		1 2 3 4	
1	101908401	Boot, Switch	1
2	101922501	Bracket, Tow/Run Switch Mounting	1
3	103198401	Switch, Toggle, SPDT	1
4	103205501	Decal, Run/Service Switch	1
5	332	Washer, 1/4 Type A Narrow Flat	2
6	8233	Locknut, 1/4-20, Nylon Insert	2
7	8248	Screw, 1/4-20 X 0.75, Truss-Head Machine	2

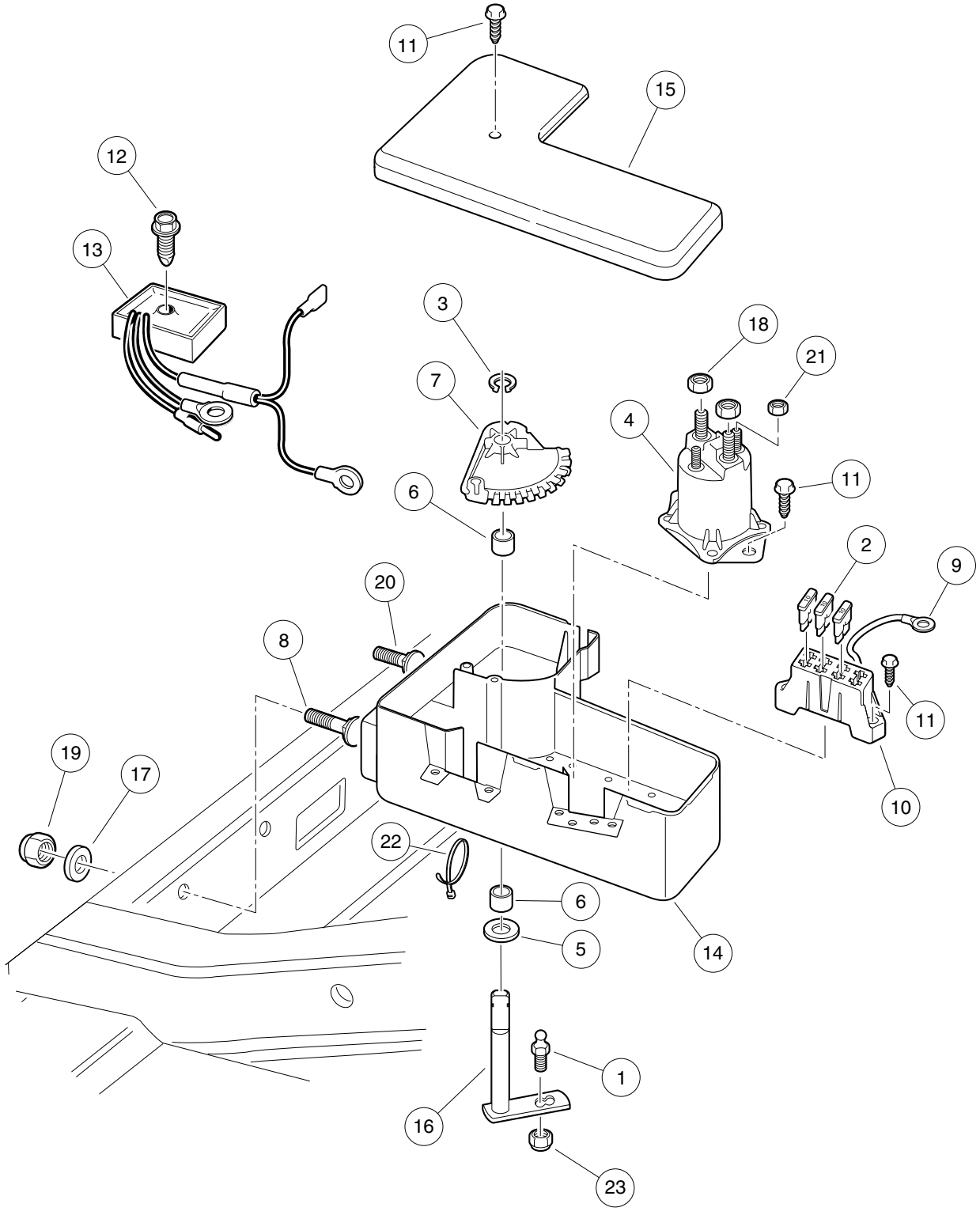
11
15
12
13
3
7
18
21
4
11
6
2
9
20
8
11
19
17
10
22
6
5
14
1
16
23
001014-002

ELECTRICAL COMPONENT BOX, KEY-START – EX40

ITEM	PART NO.	DESCRIPTION	QTY
		1 2 3 4	
1	1010954	Stud, Ball, 1/4-28 X 0.560	1
2	1012295	Fuse, 10-Amp	3
3	1013589	Ring, Retaining, 0.338" Internal	1
4	1013609	Solenoid, 12-Volt	1
5	1014065	Washer, Flat, 0.38" ID, Delrin	1
6	1014145	Bushing, Secondary Weight, Split	2
7	1015373	Cam, Electric Box	1
8	1015405	Bolt, Carriage, 5/16-18 X 2.0	1
9	1015737	Wire Assy, #10 Red	1
10	1015741	Fuse Block	1
11	1015752	Screw, #12-16 X 0.625, Hi-Lo	5
12	101856102	Screw, 1/4-15 X 1.50, Hi-lo, Hex	1
13	102711201	Voltage Regulator	1
14	105000301	Box, Component, Electrical	1
15	105000401	Cover, Box, Component, Elec	1
16	105037401	Weldment, Bellcrank, Comp Box	1
17	1241	Washer, 5/16 Type A Flat	2
18	1242	Nut, 5/16-18 Hex	2
19	7473	Locknut, 5/16-18 Nylon Insert	2
20	7818	Bolt, Carriage, 5/16-18 X 1.5	1
21	7893	Nut, #10-32 Hex	2
22	8639	Tie Wrap, 11" Nylon	6
23	8717	Locknut, Nylon Insert, 1/4-28	1

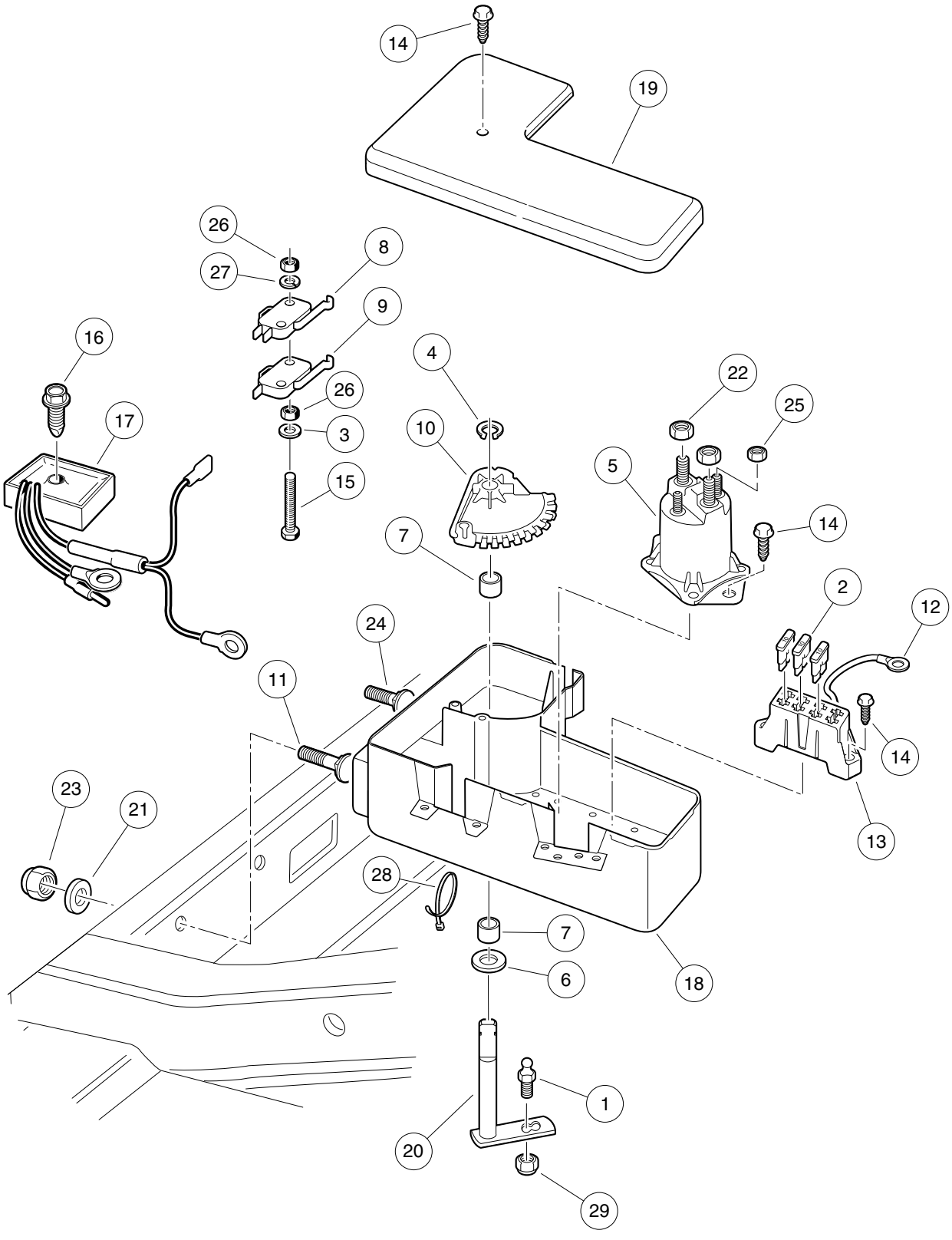
14
19
26
27
8
9
16
17
26
3
15
4
10
22
25
5
14
7
2
12
24
11
14
23
21
13
28
7
6
18
1
20
29
001014-001

ELECTRICAL COMPONENT BOX, PEDAL-START – EX40

ITEM	PART NO.	DESCRIPTION	QTY
		1 2 3 4	
1	1010954	Stud, Ball, 1/4-28 X 0.560	1
2	1012295	Fuse, 10-Amp	3
3	1012431	Washer, #4 Flat	2
4	1013589	Ring, Retaining, 0.338" Internal	1
5	1013609	Solenoid, 12-Volt	1
6	1014065	Washer, Flat, 0.38" ID, Delrin	1
7	1014145	Bushing, Secondary Weight, Split	2
8	1014807	Switch, Limit	1
9	1014808	Switch, Limit	1
10	1015373	Cam, Electric Box	1
11	1015405	Bolt, Carriage, 5/16-18 X 2.0	1
12	1015737	Wire Assy, #10 Red	1
13	1015741	Fuse Block	1
14	1015752	Screw, #12-16 X 0.625, Hi-Lo	5
15	1015878	Screw, #4-40 Hex Head Machine	2
16	101856102	Screw, 1/4-15 X 1.50, Hi-lo, Hex	1
17	102711201	Voltage Regulator	1
18	105000301	Box, Component, Electrical	1
19	105000401	Cover, Box, Component, Elec	1
20	105037401	Weldment, Bellcrank, Comp Box	1
21	1241	Washer, 5/16 Type A Flat	2
22	1242	Nut, 5/16-18 Hex	2
23	7473	Locknut, 5/16-18 Nylon Insert	2
24	7818	Bolt, Carriage, 5/16-18 X 1.5	1
25	7893	Nut, #10-32 Hex	2
26	8057	Nut, #4-40 Hex Machine	4
27	8058	Lockwasher, #4 Split	2
28	8639	Tie Wrap, 11" Nylon	6
29	8717	Locknut, Nylon Insert, 1/4-28	1

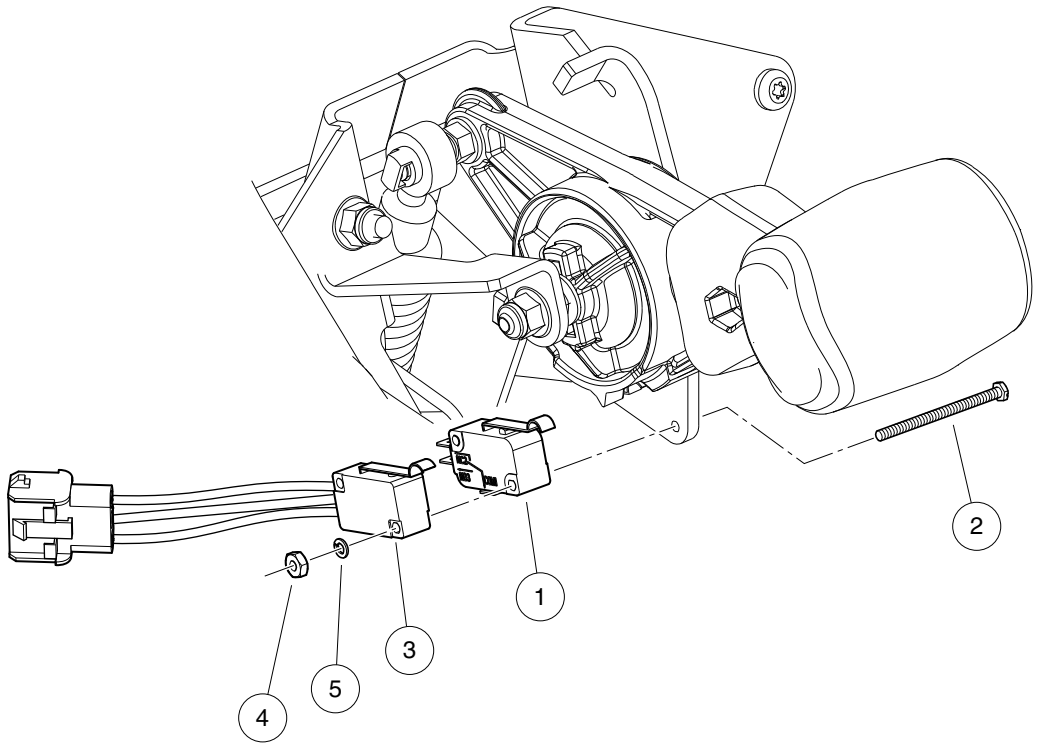

000999-002

FORWARD/REVERSE SHIFTER SWITCHES, KEY-START – EFI

ITEM	PART NO.	DESCRIPTION	QTY
		1 2 3 4	
1	1014807	Switch, Limit	1
2	1015878	Screw, #4-40 Hex Head Machine	2
3	105102601	Switch, Limit, Sealed, with 3-Wire Lead	1
4	8057	Nut, #4-40 Hex Machine	2
5	8058	Lockwasher, #4 Split	2

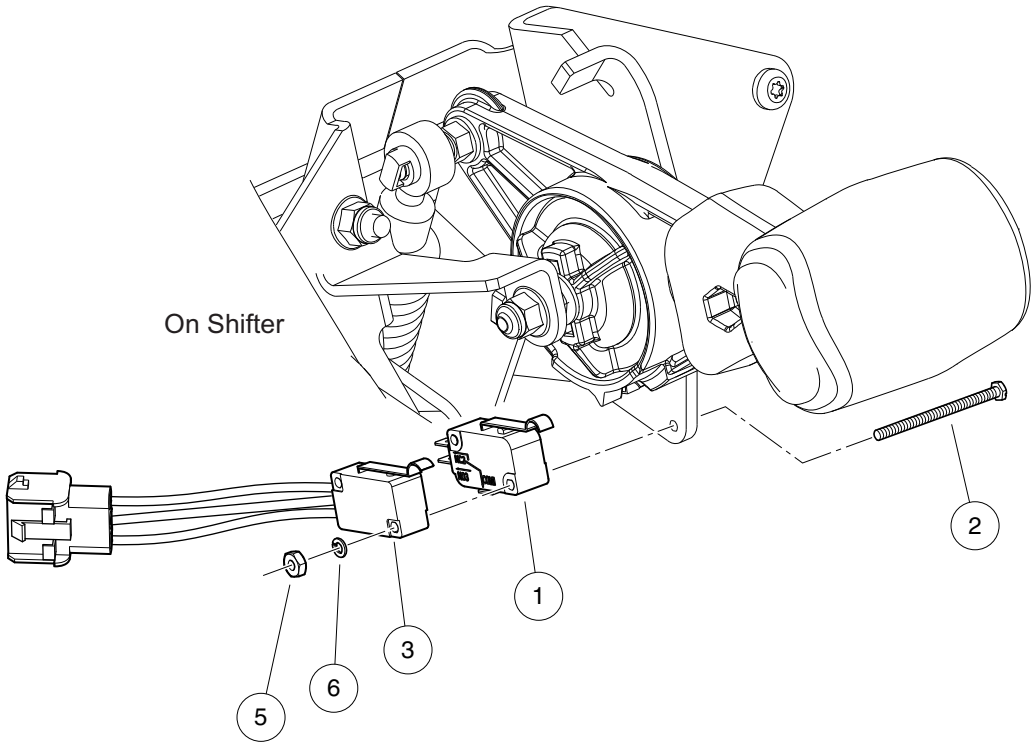

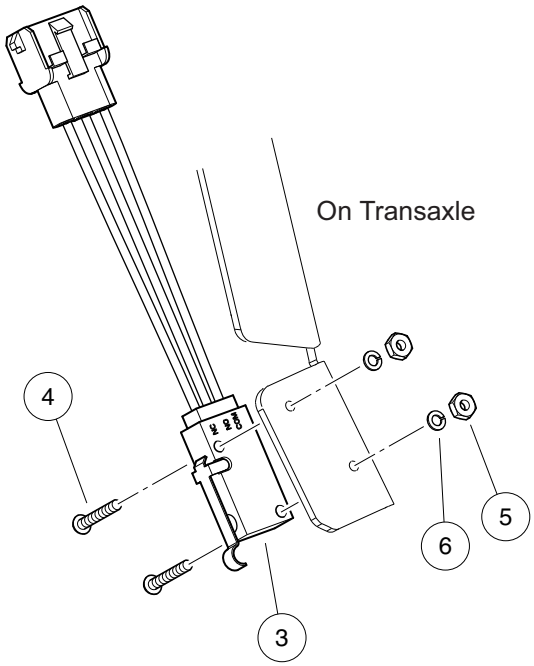

000999-001

FORWARD/REVERSE SHIFTER SWITCHES, PEDAL-START – EFI

ITEM	PART NO.	DESCRIPTION	QTY
		1 2 3 4	
1	1014807	Switch, Limit	1
2	1015878	Screw, #4-40 Hex Head Machine	2
3	105102601	Switch, Limit, Sealed, with 3-Wire Lead	2
4	8056	Screw, #4-40 X 0.75 Round-Head Machine	2
5	8057	Nut, #4-40 Hex Machine	4
6	8058	Lockwasher, #4 Split	4

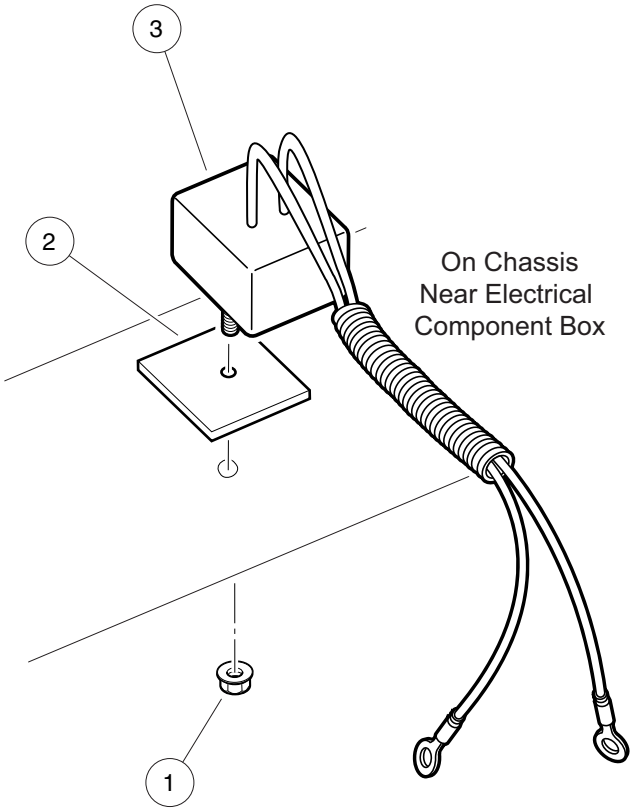

001015-001

CHARGING DIODE, KEY-START – EFI

ITEM	PART NO.	DESCRIPTION	QTY
		1 2 3 4	
1	101963401	Locknut, 5/16-18 Hex Flange	1
2	102269701	Thermal Pad	1
3	105037201	Diode, Charging	1

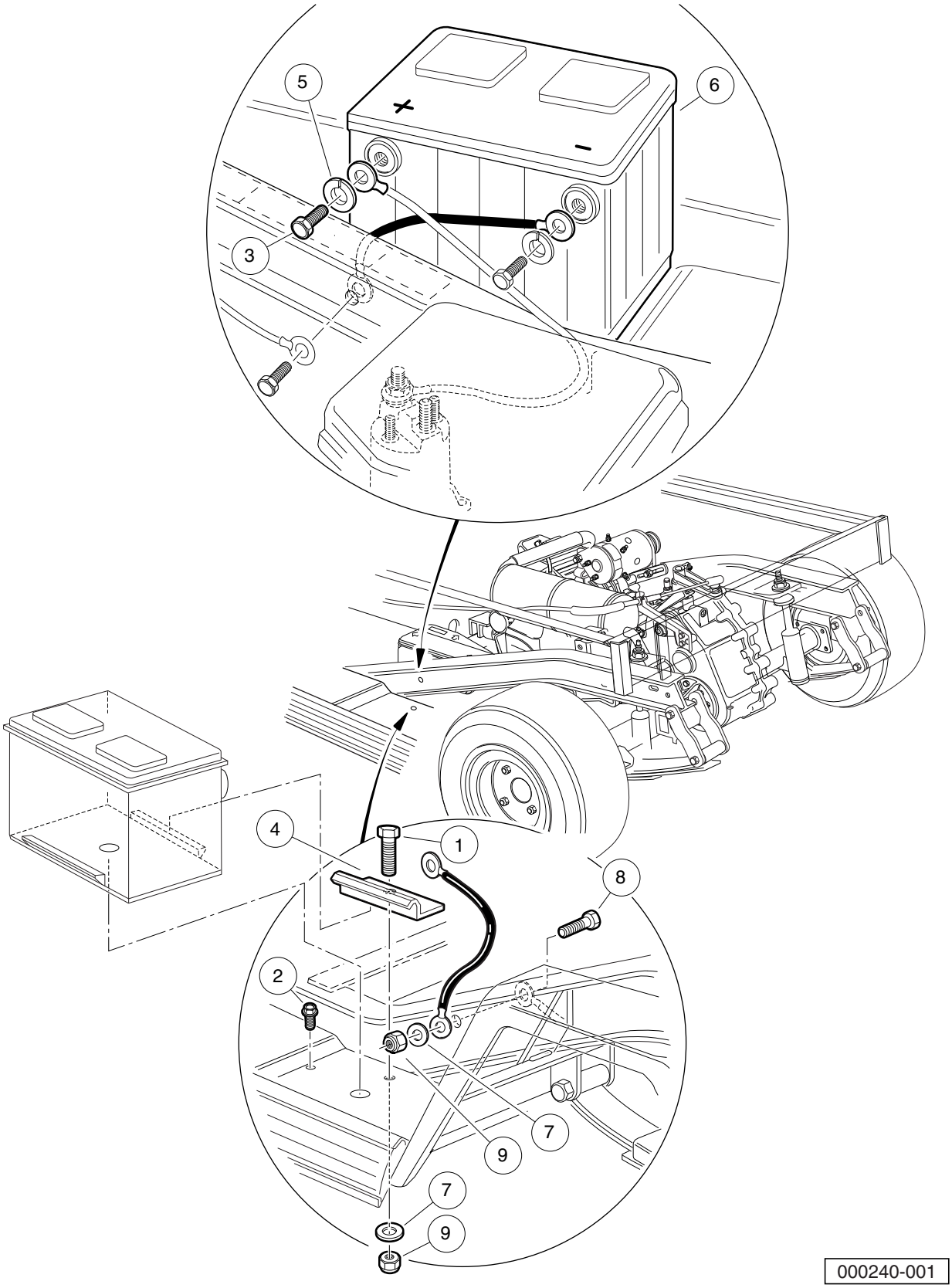
5
6
3
4
1
8
2
7
9
7
9
000240-001

BATTERY – GASOLINE UTILITY VEHICLES

ITEM	PART NO.	DESCRIPTION	QTY
		1 2 3 4	
1	1010934	Screw, 5/16-18 X 1.00 Hex Cap	1
2	1014288	Screw, 5/16-18 X 0.75, Thread-Forming	1
3	1014375	Screw, 3/8-16 X 0.50, Stainless Steel, Hex-Head	2
4	101898001	Clamp, Battery	1
5	102355301	Lockwasher, 3/8 Split Ss	2
6	103496801	Battery, Start, 12v	1
7	1241	Washer, 5/16 Type A Flat	2
8	7173	Screw, 5/16-18 X 0.75, Hex-Head Cap	1
9	7473	Locknut, 5/16-18 Nylon Insert	2

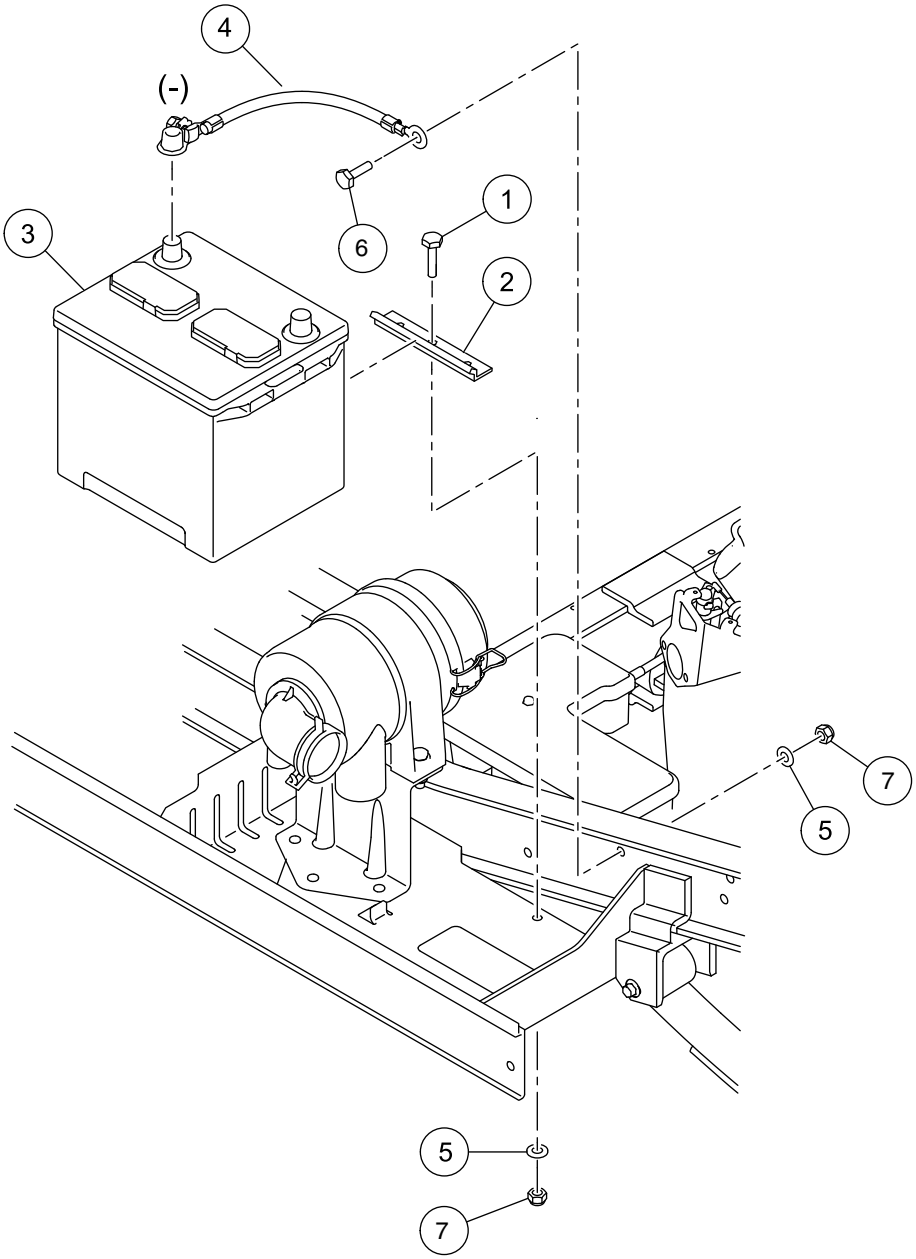

000250-001

TOP-POST BATTERY - GASOLINE UTILITY VEHICLES

ITEM	PART NO.	DESCRIPTION	QTY
		1 2 3 4	
1	1010934	Screw, 5/16-18 X 1.00 Hex Cap	1
2	101898001	Clamp, Battery	1
3	105237301	Battery, Start, 12v, Type 26	1
4	105256701	Wire Assy, 4ga, Battery, (top-post) B-, Gas	1
5	1241	Washer, 5/16 Type A Flat	2
6	7173	Screw, 5/16-18 X 0.75, Hex-Head Cap	1
7	7473	Locknut, 5/16-18 Nylon Insert	2

7

G

ENGINE (SUBARU EX40)

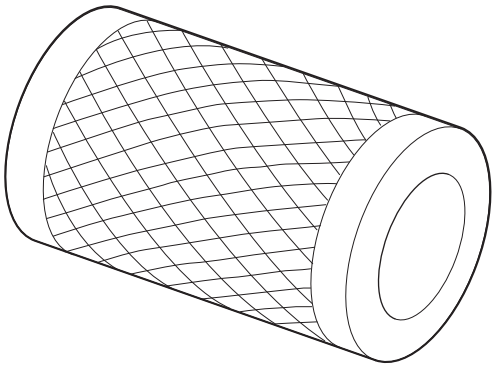

1

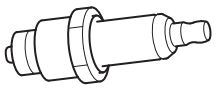

2

000992-003

TUNE-UP PARTS – SUBARU EX40

ITEM	PART NO.	DESCRIPTION	QTY
		1 2 3 4	
1	102558201	Air Filter, 4 Inch	1
2	105017801	Spark Plug, Subaru EX40	1

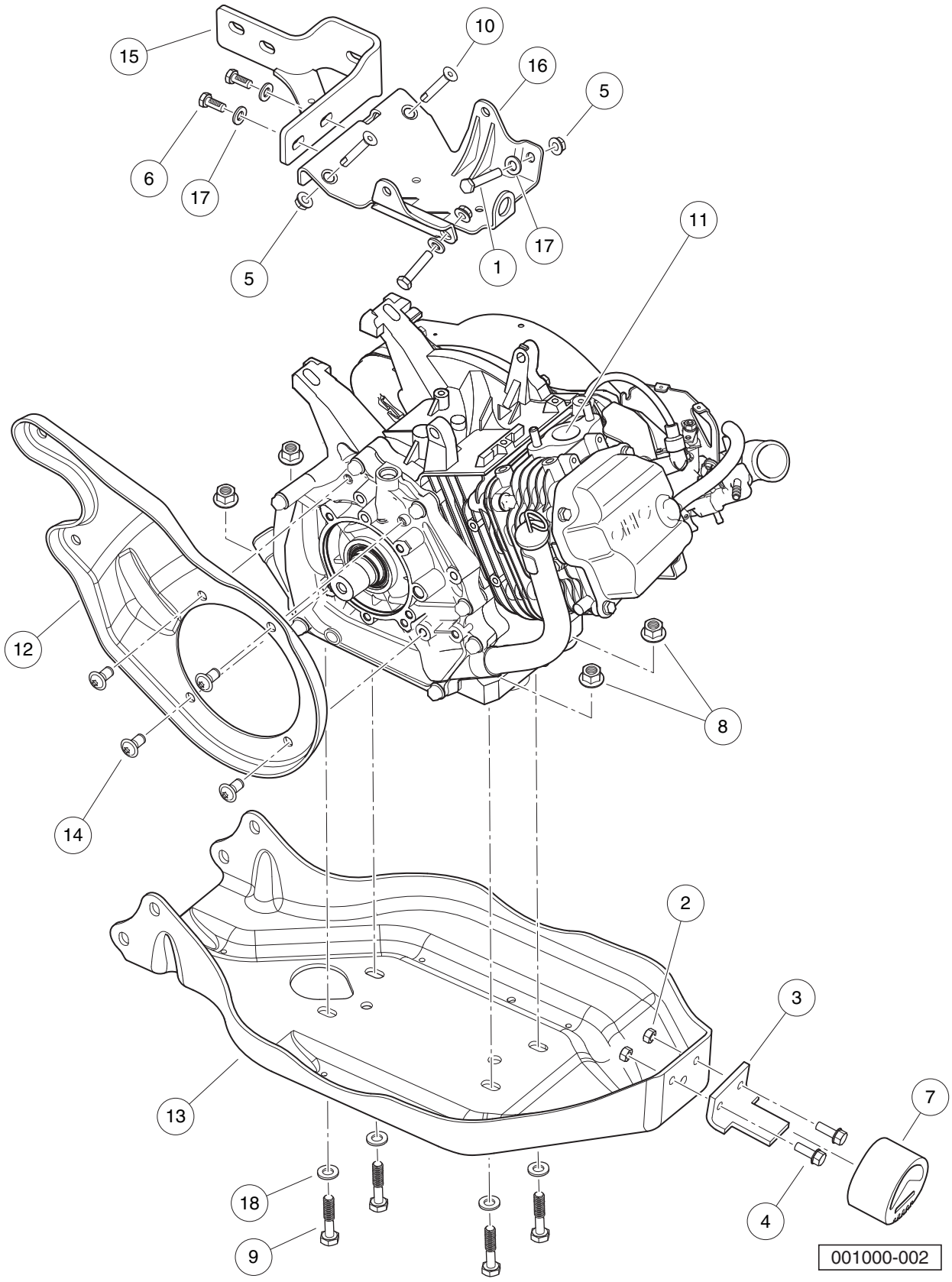
15
10
16
5
6
17
17
5
1
11
12
8
14
2
3
13
7
18
4
9
001000-002

ENGINE AND ENGINE MOUNTING, UTILITY – TO EARLY-2016 MODEL YEAR

ITEM	PART NO.	DESCRIPTION	QTY
		1 2 3 4	
1	1010577	Bolt, Hex-Head, 5/16-18 X 1.50	2
2	1013924	Nut, 5/16-24, Hex Head Cone	2
3	101834602	Bracket, Snubber, Tall	1
4	101884801	Screw, 5/16-24 X 0.875, Grade-8	2
5	101963401	Locknut, 5/16-18 Hex Flange	4
6	102242101	Screw, 5/16-18 X 3/4 Hex-Head with Patch	2
7	102540301	Snubber, Inner Frame	1
8	102617201	Nut, Flanged, M10 X 1.5, Mechanically Deformed	4
9	102732401	Bolt, M10 X 45, Zn-Ni (Black)	4
10	103196202	5/16-18x1.75, Bolt, Loctite	2
11	103882801	Engine, Gas, Subaru EX40, EFI	1
12	103979401	Plate, Mounting, CVT, Center	1
13	103982201	Plate, Engine/Axle Mounting	1
14	103996201	Screw, 3/8-16 X .75, Btn Hd Cap	4
15	105134601	Bracket, Mounting, Transaxle/Exhaust,†EX40	1
16	105149301	Bracket,†Mounting, Starter/Generator,†EX40	1
17	1241	Washer, 5/16 Type A Flat	4
18	96741046	Washer, M10, Hard	4

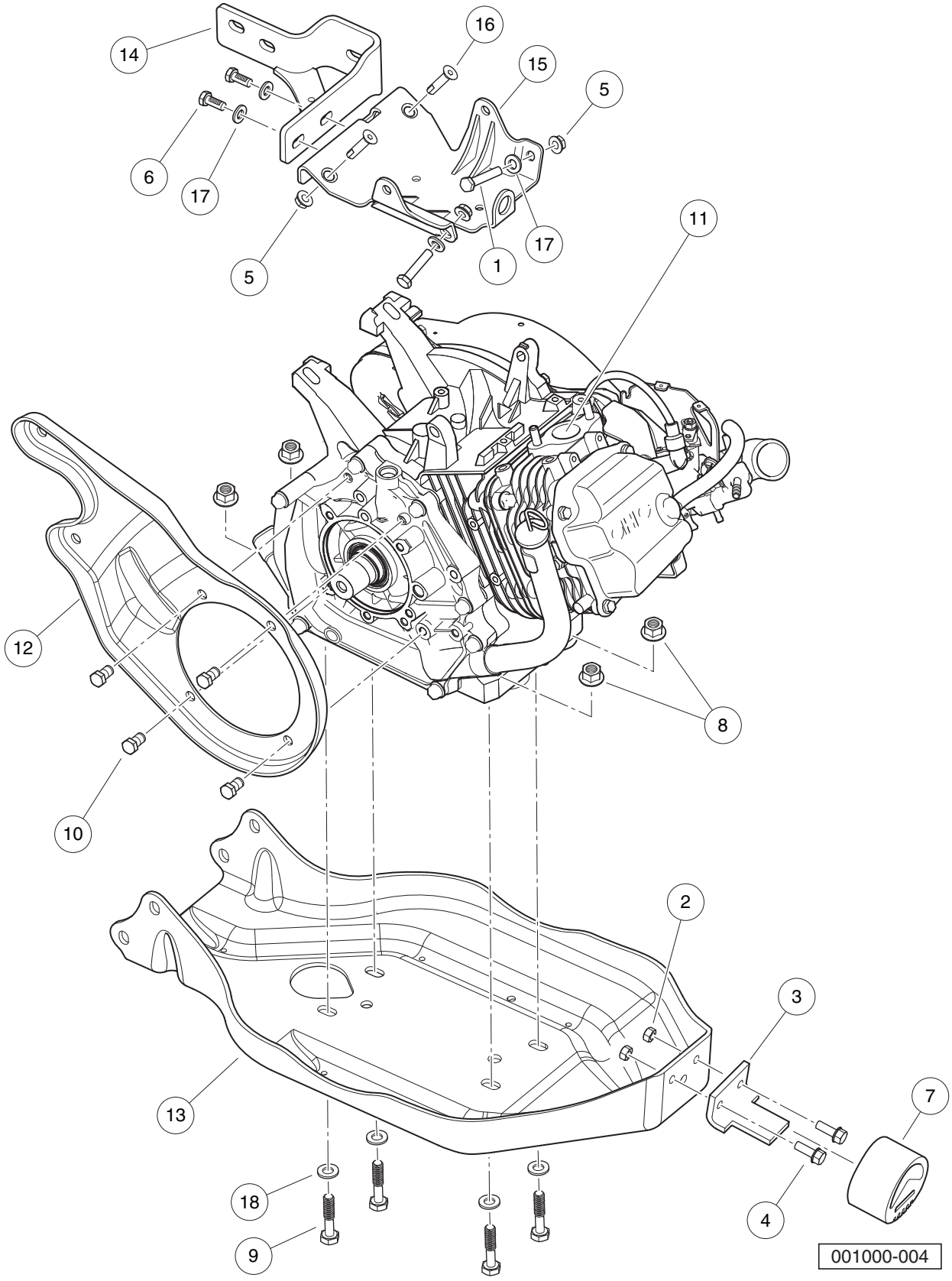
14
16
15
5
6
17
17
5
1
11
12
8
10
2
3
7
13
18
4
9
001000-004

ENGINE AND ENGINE MOUNTING, UTILITY – FROM EARLY-2016 MODEL YEAR

ITEM	PART NO.	DESCRIPTION	QTY
		1 2 3 4	
1	1010577	Bolt, Hex-Head, 5/16-18 X 1.50	2
2	1013924	Nut, 5/16-24, Hex Head Cone	2
3	101834602	Bracket, Snubber, Tall	1
4	101884801	Screw, 5/16-24 X 0.875, Grade-8	2
5	101963401	Locknut, 5/16-18 Hex Flange	4
6	102242101	Screw, 5/16-18 X 3/4 Hex-Head with Patch	2
7	102540301	Snubber, Inner Frame	1
8	102617201	Nut, Flanged, M10 X 1.5, Mechanically Deformed	4
9	102732401	Bolt, M10 X 45, Zn-Ni (Black)	4
10	103508101	Bolt, 3/8-16 X .75 Lock Patch	4
11	103882801	Engine, Gas, Subaru EX40, EFI	1
12	103979401	Plate, Mounting, CVT, Center	1
13	103982201	Plate, Engine/Axle Mounting	1
14	105134601	Bracket, Mounting, Transaxle/Exhaust,†EX40	1
15	105149301	Bracket,†Mounting, Starter/Generator,†EX40	1
16	105262401	Screw, 5/16-18 X 1.25, Cs, Lck	2
17	1241	Washer, 5/16 Type A Flat	4
18	96741046	Washer, M10, Hard	4

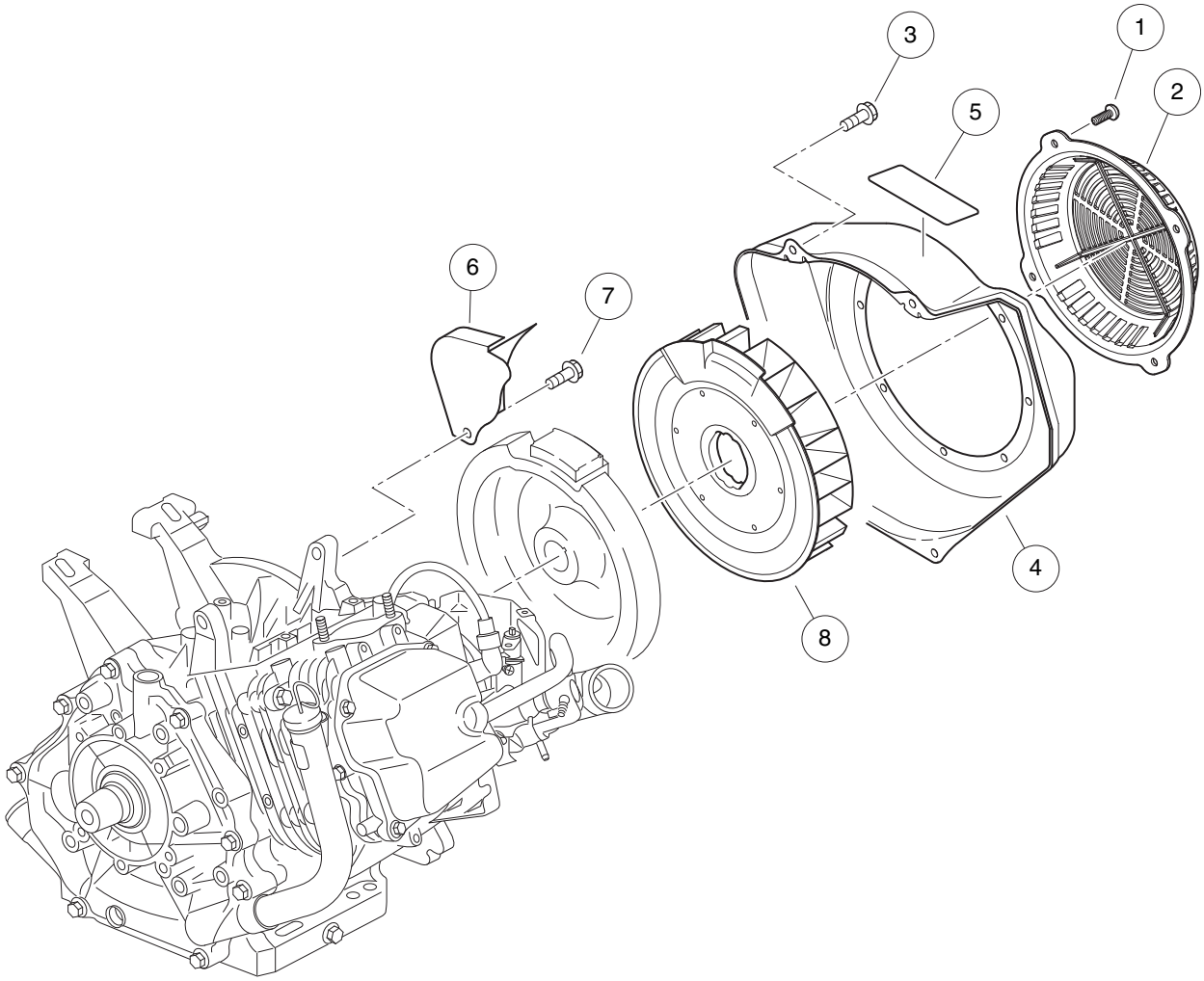

001001-001

FAN AND SHROUD – EX40

ITEM	PART NO.	DESCRIPTION	QTY
		1 2 3 4	
1	1015969	Screw, M6-1.00 X 10mm, Pan Hd	4
2	103995901	Cover, Fan, EX40	1
3	105012601	Bolt, Flange, M6x1.0x12, EX40	4
4	105016701	Housing, Fan, EX40	1
5	105016801	Label, Engine Warning, EX40	1
6	105016901	Baffle, Crankcase, EX40	1
7	105017001	Bolt, Baffle, M8x1.25x12 Ex40	1
8	105017101	Fan, Cooling, EX40	1

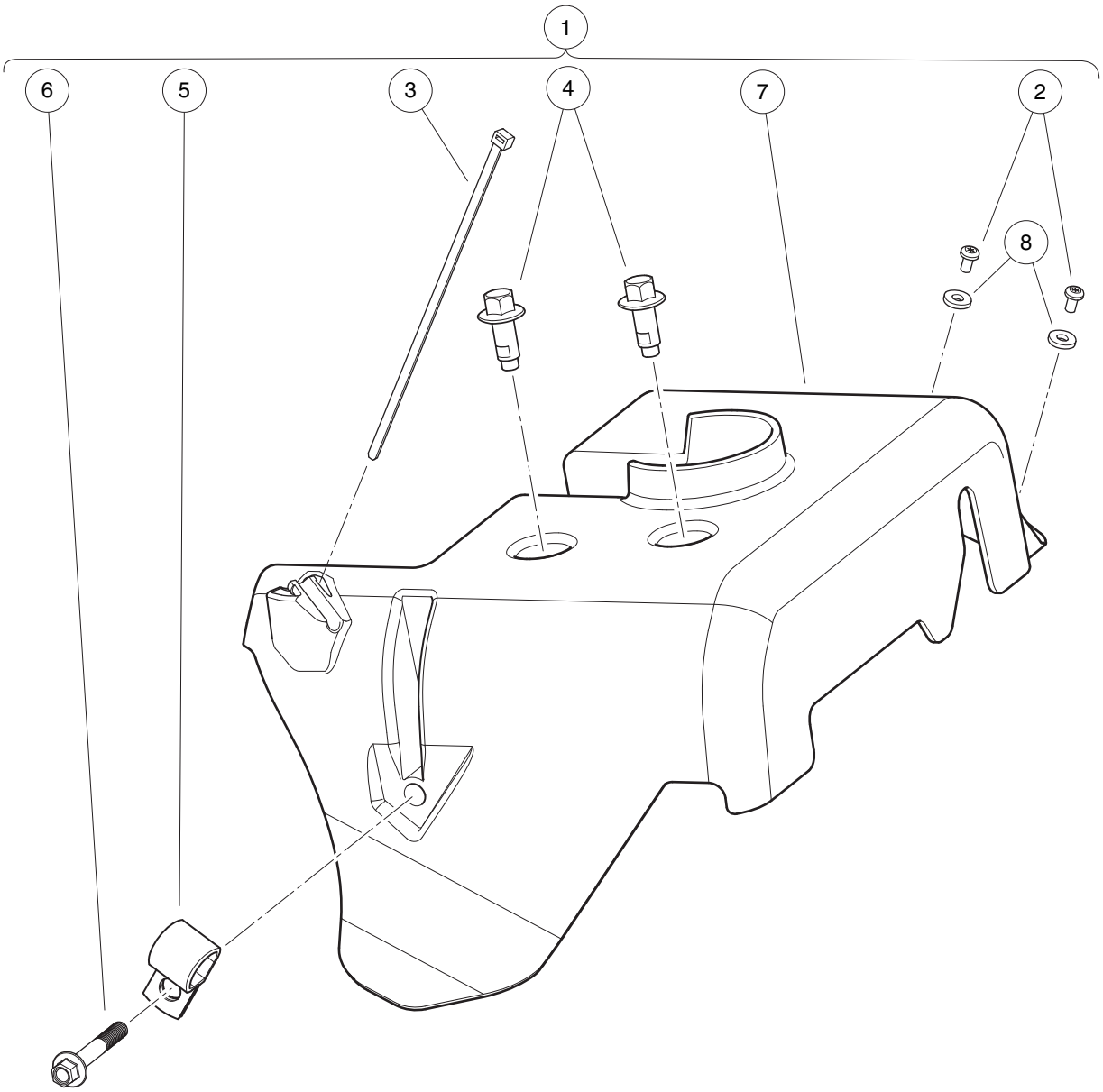

001002-001

AIR DEFLECTOR – EX40

ITEM	PART NO.	DESCRIPTION	QTY
		1 2 3 4	
1	105084801	Kit, Air Deflector, Subaru EX40 (includes items 2 through 8)	1
2	1016103	Screw, Pan Hd Tx, Taptite 6-32	2
3	101824101	Tie Wrap, Black	1
4	102298116	Bolt, Flanged Head, M8 X 16.0	2
5	102410604	P-clamp, Insulated, 0.625 Inch	1
6	102541402	Bolt, M6x1.0x40, Hex Flange Head, Blk-I	1
7	105075301	Deflector, Air, Subaru EX40	1
8	7591	Washer, #6, Flat	2

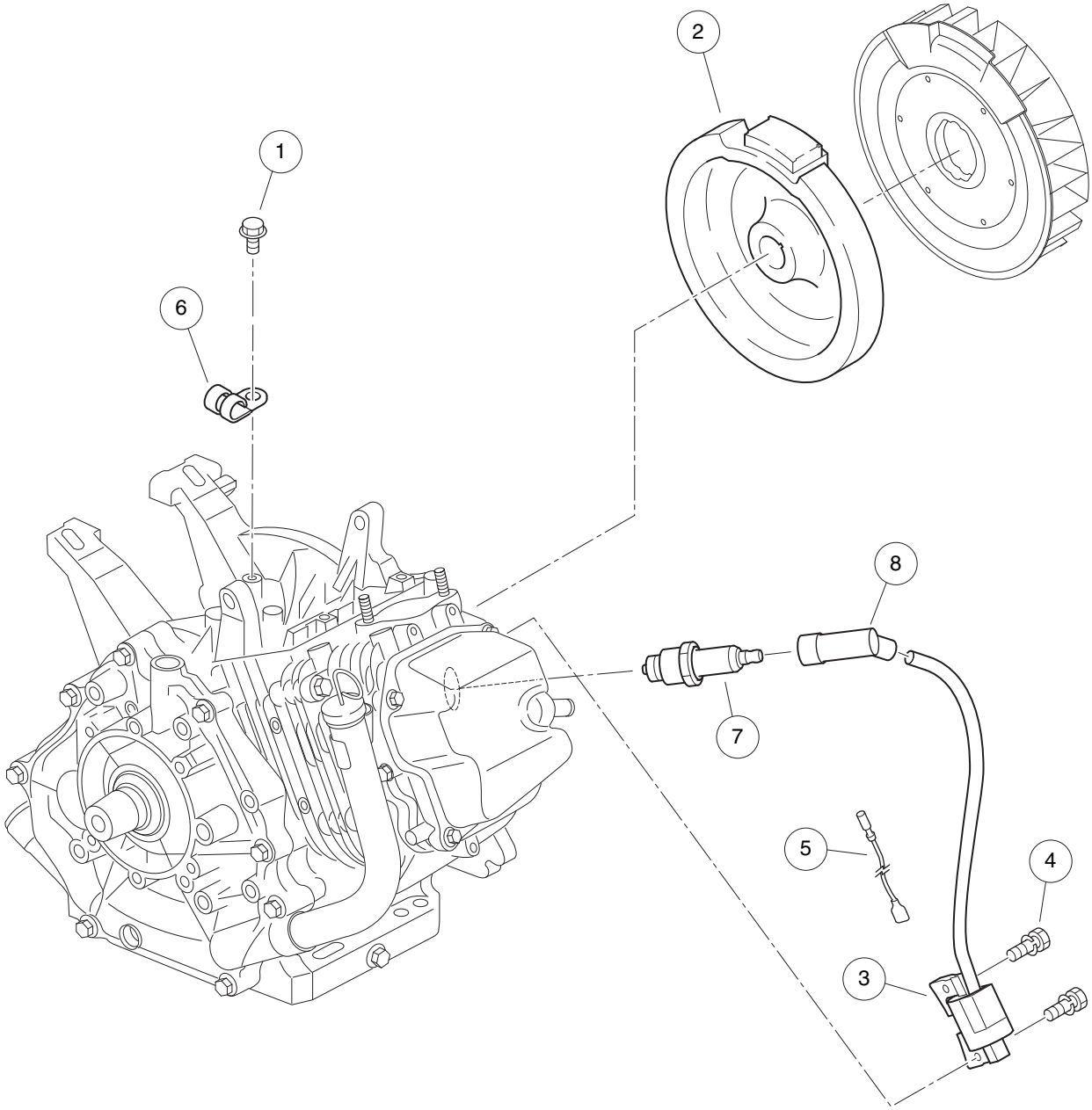

001003-001

IGNITION COMPONENTS AND FLYWHEEL – EX40

ITEM	PART NO.	DESCRIPTION	QTY
		1 2 3 4	
1	105016001	Bolt, Flange, M6x1.0x8, EX40	1
2	105017301	Flywheel, EX40	1
3	105017401	Coil, Ignition, CDI, EX40	1
4	105017501	Asm, Bolt-Washer, Coil, EX40	2
5	105017601	Asm, Wire, Coil Control, EX40	1
6	105017701	Clamp, Coil Control Wire, EX40	1
7	105017801	Spark Plug, Subaru EX40	1
8	105017901	Cap, Spark Plug, EX40	1

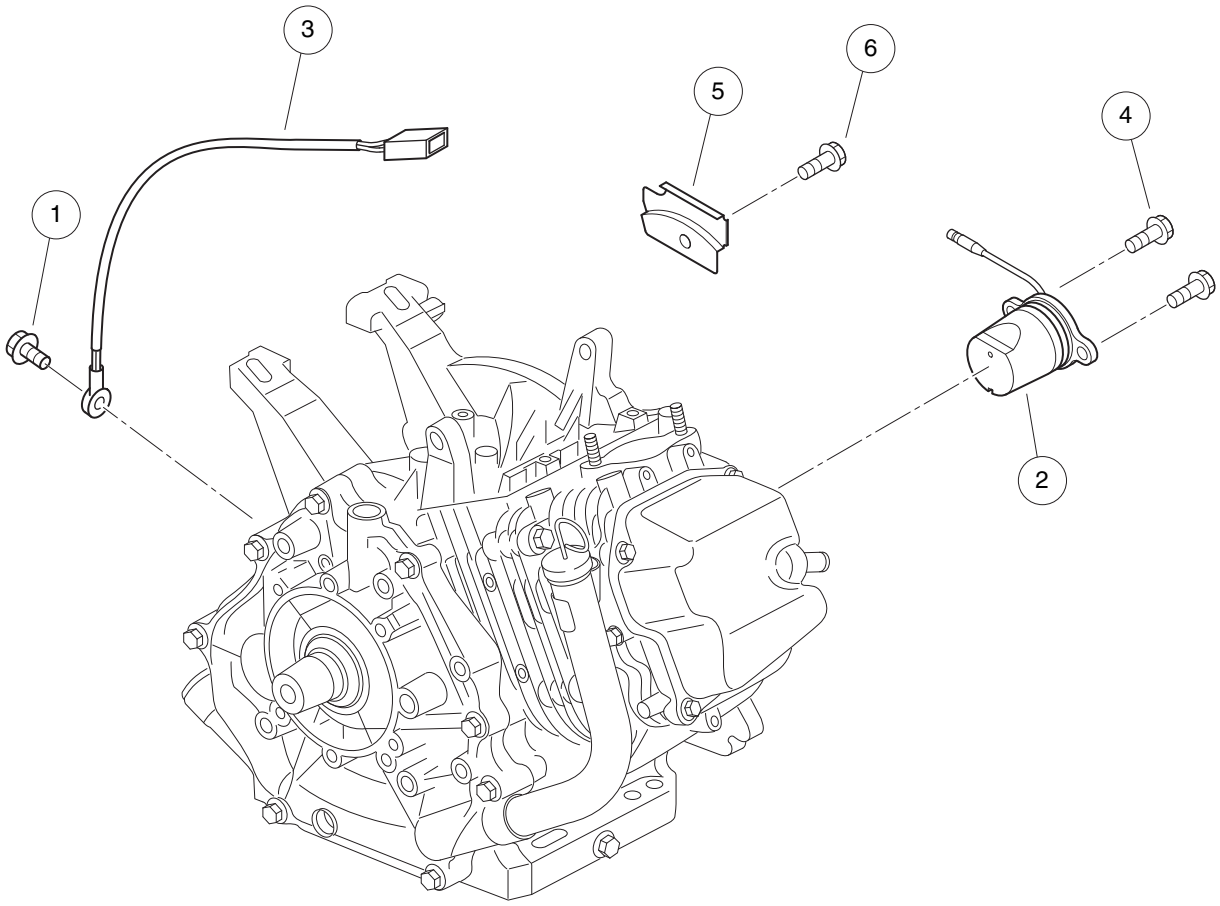

001004-001

ITEM	PART NO.	DESCRIPTION	QTY
		1 2 3 4	
1	105012601	Bolt, Flange, M6x1.0x12, EX40	1
2	105018001	Sensor, Oil Level, EX40	1
3	105018101	Sensor, Temperature, EX40	1
4	105018201	Bolt, Oil Sensor, M6x1.0x14, EX40	2
5	105018301	Clamp, Oil Sensor Wire, EX40	1
6	105018401	Bolt, Tap, Oil Wire Clamp, EX40	1

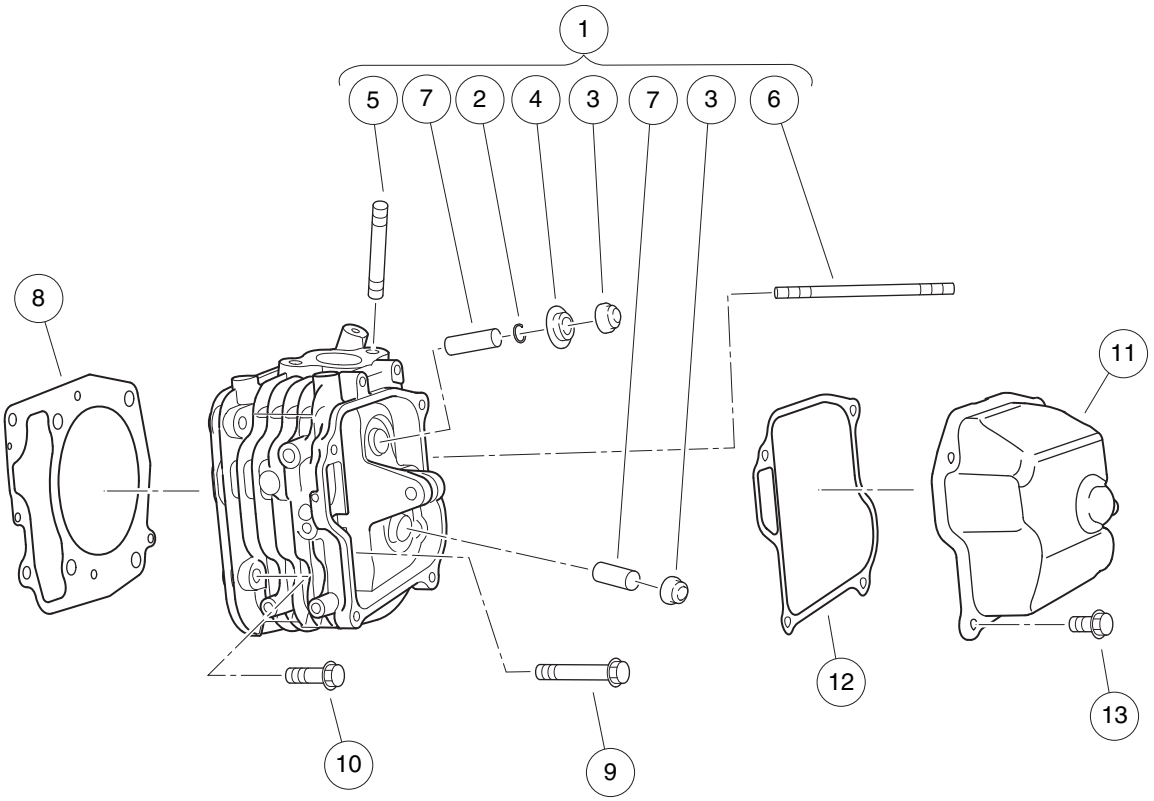

001005-001

CYLINDER HEAD – EX40

ITEM	PART NO.	DESCRIPTION	QTY
		1 2 3 4	
1	105011901	Asm, Cylinder Head, EX40 (includes items 2 through 7)	1
2	105010101	Clip, Retainer Plate, EX40	1
3	105010201	Seal, Valve, EX40	2
4	105010301	Plate, Retainer, EX40	1
5	105010801	Stud, Mounting, Exhaust, EX40	2
6	105010901	Stud, Mounting, Intake, EX40	2
7	105018501	Guide, Valve, EX40	2
8	105012001	Gasket, Head, EX40	1
9	105012101	Bolt, Head, M10x1.25x75, EX40	4
10	105012201	Bolt, Head, M8x1.25x35, EX40	2
11	105012301	Cover, Rocker, EX40	1
12	105012401	Gasket, Rocker Cover, EX40	1
13	105012601	Bolt, Flange, M6x1.0x12, EX40	4

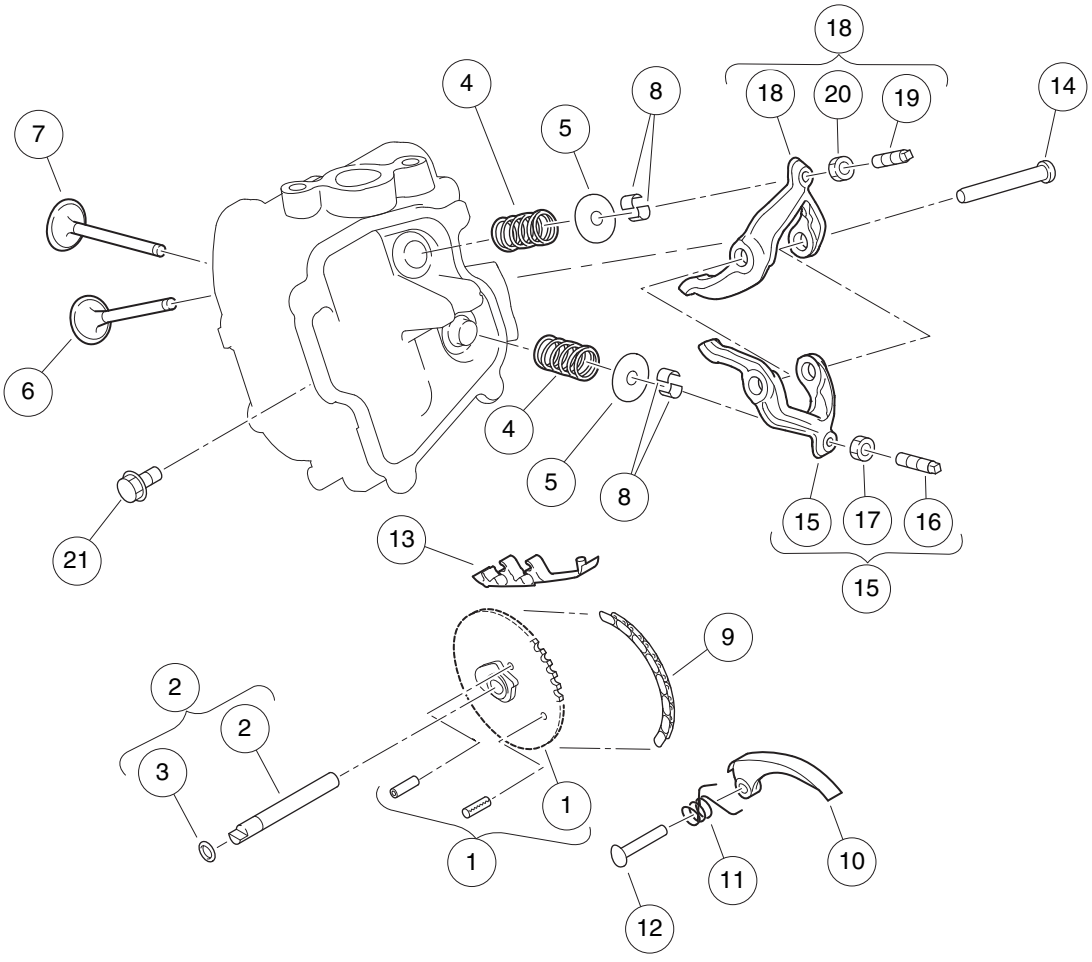

001006-001

VALVETRAIN AND TIMING CHAIN – EX40

ITEM	PART NO.	DESCRIPTION	QTY
		1 2 3 4	
1	105014201	Asm, Cam/Chain Sprocket, EX40	1
2	105014301	Asm, Camshaft and O-ring, EX40 (includes item 3)	1
3	105014401	O-ring, Camshaft, EX40	1
4	105014501	Spring, Valve, EX40	2
5	105014601	Retainer, Spring, EX40	2
6	105014701	Valve, Intake, EX40	1
7	105014801	Valve, Exhaust, EX40	1
8	105014901	Collet, Valve, EX40	4
9	105015001	Chain, Timing, EX40	1
10	105015101	Tensioner, Chain, EX40	1
11	105015201	Spring, Tension, EX40	1
12	105015301	Pin, Tensioner, EX40	1
13	105015401	Guide, Chain, EX40	1
14	105015501	Shaft, Rocker, EX40	1
15	105015601	Asm, Rocker Arm, Intake, EX40 (includes items 16 and 17)	1
16	105015801	Screw, Adjust, Valve, EX40	1
17	105015901	Nut, Adjust, Valve, EX40	1
18	105015701	Asm, Rocker Arm, Exhaust, EX40 (includes items 19 and 20)	1
19	105015801	Screw, Adjust, Valve, EX40	1
20	105015901	Nut, Adjust, Valve, EX40	1
21	105016001	Bolt, Flange, M6x1.0x8, EX40	1

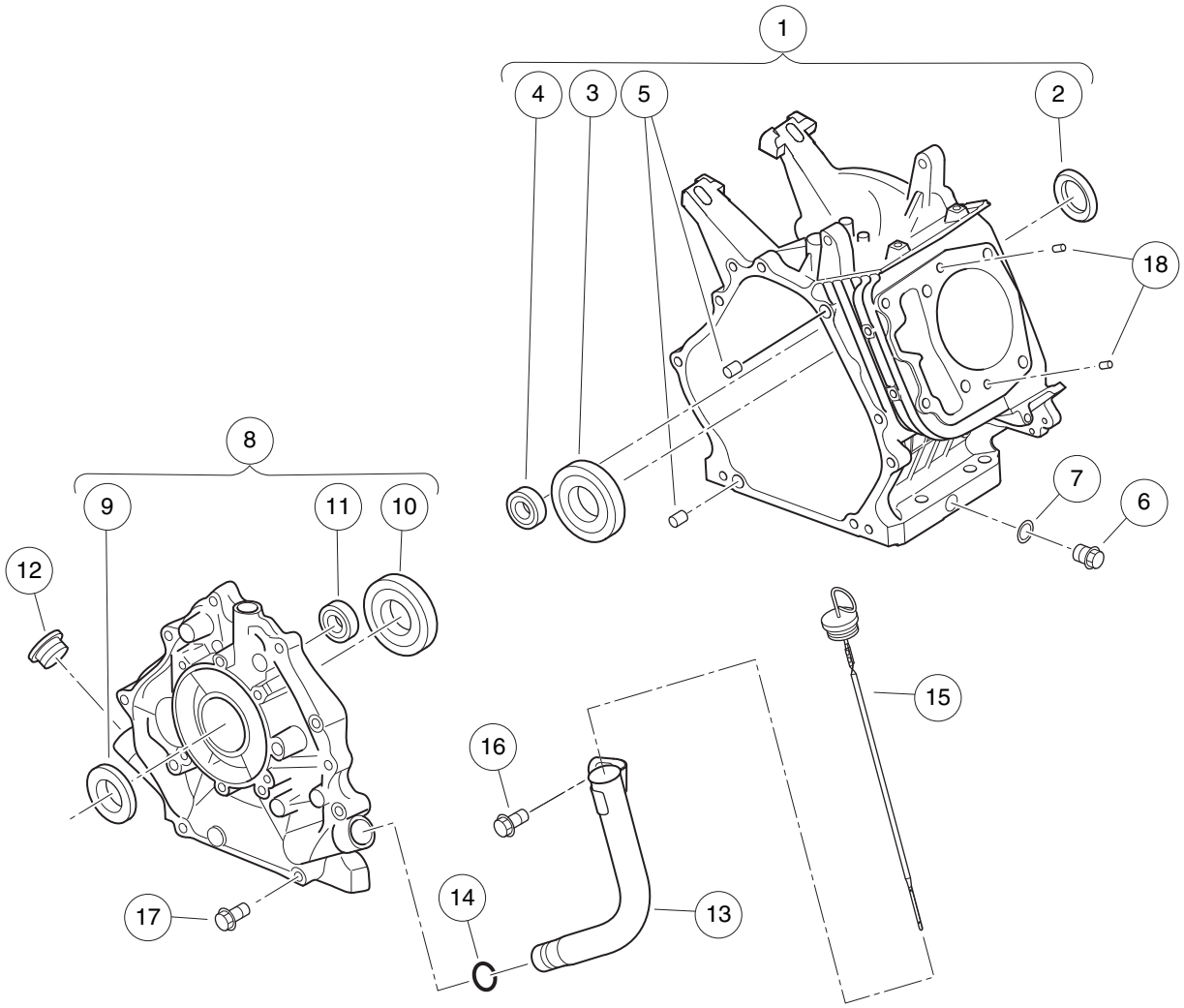

001007-001

CRANKCASE – EX40

ITEM	PART NO.	DESCRIPTION	QTY
		1 2 3 4	
1	105010001	Crankcase, EX40 (includes items 2 through 5)	1
2	105010401	Seal, Oil, Crankshaft, EX40	1
3	105010501	Bearing, Crankshaft, EX40	1
4	105010601	Bearing, Balance Shaft, EX40	1
5	105010701	Pin, Guide, Crankcase, EX40	2
6	105011001	Plug, Oil Drain, EX40	2
7	105011101	Gasket, Oil Drain Plug, EX40	2
8	105011201	Asm, Cover, Crankcase, EX40 (includes items 9 through 11)	1
9	105010401	Seal, Oil, Crankshaft, EX40	1
10	105010501	Bearing, Crankshaft, EX40	1
11	105010601	Bearing, Balance Shaft, EX40	1
12	105011301	Plug, Rubber, Crankcase, EX40	1
13	105011401	Tube, Oil Filler, EX40	1
14	105011501	O-ring, Oil Filler Tube, EX40	1
15	105011601	Dipstick, EX40	1
16	105011701	Bolt, Filler Tube, M8x1.25x12, EX40	1
17	105011801	Bolt, Case Cover, M8x1.25x38, EX40	8
18	105012501	Pin, Guide, Head, EX40	2

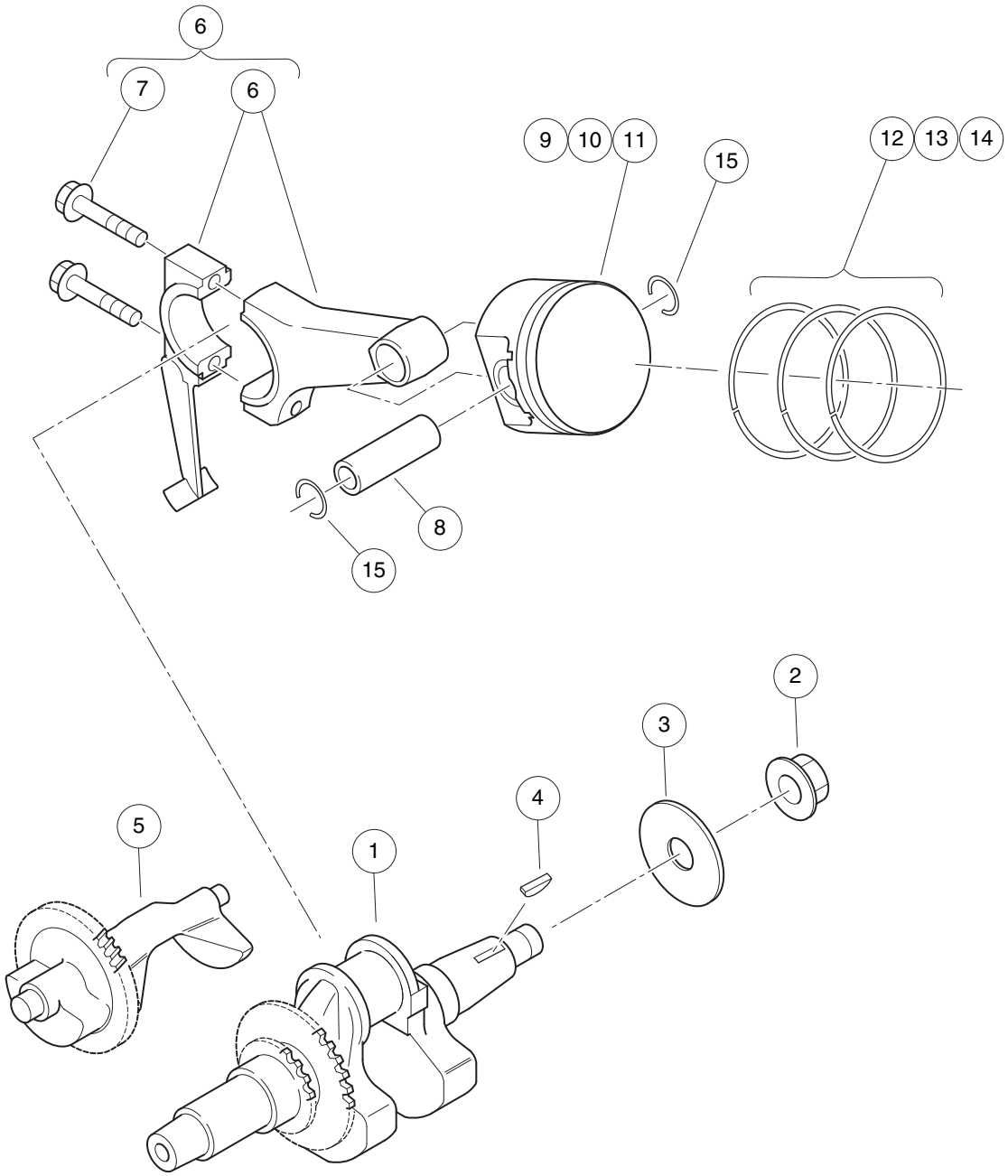

001008-001

CRANKSHAFT AND PISTON – EX40

ITEM	PART NO.	DESCRIPTION	QTY
		1 2 3 4	
1	105012701	Crankshaft, EX40	1
2	105012801	Nut, Crankshaft M18x1.5 Ex40	1
3	105012901	Washer, Crankshaft Ex40	1
4	105013001	Key, Woodruff, Crankshaft, EX40	1
5	105013101	Shaft, Balance, EX40	1
6	105013201	Asm, Rod, Connecting, EX40 (includes item 7)	1
7	105013301	Bolt, Rod M8x1.25x40 Ex40	2
8	105013401	Pin, Piston, EX40	1
9	105013501	Piston, Standard, EX40	1
10	105013601	Piston, 0.25 mm Oversize, EX40	1
11	105013701	Piston, 0.50 mm Oversize, EX40	1
12	105013801	Set, Piston Ring, Standard, EX40	1
13	105013901	Set, Piston Ring, 0.25 mm Oversize, EX40	1
14	105014001	Set, Piston Ring, 0.50 mm Oversize, EX40	1
15	105014101	Clip, Piston Pin, EX40	2

8

G

FUEL SYSTEM – EFI

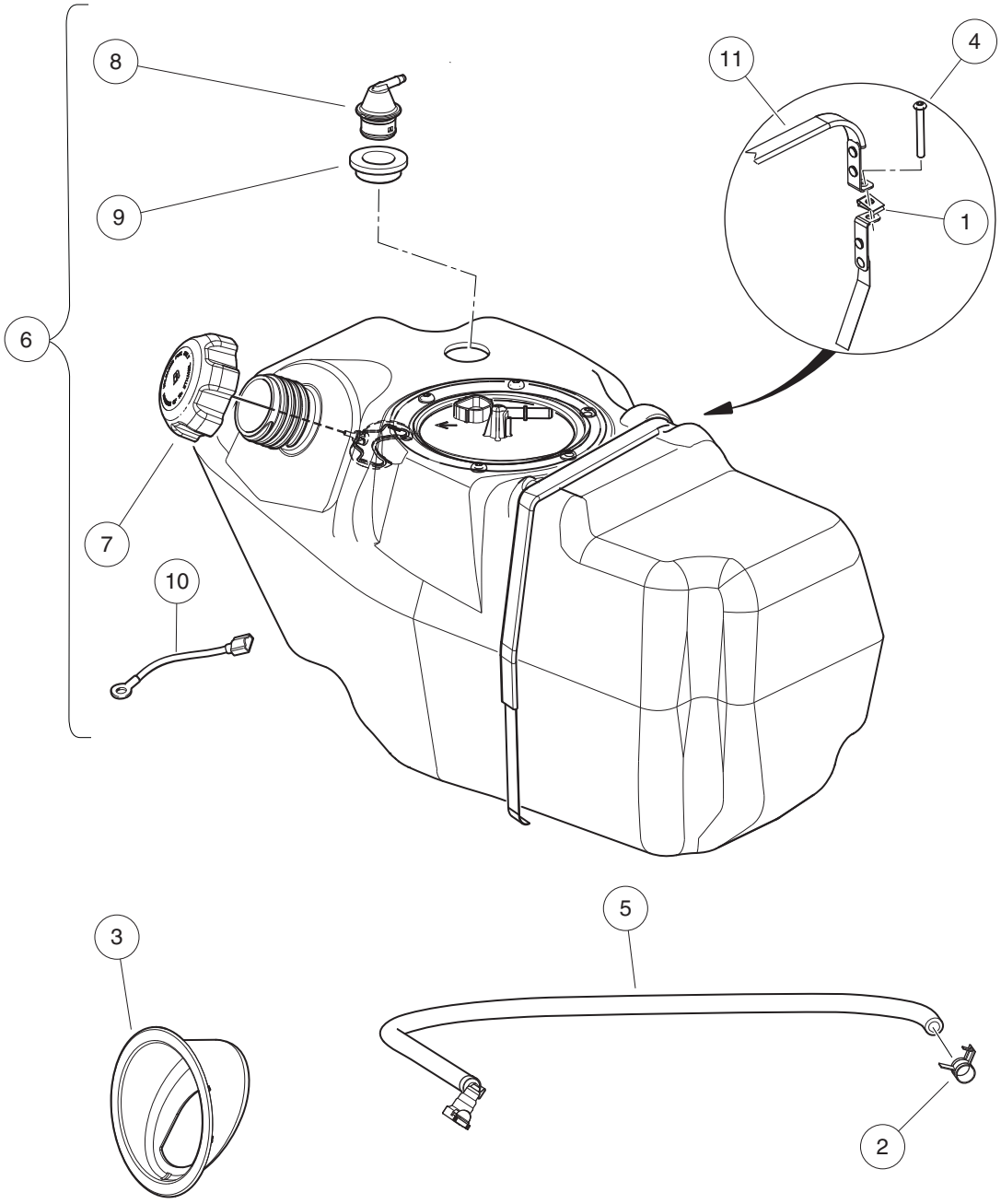

000977-006

FUEL TANK WITH SENDING UNIT, SIDE FILL – EFI

ITEM	PART NO.	DESCRIPTION	QTY
		1 2 3 4	
1	1014116	Nut, 1/4-20 Speed	1
2	102411203	Clamp, Hose, Ctb 14mm Dia.	1
3	102977901	Bezel, Fuel Fill, 5.0 Dia	1
4	103306301	Screw, Bhsc, 1/4-20 X 2.0	1
5	105043501	Asm, Fuel Line, Utility	1
6	105044001	Asm, Tank, Fuel, Side-Fill, Complete, w/Sending Unit (includes items 7 through 10)	1
7	103372101	Cap, Fuel Tank, Gas, Ratchet	1
8	103905201	Assembly, Vent, Fuel, 1/4 Inch O.D.	1
9	103944301	Grommet, Fuel Tank, Vent	1
10	105143301	Wire, Ground, Fuel Tank	1
11	105093601	Retention Strap, Tank	1

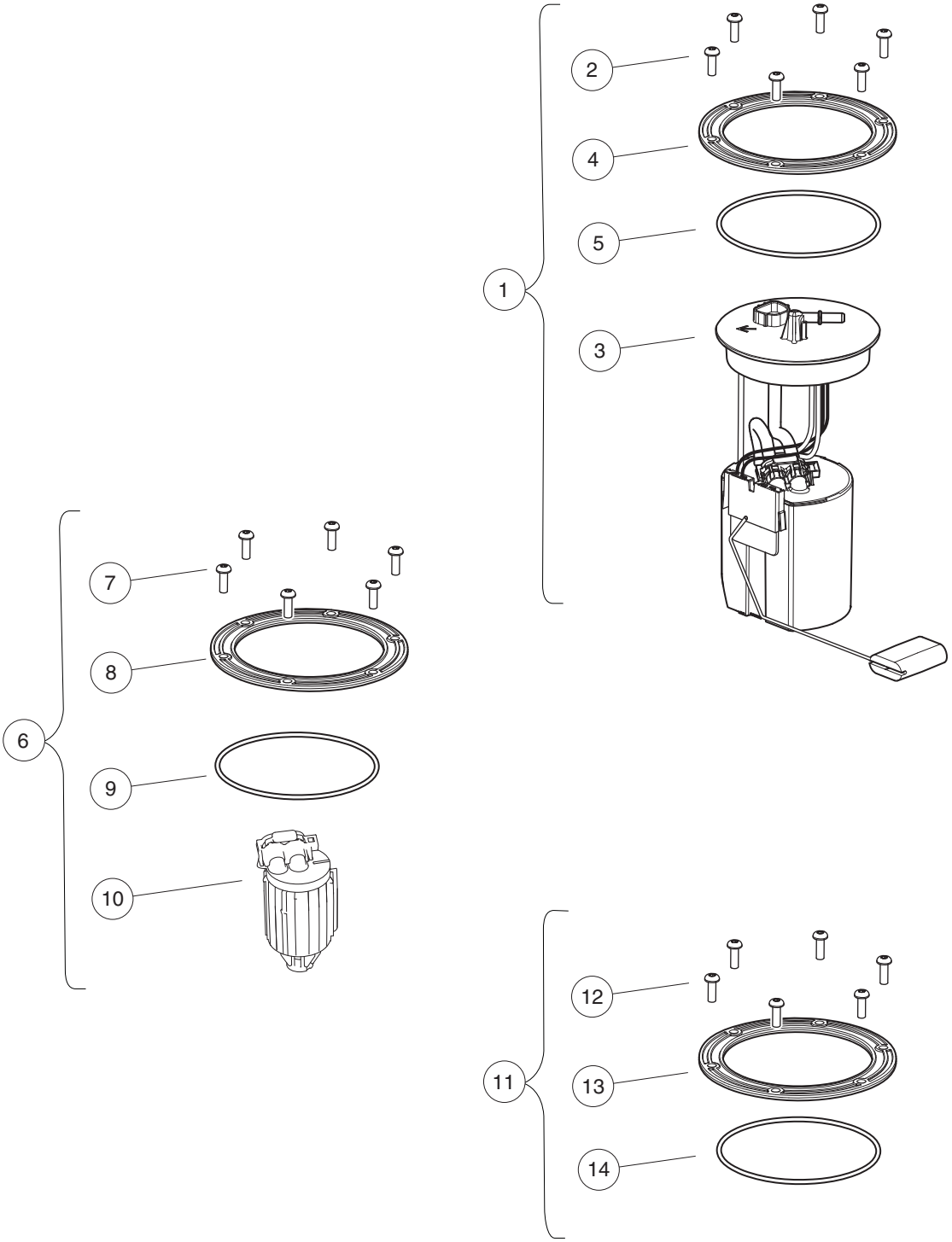

000977-005

FUEL TANK KITS – EFI

ITEM	PART NO.	DESCRIPTION	QTY
		1 2 3 4	
1	105282901	Kit, Fuel Pump Module (includes items 2 through 5)	1
2	102025801	Screw, 1/4-20 X .75 Torx Pn Hd	6
3	105043401	Fuel Pump Module, with Sending Unit	1
4	105043801	Fuel Module, Hold Down Ring	1
5	105043901	O-Ring, Fuel Module	1
6	105282902	Kit, Fuel Filter (includes items 7 through 10)	1
7	102025801	Screw, 1/4-20 X .75 Torx Pn Hd	6
8	105043801	Fuel Module, Hold Down Ring	1
9	105043901	O-Ring, Fuel Module	1
10	105073001	Fuel Filter, EX40, EFI	1
11	105282903	Kit, O-ring (includes items 12 through 14)	1
12	102025801	Screw, 1/4-20 X .75 Torx Pn Hd	6
13	105043801	Fuel Module, Hold Down Ring	1
14	105043901	O-Ring, Fuel Module	1

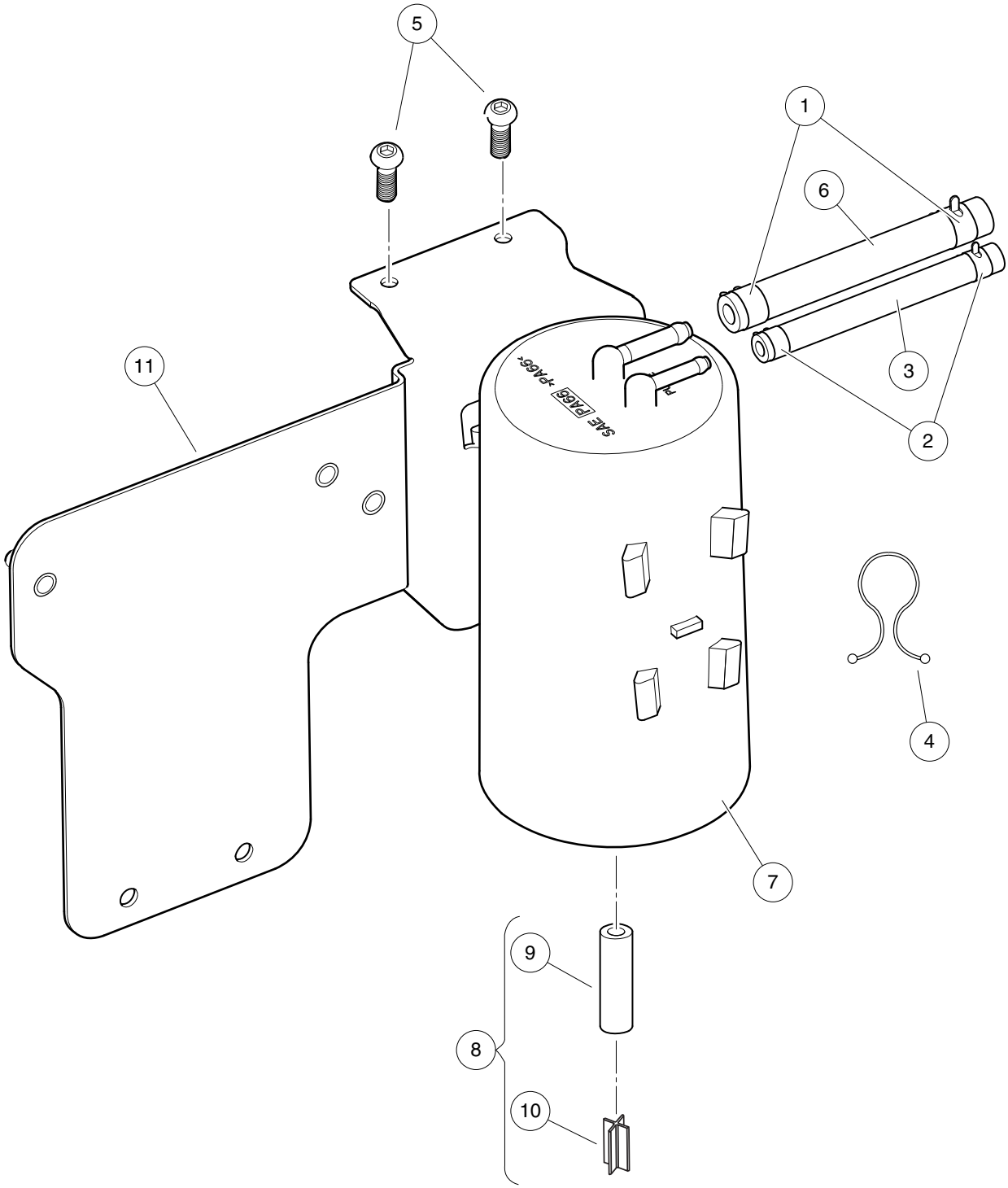
5
1
6
3
2
11
4
7
9
8
10
000980-006

CARBON CANISTER – EFI

ITEM	PART NO.	DESCRIPTION	QTY
		1 2 3 4	
1	1012649	Clamp, 0.460 Red Hose	2
2	1013746	Clamp, 0.301 ID Hose	2
3	1015137	Fuel Line, 3/16 (available by the foot)	A/R
4	101987701	Clamp, Plastic Tie	2
5	102025801	Screw, 1/4-20 X .75 Torx Pn Hd	2
6	102865101	Fuel Line, 1/4 (available by the foot)	A/R
7	103372401	Canister, Carbon	1
8	103756401	Asm, Vent Line, Carbon Canister (includes items 9 and 10)	1
9	N/A	Hose, Vent, 5/16 I.D., Bulk	1
10	N/A	Vent, Barb, 5/16 I.D. Hose	1
11	105044901	Bracket, Carbon Canister/ECU	1

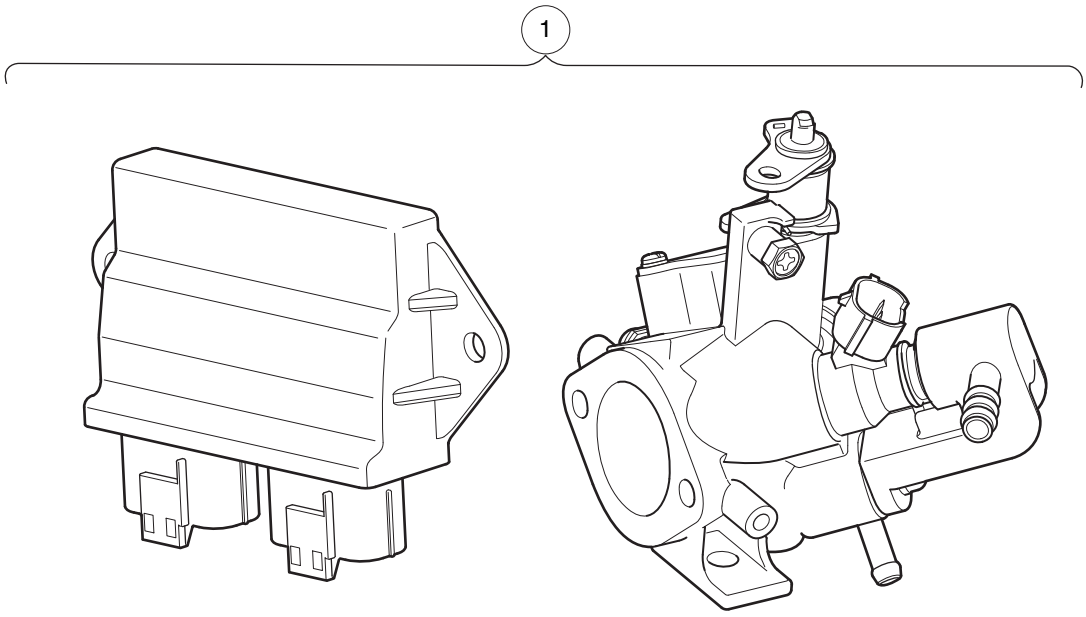

000964-001

ITEM	PART NO.	DESCRIPTION	QTY
		1 2 3 4	
1	105017201	Asm, Throttle Body/Fuel Injector with ECU, EX40	1

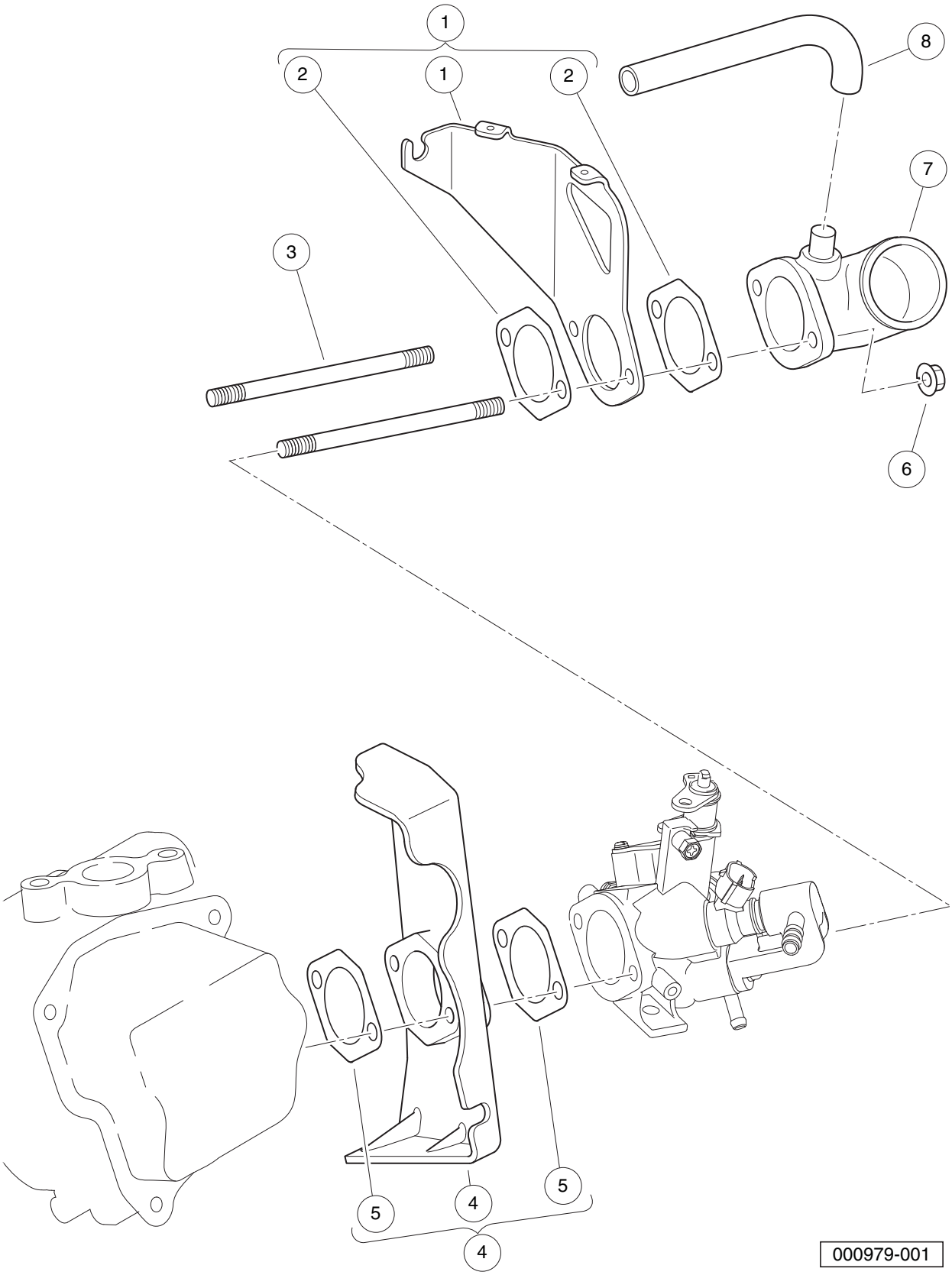
1
2
1
2
8
7
3
6
5
4
5
4
000979-001

THROTTLE BODY MOUNTING – EFI

ITEM	PART NO.	DESCRIPTION	QTY
		1 2 3 4	
1	103983501	Bracket, Operation, EX40 (includes item 2)	1
2	105016201	Gasket, Insulator, EX40	2
3	105010901	Stud, Mounting, Intake, EX40	2
4	105016101	Insulator, EX40 (includes item 5)	1
5	105016201	Gasket, Insulator, EX40	2
6	105016301	Nut, Intake Adapter, M6x1.0, EX40	2
7	105016401	Adapter, Air Intake, EX40	1
8	105016501	Hose, Breather, EX40	1

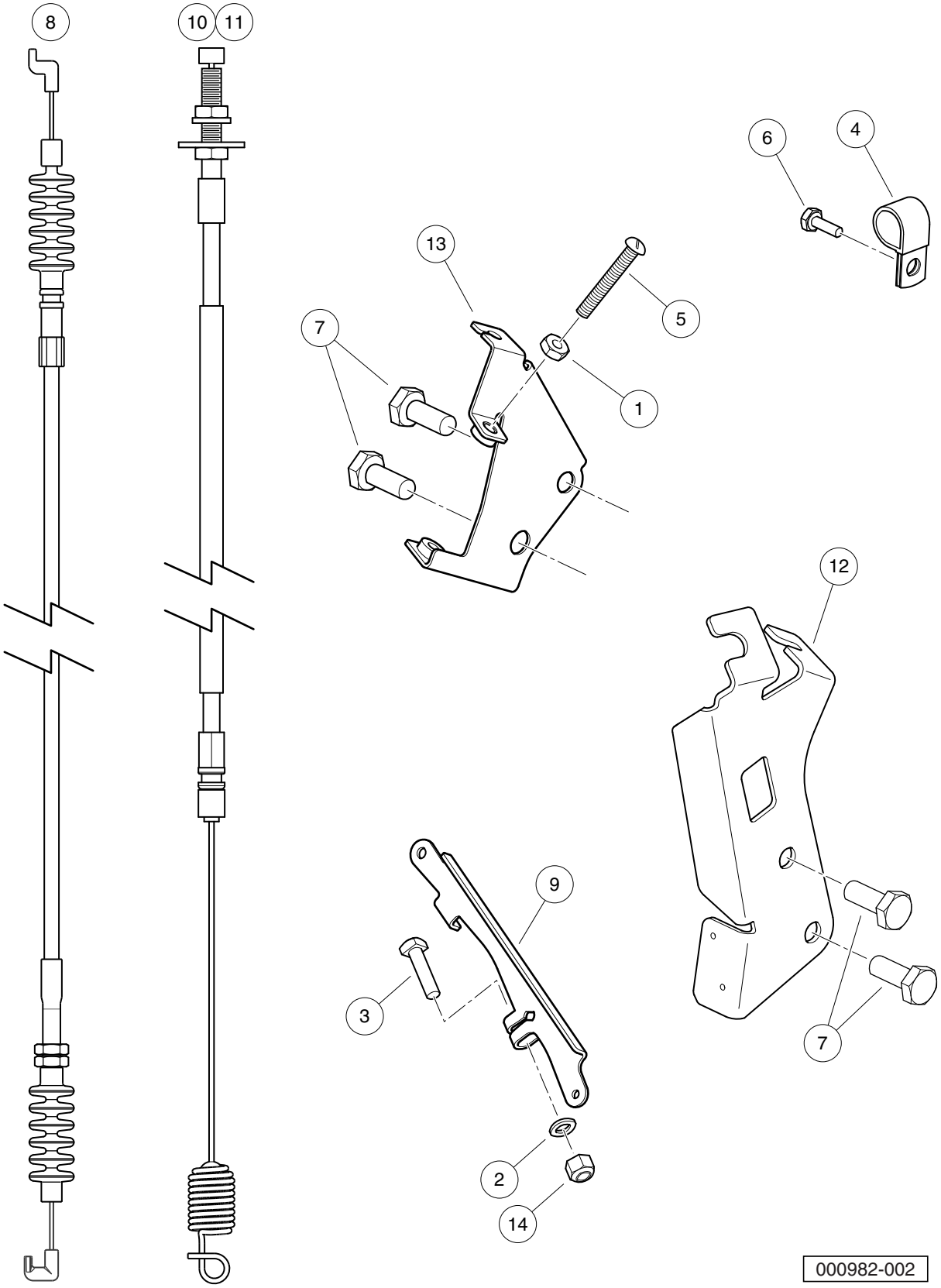
8
10
11
13
7
5
1
6
4
12
9
3
2
14
7
000982-002

GOVERNOR AND ACCELERATOR CABLES – EFI

ITEM	PART NO.	DESCRIPTION	QTY
		1 2 3 4	
1	1011114	Nut, M6-1.00 Hex	1
2	1014007	Washer, 1/4, Flat	1
3	101886101	Screw, 1/4-20 X 1.00, Square-Head	1
4	102410604	P-clamp, Insulated, 0.625 Inch	1
5	102476401	Bolt, Stop, Pedal	1
6	102490301	Bolt, M6 X 1 X 16, Loctite	1
7	102498201	Bolt, M10 X 1.25 X 25, Loctite	4
8	103978001	Cable, Governor, EX40	1
9	104023501	Arm, Governor, ED65	1
10	105007402	Cable, Accelerator, Utility, Low-Speed	1
11	105007403	Cable, Accelerator, Utility, Std-Speed	1
12	105135101	Bracket, Cable, FNR/Accelerator, ED65	1
13	105144401	Weldment, Governor Bracket	1
14	8233	Locknut, 1/4-20, Nylon Insert	1

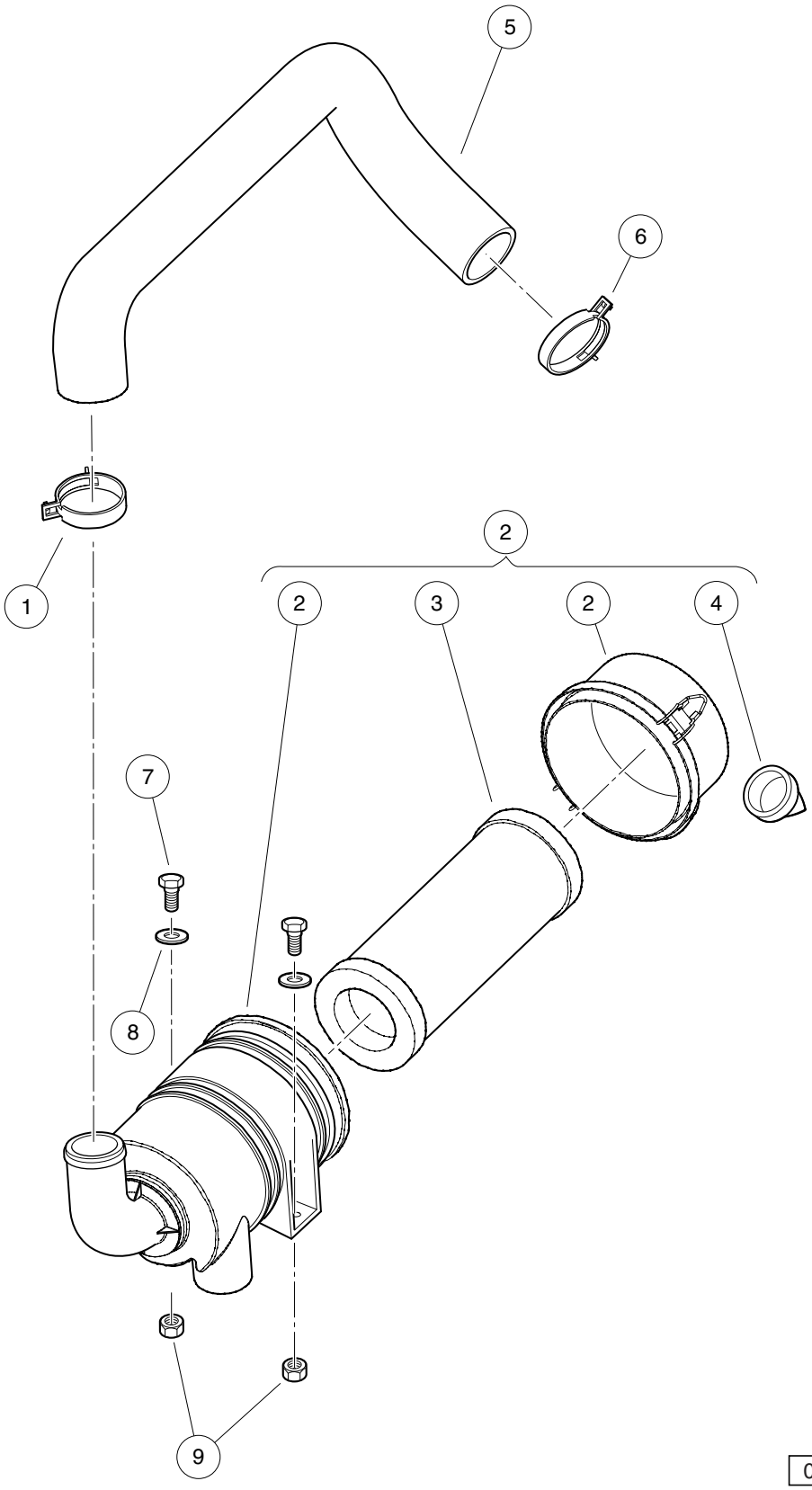
5
6
1
2
2
3
2
4
7
8
9
000983-001

AIR FILTER SYSTEM AND INTAKE HOSE – EFI

ITEM	PART NO.	DESCRIPTION	QTY
		1 2 3 4	
1	102411209	Clamp, Hose, Ctb 55mm Dia.	1
2	105009101	Air Cleaner, Utility with EFI (includes items 3 and 4)	1
3	102558201	Air Filter, 4 Inch	1
4	102725501	Valve, Evacuator, Filter Air	1
5	105043001	Hose, Air Intake, Utility with EFI	1
6	105088501	Clamp, Ctb, 49mm Dia, W/clip	1
7	1218	Screw, 5/16-18 X 1.25 Hex-Head Cap	2
8	1241	Washer, 5/16 Type A Flat	2
9	7473	Locknut, 5/16-18 Nylon Insert	2

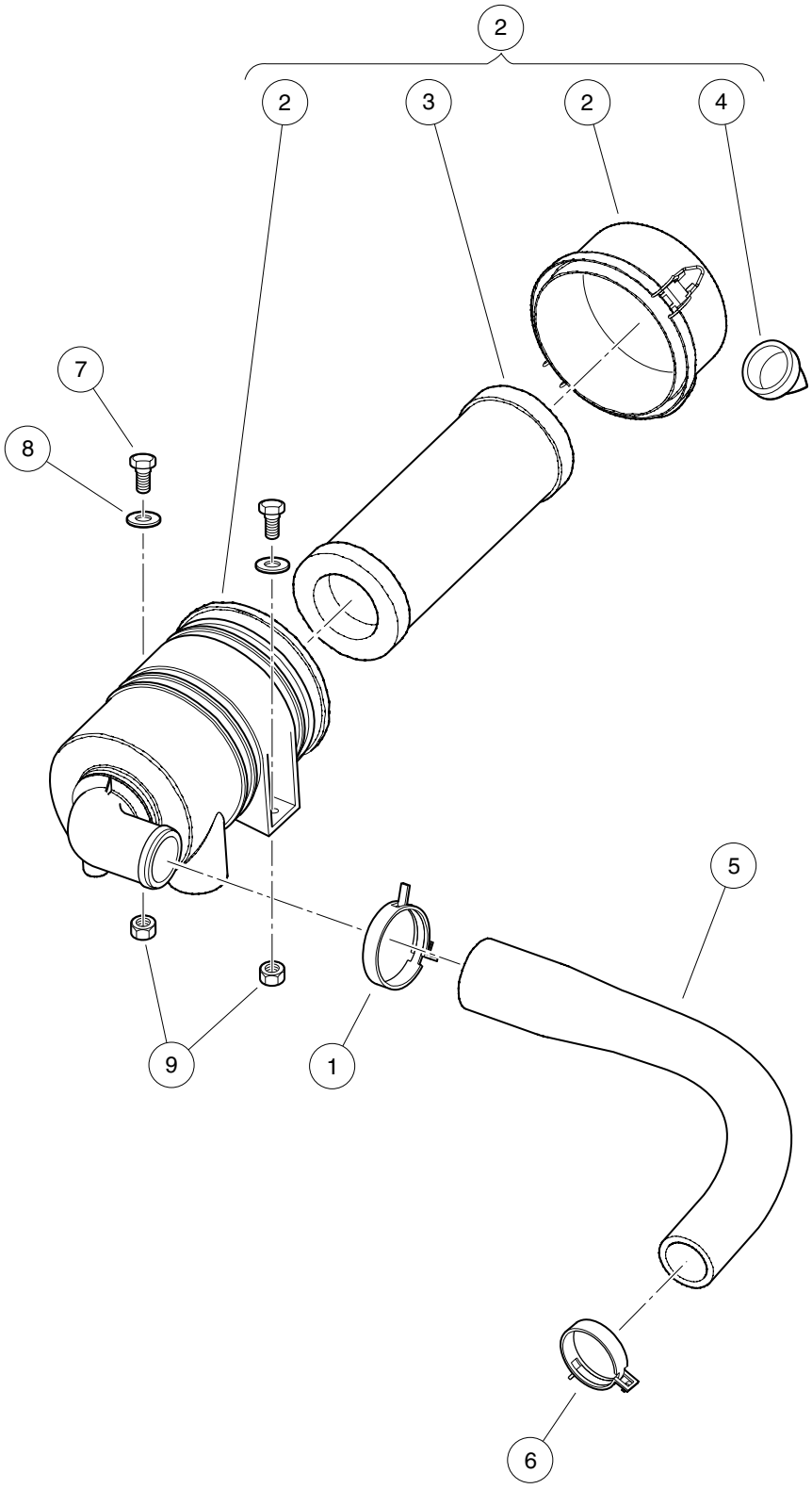
2
2
3
2
4
7
8
5
9
1
6
000984-001

AIR FILTER SYSTEM AND INTAKE HOSE – EFI, LWB UTILITY/ TRANS

ITEM	PART NO.	DESCRIPTION	QTY
		1 2 3 4	
1	102411209	Clamp, Hose, Ctb 55mm Dia.	1
2	105009101	Air Cleaner, Utility with EFI (includes items 3 and 4)	1
3	102558201	Air Filter, 4 Inch	1
4	102725501	Valve, Evacuator, Filter Air	1
5	105009401	Hose, Air Intake, LWB Utility with EFI	1
6	105088501	Clamp, Ctb, 49mm Dia, W/clip	1
7	1218	Screw, 5/16-18 X 1.25 Hex-Head Cap	2
8	1241	Washer, 5/16 Type A Flat	2
9	7473	Locknut, 5/16-18 Nylon Insert	2

9

G

EXHAUST SYSTEM – EX40 ENGINE

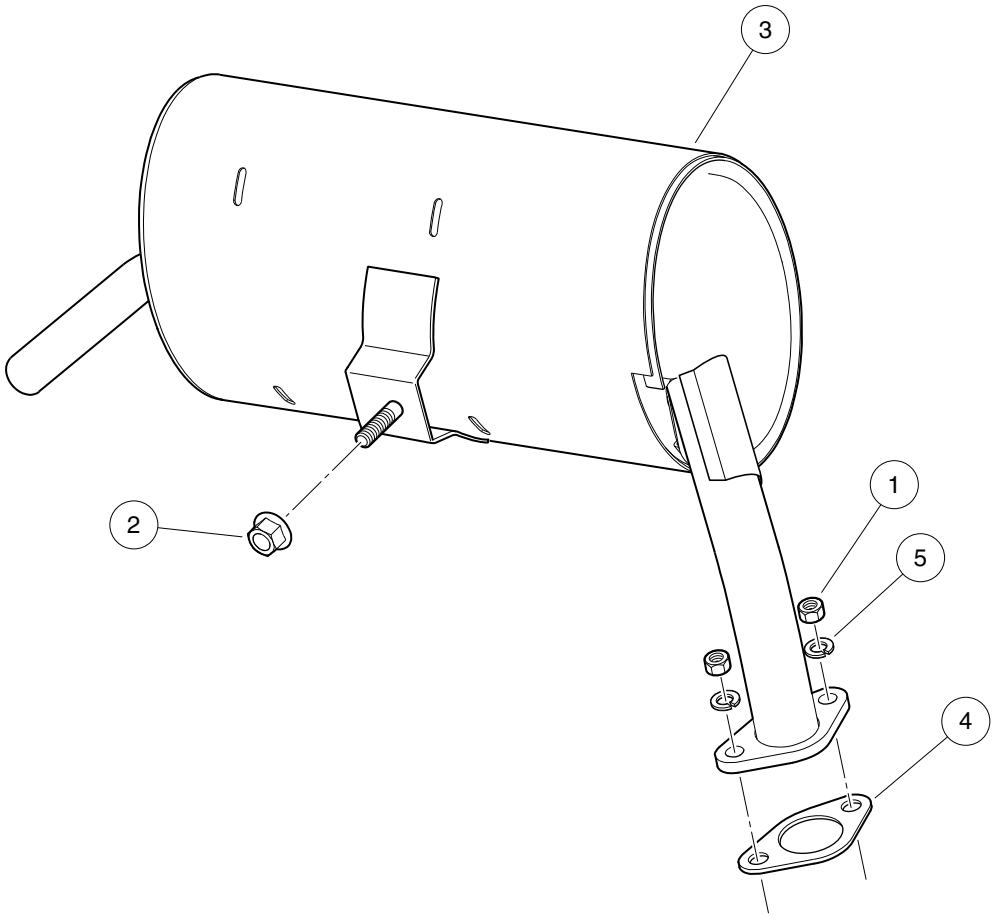

000948-001

EXHAUST SYSTEM – UTILITY

ITEM	PART NO.	DESCRIPTION	QTY
		1 2 3 4	
1	1012528	Nut, M8-1.25 Hex	2
2	102617201	Nut, Flanged, M10 X 1.5, Mechanically Deformed	1
3	105214101	Exhaust, Low, Ex40, Utl	1
4	47539957001	Gasket, Exhaust, Ex40, Graphit	1
5	7174	Lockwasher, 5/16 Split	2

10

G

DRIVE BELT AND CLUTCHES – EX40

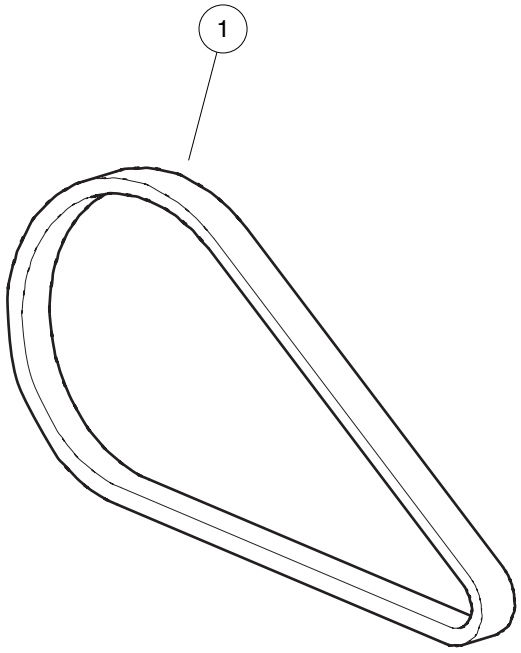

000918-001

DRIVE BELT – KEY-START VEHICLES WITH EFI

ITEM	PART NO.	DESCRIPTION	QTY
		1 2 3 4	
1	103974102	Belt, Drive, Key-Start	1

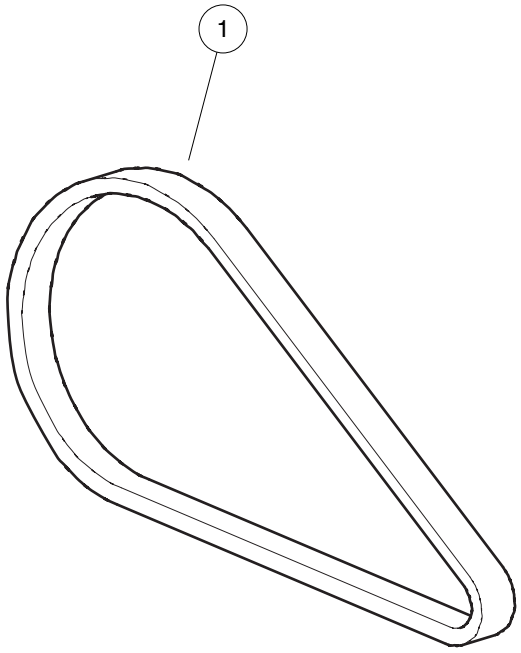

000918-001

DRIVE BELT – PEDAL-START VEHICLES WITH EFI

ITEM	PART NO.	DESCRIPTION	QTY
		1 2 3 4	
1	105245801	Belt, Drive, Pedal-Start	1

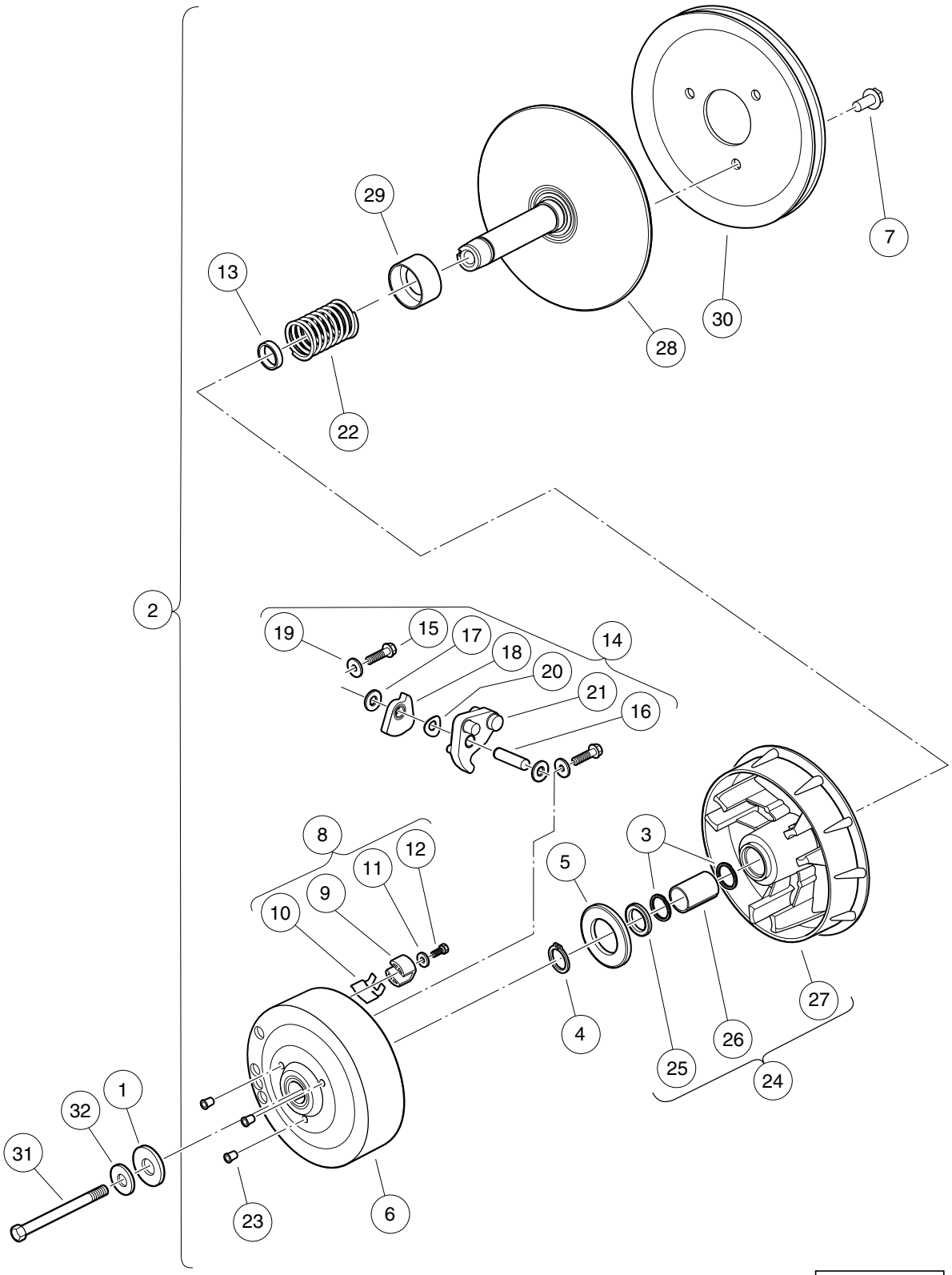
29
13
7
30
28
22
2
19
15
17
18
14
20
21
16
8
12
11
9
10
3
5
4
27
26
25
24
1
32
31
23
6
000958-002

DRIVE CLUTCH – KEY-START VEHICLES

ITEM	PART NO.	DESCRIPTION	QTY
		1 2 3 4	
1	102491501	Washer, Hard, M10	1
2	103973902	Clutch, Drive, Key-Start (includes items 3 through 30)	1
3	1014056	Ring, Spiral Backup	2
4	1014057	Ring, 0.810" Internal Retaining	1
5	1014058	Thrust Washer	1
6	1014059	Drive Hub Assy, Drive Clutch	1
7	1014288	Screw, 5/16-18 X 0.75, Thread-Forming	3
8	1014453	Kit, Drive Clutch Button (includes items 9 through 12)	1
9	1014062	Driver, Drive Clutch	3
10	1014287	Spring, Drive Button	3
11	183	Washer, #10, Type A, Flat	3
12	8450	Screw, #10-24 X 0.50, Hex-Head	3
13	1016289	Spacer, Fixed Face Shaft	1
14	1016801	Kit, Drive Clutch Weight (includes items 15 through 21)	1
15	1014063	Screw, 1/4-20 X 1.00, Hex Head	6
16	N/A	Pin, Dowel, 0.3752 x 1.50	3
17	1014065	Washer, Flat, 0.38" ID, Delrin	6
18	N/A	Clutch Weight, Secondary	3
19	N/A	Washer	6
20	1016201	Washer, Wave	3
21	N/A	Weight, Primary	3
22	1016901	Spring, Drive Clutch	1
23	N/A	Cap Plug	3
24	103974201	Asm, Sheave, Moveable, Drive, Wr (includes items 25 through 27)	1
25	1014055	Retainer	1
26	N/A	Bushing, Split, Drive Clutch	1
27	N/A	Sheave, Moveable, Drive, Wr	1
28	103974401	Sheave, Fixed, Drive, Wr	1
29	103984601	Spacer, Idler, Drive	1
30	105096101	Pulley, 7.3 Inch Effective Dia	1
31	103976101	Screw, 3/8-24x5.75, Patch	1
32	334	Washer, 3/8, Type A, Flat	1

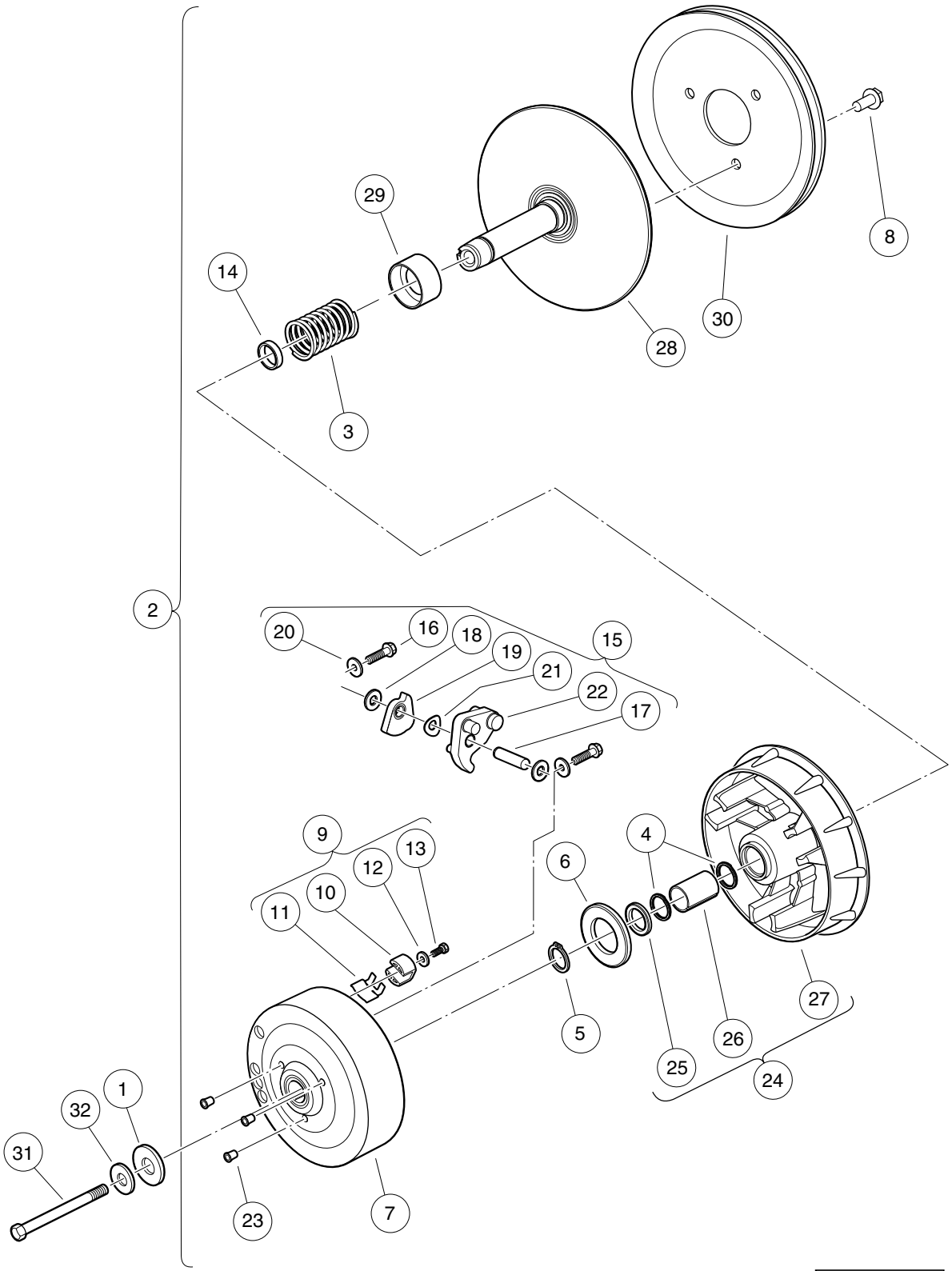
29
14
8
30
28
3
2
20
16
18
19
15
21
22
17
9
13
12
10
11
6
4
27
5
26
25
24
1
32
31
23
7
000958-001

DRIVE CLUTCH – PEDAL-START VEHICLES

ITEM	PART NO.	DESCRIPTION	QTY
		1 2 3 4	
1	102491501	Washer, Hard, M10	1
2	103973901	Clutch, Drive, Pedal-Start (includes items 3 through 30)	1
3	1014051	Spring, Drive Clutch	1
4	1014056	Ring, Spiral Backup	2
5	1014057	Ring, 0.810" Internal Retaining	1
6	1014058	Thrust Washer	1
7	1014059	Drive Hub Assy, Drive Clutch	1
8	1014288	Screw, 5/16-18 X 0.75, Thread-Forming	3
9	1014453	Kit, Drive Clutch Button (includes items 10 through 13)	1
10	1014062	Driver, Drive Clutch	3
11	1014287	Spring, Drive Button	3
12	183	Washer, #10, Type A, Flat	3
13	8450	Screw, #10-24 X 0.50, Hex-Head	3
14	1016289	Spacer, Fixed Face Shaft	1
15	1016801	Kit, Drive Clutch Weight (includes items 16 through 22)	1
16	1014063	Screw, 1/4-20 X 1.00, Hex Head	6
17	N/A	Pin, Dowel, 0.3752 x 1.50	3
18	1014065	Washer, Flat, 0.38" ID, Delrin	6
19	N/A	Clutch Weight, Secondary	3
20	N/A	Washer	6
21	1016201	Washer, Wave	3
22	N/A	Weight, Primary	3
23	N/A	Cap Plug	3
24	103974201	Asm, Sheave, Moveable, Drive, Wr (includes items 25 through 27)	1
25	1014055	Retainer	1
26	N/A	Bushing, Split, Drive Clutch	1
27	N/A	Sheave, Moveable, Drive, Wr	1
28	103974401	Sheave, Fixed, Drive, Wr	1
29	103984601	Spacer, Idler, Drive	1
30	105096101	Pulley, 7.3 Inch Effective Dia	1
31	103976101	Screw, 3/8-24x5.75, Patch	1
32	334	Washer, 3/8, Type A, Flat	1

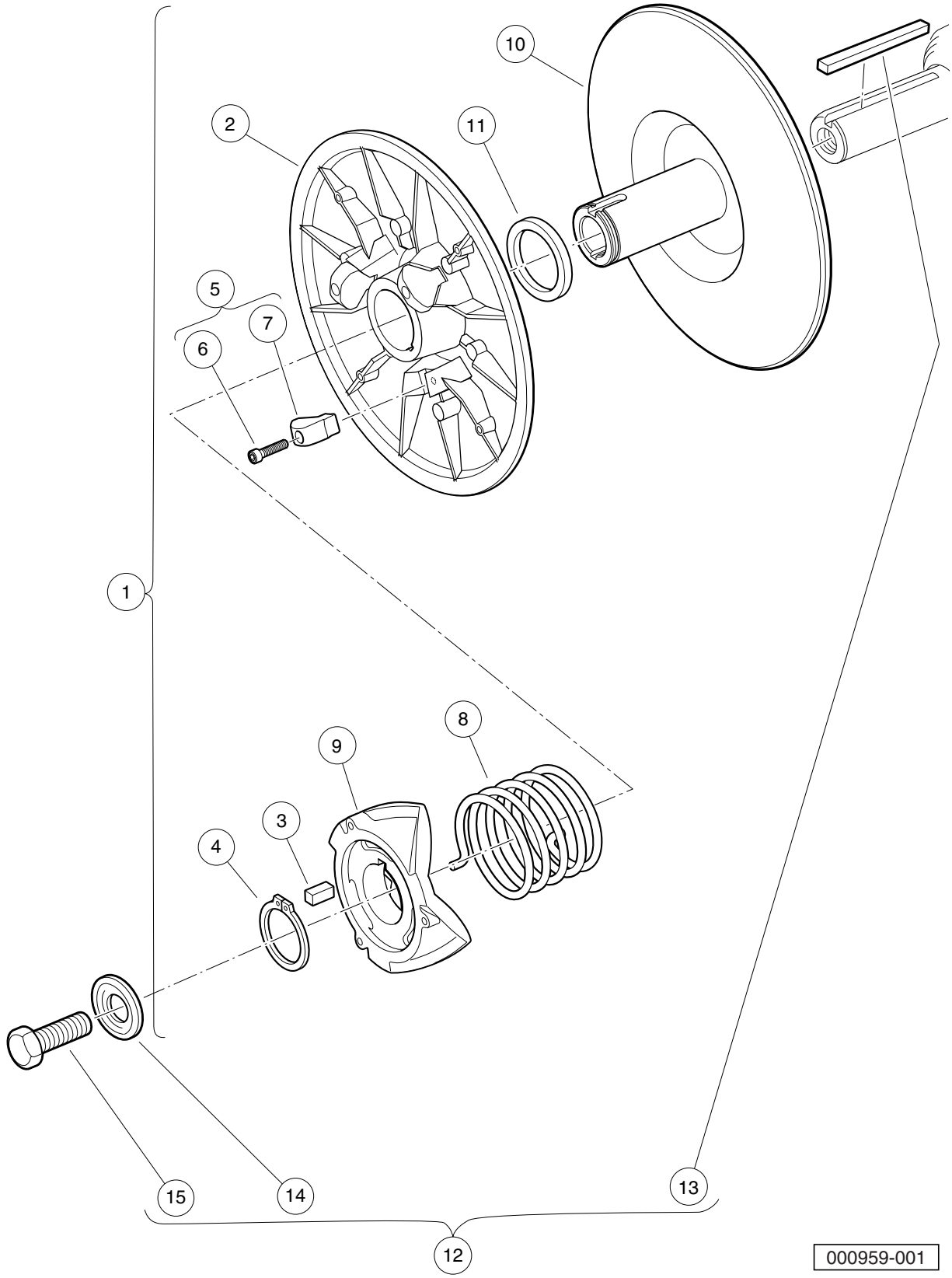
10
2
11
5
7
6
1
8
9
3
4
15
14
13
12
000959-001

DRIVEN CLUTCH (STANDARD SPEED) – KEY START AND PEDAL START

ITEM	PART NO.	DESCRIPTION	QTY
		1 2 3 4	
1	103974002	Clutch, Driven, Std-Speed, Key and Pedal Start (includes items 2 through 11)	1
2	1014072	Movable-Face Assembly with Bushing	1
3	1014078	Key, Driven Clutch	1
4	1014080	Ring, Retaining	1
5	1014454	Kit, Driven Clutch Button (includes items 6 and 7)	1
6	1012836	Screw, #8-32 X 3/4, Socket-Head Cap	3
7	N/A	Button, Drive	3
8	1017145	Spring, Driven Clutch, 55 Degree	1
9	1017686	Cam, Driven Clutch	1
10	103975301	Sheave, Fixed, Driven, Wr	1
11	104025101	Washer, Acetal, Driven Clutch	1
12	AM10419	Kit, Clutch Repair (includes items 13 through 15)	1
13	101833401	Key, 3/16 Sq X 1.50"	1
14	102155801	Washer, Driven Clutch	1
15	102242101	Screw, 5/16-18 X 3/4 Hex-Head with Patch	1

TRANSAXLE (FUJI ED65)

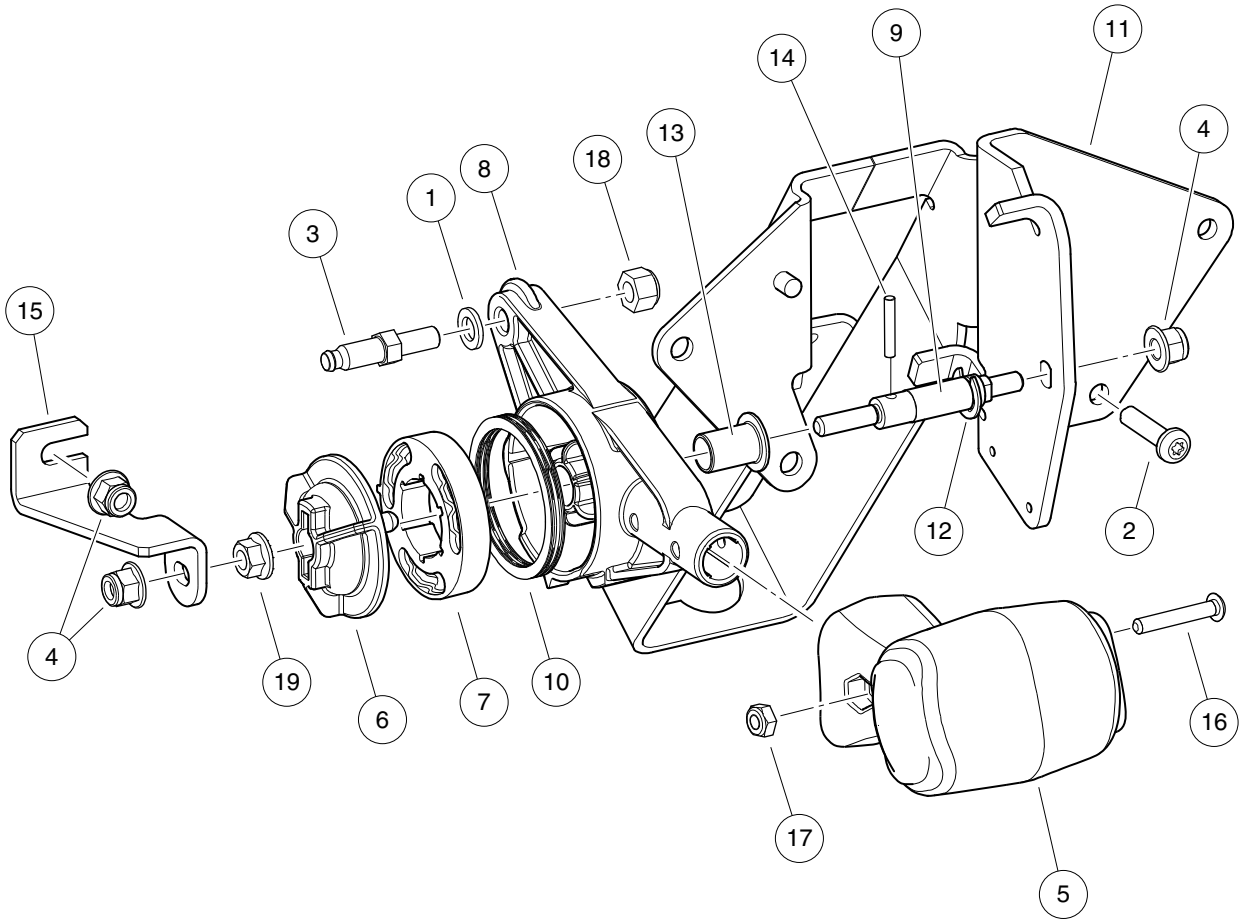

000987-001

FORWARD/REVERSE SHIFTER ASSEMBLY

ITEM	PART NO.	DESCRIPTION	QTY
		1 2 3 4	
1	1014007	Washer, 1/4, Flat	1
2	102296020	Screw, Torx Pan Hd Pt, M6 X 20	4
3	102526201	Stud, Thread, 1/4-28	1
4	102621501	Nut, Flange, M6 X 1.0, Nylon	3
5	105036301	Shifter, Soft, Gas, CA300-700	1
6	105037701	Follower, FNR Detent	1
7	105038001	Cam, FNR Detent, Alternate	1
8	105038101	Housing, FNR, Gas, CA300-700	1
9	105038201	Shaft, FNR, Dash	1
10	105038501	Spring, Wave, Gas FNR Shifter	1
11	105039401	Bracket, Shifter, Dash Mount	1
12	105039801	E-Clip, External, 8mm Groove	1
13	105039901	Bushing, Dash Shifter, Gas	1
14	105040401	Pin, Round, 0.125 Dia x 0.625	1
15	105040501	Bracket, Shifter, Brace, Dash	1
16	105083701	Bolt, 10-24 X 1.25", But Head	1
17	105083801	Nut, Nylon Lock, #10-24, Blk	1
18	8717	Locknut, Nylon Insert, 1/4-28	1
19	96704176	Nut, Flanged, M6 X 1, Serrated	1

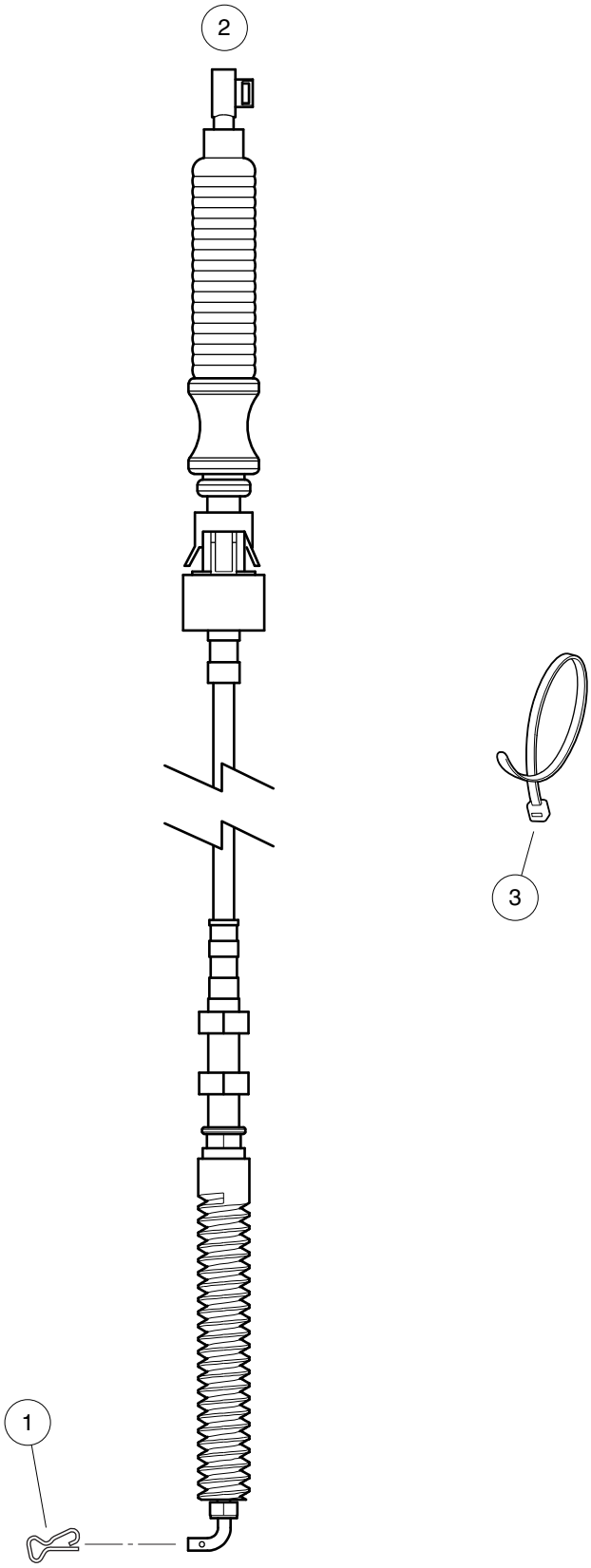
2
3
1
000988-001

SHIFTER CABLE – CA500 & CA550

ITEM	PART NO.	DESCRIPTION	QTY
		1 2 3 4	
1	103886601	Clip, Bowtie	1
2	105038803	Cable, Shifter, CA500/550/CafÈ Express	1
3	8990	Tie Wrap, 8" Nylon	A/R

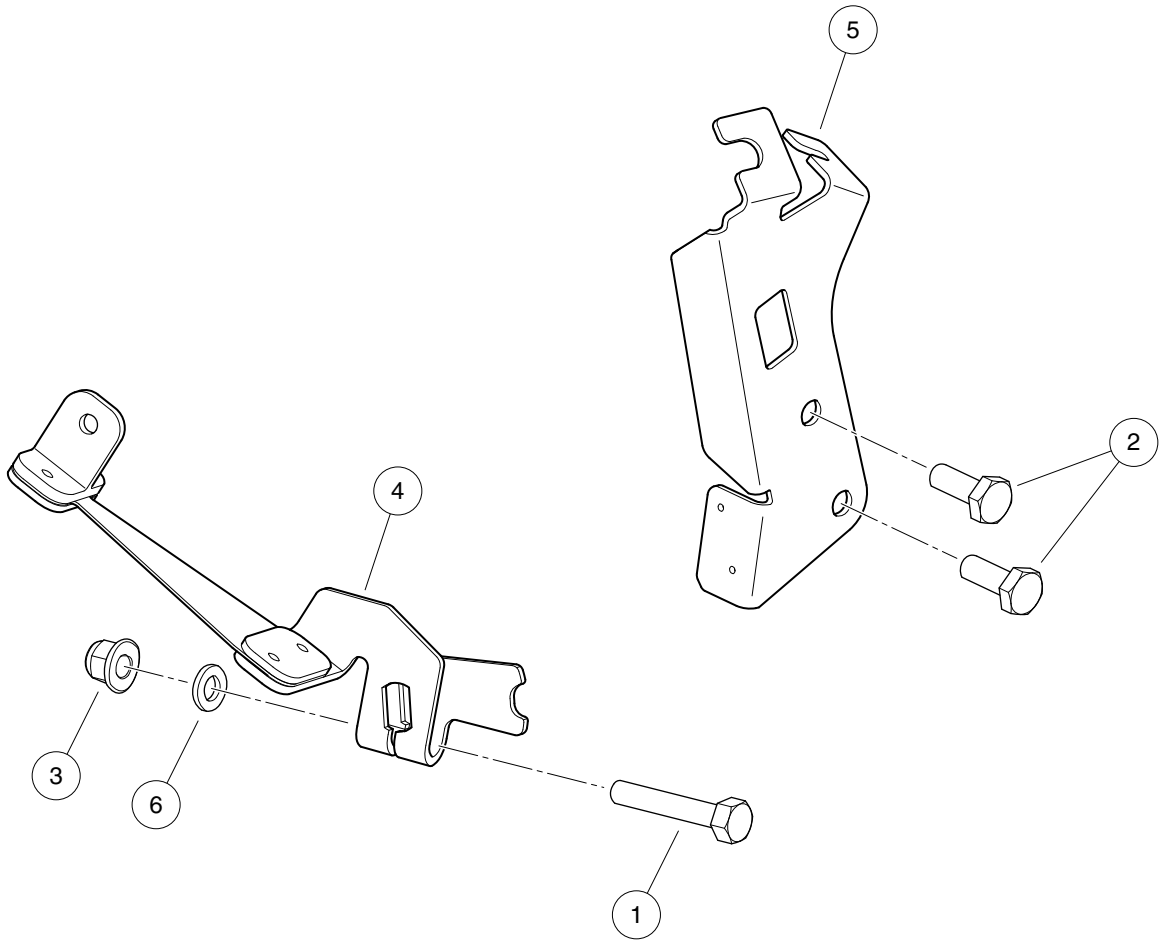

000965-001

SHIFT LEVER AND BRACKET – PEDAL-START ENGINES

ITEM	PART NO.	DESCRIPTION	QTY
		1 2 3 4	
1	102059501	Screw, 6M-1.00 X 35mm, Hex Head	1
2	102498201	Bolt, M10 X 1.25 X 25, Loctite	2
3	102621501	Nut, Flange, M6 X 1.0, Nylon	1
4	105040901	Lever, Shift, Flex, Transaxle, Pedal-Start	1
5	105135101	Bracket, Cable, FNR/Accelerator, ED65	1
6	96705199	Washer, M6	1

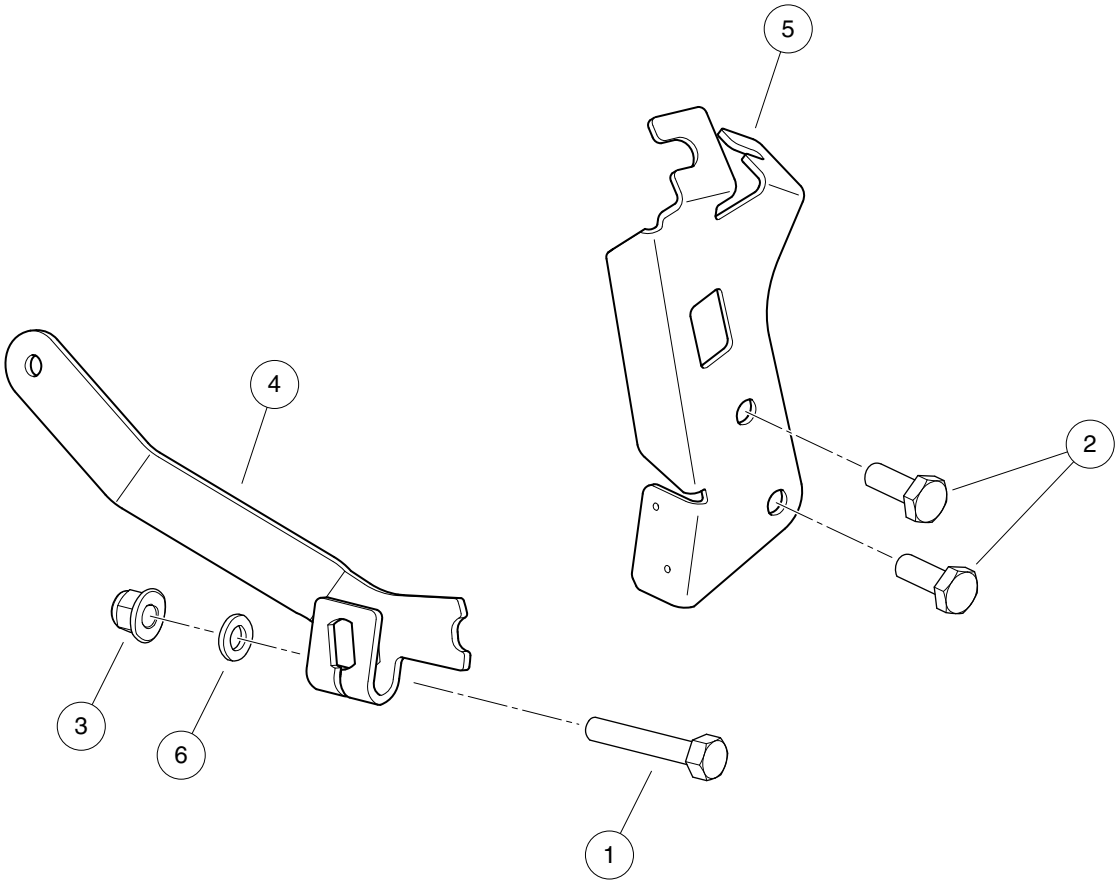

000965-002

SHIFT LEVER AND BRACKET – KEY-START ENGINES

ITEM	PART NO.	DESCRIPTION	QTY
		1 2 3 4	
1	102059501	Screw, 6M-1.00 X 35mm, Hex Head	1
2	102498201	Bolt, M10 X 1.25 X 25, Loctite	2
3	102621501	Nut, Flange, M6 X 1.0, Nylon	1
4	105134901	Lever, Shift, Transaxle, Key-Start	1
5	105135101	Bracket, Cable, FNR/Accelerator, ED65	1
6	96705199	Washer, M6	1

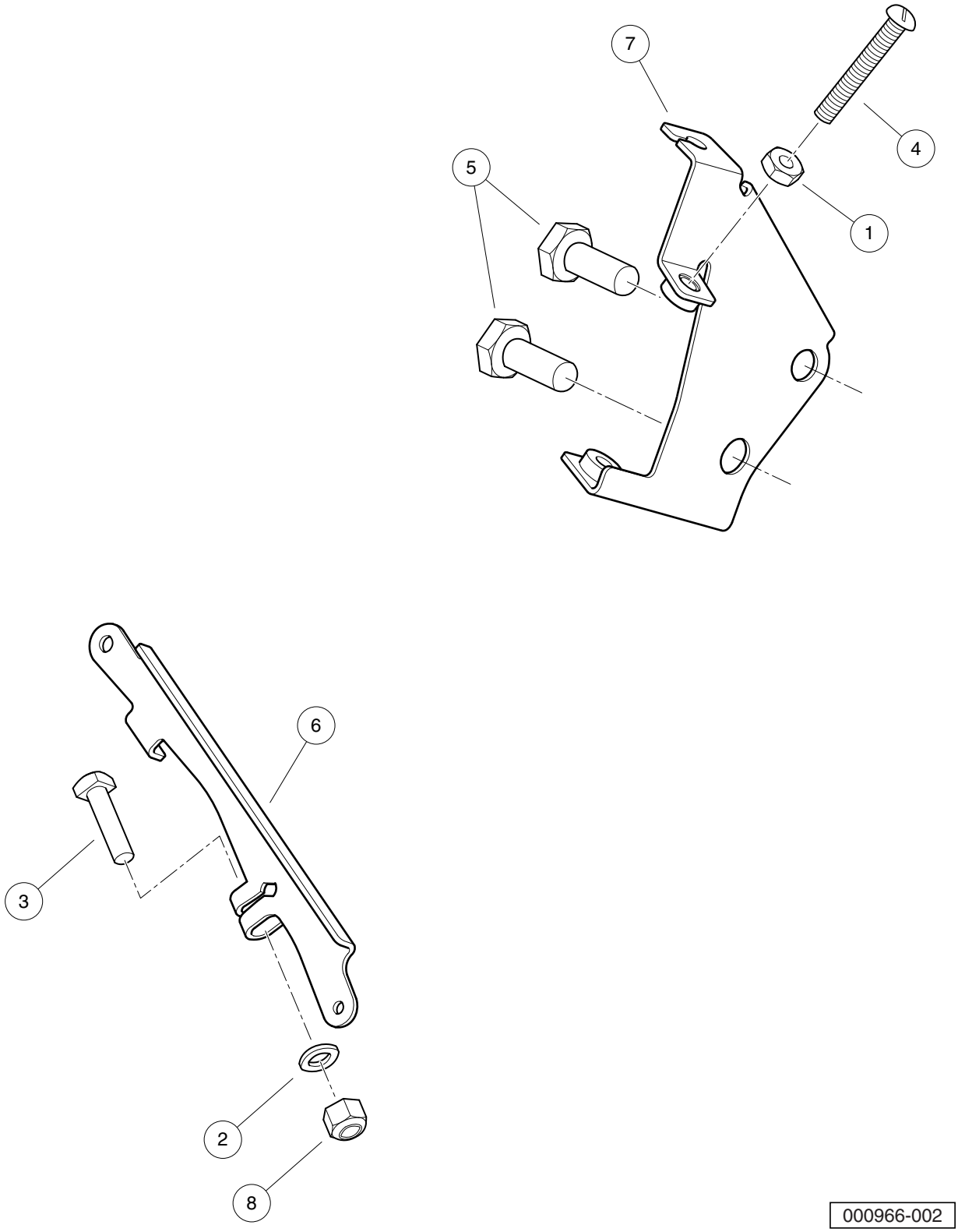

000966-002

GOVERNOR ARM AND BRACKETS – UTILITY VEHICLES

ITEM	PART NO.	DESCRIPTION	QTY
		1 2 3 4	
1	1011114	Nut, M6-1.00 Hex	1
2	1014007	Washer, 1/4, Flat	1
3	101886101	Screw, 1/4-20 X 1.00, Square-Head	1
4	102476401	Bolt, Stop, Pedal	1
5	102498201	Bolt, M10 X 1.25 X 25, Loctite	2
6	104023501	Arm, Governor, ED65	1
7	105144401	Weldment, Governor Bracket	1
8	8233	Locknut, 1/4-20, Nylon Insert	1

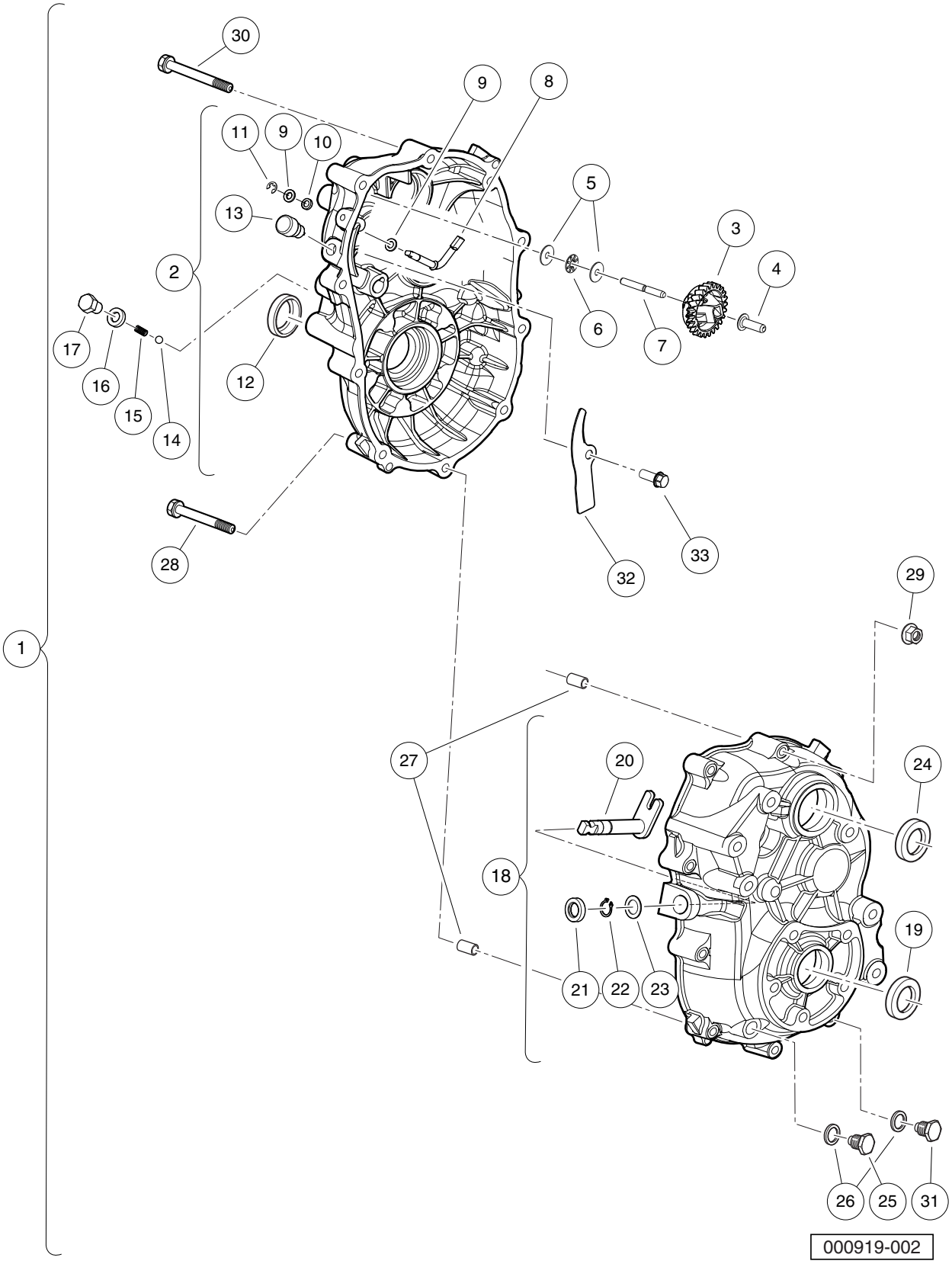
30
9
8
11
9
10
5
13
3
4
2
6
7
17
12
16
15
14
28
32
33
29
1
27
20
24
18
19
21
22
23
26
25
31
000919-002

TRANSAXLE (ED65), LIMITED SLIP – PAGE 1 OF 3

ITEM	PART NO.	DESCRIPTION	QTY
		1 2 3 4	
1	103879702	Transaxle, ED65, Limited-Slip Differential (includes items 2 through 33)	1
2	105025001	Case, Transaxle, Left, Complete, ED65 (includes items 3 through 13)	1
3	105025101	Gear, Governor, Complete, ED65	1
4	105025201	Sleeve, Governor, ED65	1
5	105025301	Washer, ED65	2
6	105025401	Bearing, Thrust, ED65	1
7	105025501	Shaft, Governor Gear, ED65	1
8	105025601	Shaft, Governor, ED65	1
9	105025701	Washer, 6mm, ED65	2
10	105025801	Seal, Oil, 6x10x2.5, ED65	1
11	105025901	Retaining Ring, E5, ED65	1
12	105026001	Seal, Oil, 24x40x9, ED65	1
13	105027101	Vent, Breather, ED65	1
14	105026101	Ball, Steel, ED65	1
15	105026201	Spring, ED65	1
16	105026301	Gasket, 10, ED65	1
17	105026401	Bolt, M10-1.25x12mm Lg, ED65	1
18	105026501	Case, Transaxle, Right, Complete, ED65 (includes items 19 through 24)	1
19	105026001	Seal, Oil, 24x40x9, ED65	1
20	105026601	Shaft, Select, ED65	1
21	105026701	Seal, Oil, 13x22x5, ED65	1
22	105026801	Snap Ring, 13mm, ED65	1
23	105026901	Spacer, 13x1, ED65	1
24	105027001	Seal, Oil, 25x45x7, ED65	1
25	105027201	Plug, Oil Drain, ED65	1
26	105027301	Gasket, 14, ED65	2
27	105028301	Pin, Guide, ED65	2
28	105028501	Bolt, Flange, M8-1.25x65mm, ED65	1
29	105030001	Nut, Flange, M8-1.25, ED65	10
30	105030701	Bolt, Flanged, M8-1.25x80mm, ED65	9
31	105063501	Plug, Oil Drain, Magnetic, ED65	1
32	105234801	Plate, Ed65 Splash	1
33	105234901	Bolt, M6-1 X 12mm Lg, Ed65	1

Note: Fuji transaxle component listings span three pages. To identify your transaxle, locate the serial number decal on the axle tube.

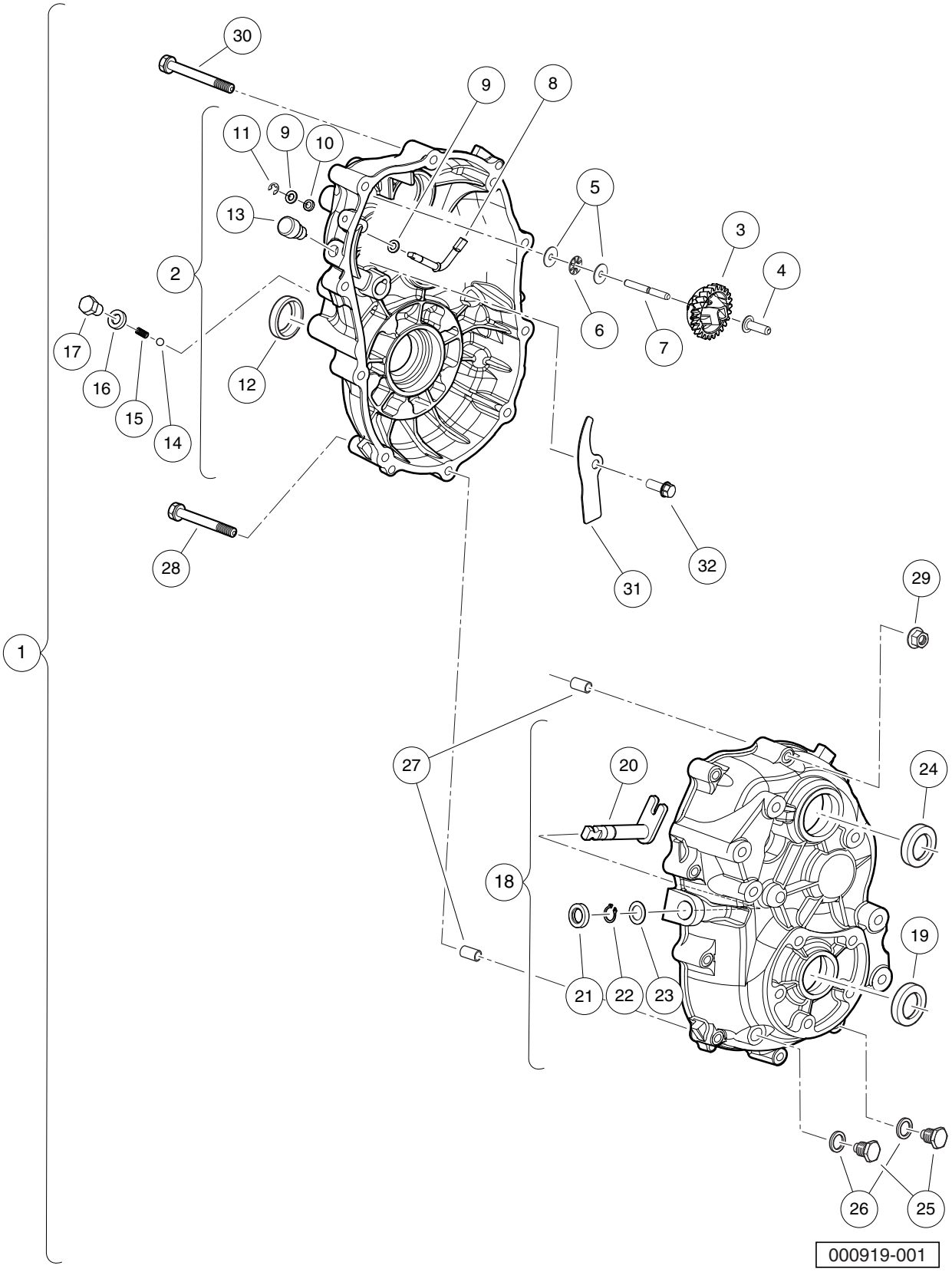
30
9
8
11
9
10
5
13
3
4
2
6
7
17
12
16
15
14
28
31
32
29
1
27
20
24
18
19
21
22
23
26
25
000919-001

TRANSAXLE (ED65), OPEN – PAGE 1 OF 3

ITEM	PART NO.	DESCRIPTION	QTY
		1 2 3 4	
1	103879701	Transaxle, ED65, Open Differential (includes items 2 through 32)	1
2	105025001	Case, Transaxle, Left, Complete, ED65 (includes items 3 through 13)	1
3	105025101	Gear, Governor, Complete, ED65	1
4	105025201	Sleeve, Governor, ED65	1
5	105025301	Washer, ED65	2
6	105025401	Bearing, Thrust, ED65	1
7	105025501	Shaft, Governor Gear, ED65	1
8	105025601	Shaft, Governor, ED65	1
9	105025701	Washer, 6mm, ED65	2
10	105025801	Seal, Oil, 6x10x2.5, ED65	1
11	105025901	Retaining Ring, E5, ED65	1
12	105026001	Seal, Oil, 24x40x9, ED65	1
13	105027101	Vent, Breather, ED65	1
14	105026101	Ball, Steel, ED65	1
15	105026201	Spring, ED65	1
16	105026301	Gasket, 10, ED65	1
17	105026401	Bolt, M10-1.25x12mm Lg, ED65	1
18	105026501	Case, Transaxle, Right, Complete, ED65 (includes items 19 through 24)	1
19	105026001	Seal, Oil, 24x40x9, ED65	1
20	105026601	Shaft, Select, ED65	1
21	105026701	Seal, Oil, 13x22x5, ED65	1
22	105026801	Snap Ring, 13mm, ED65	1
23	105026901	Spacer, 13x1, ED65	1
24	105027001	Seal, Oil, 25x45x7, ED65	1
25	105027201	Plug, Oil Drain, ED65	2
26	105027301	Gasket, 14, ED65	2
27	105028301	Pin, Guide, ED65	2
28	105028501	Bolt, Flange, M8-1.25x65mm, ED65	1
29	105030001	Nut, Flange, M8-1.25, ED65	10
30	105030701	Bolt, Flanged, M8-1.25x80mm, ED65	9
31	105234801	Plate, Ed65 Splash	1
32	105234901	Bolt, M6-1 X 12mm Lg, Ed65	1

Note: Fuji transaxle component listings span three pages. To identify your transaxle, locate the serial number decal on the axle tube.

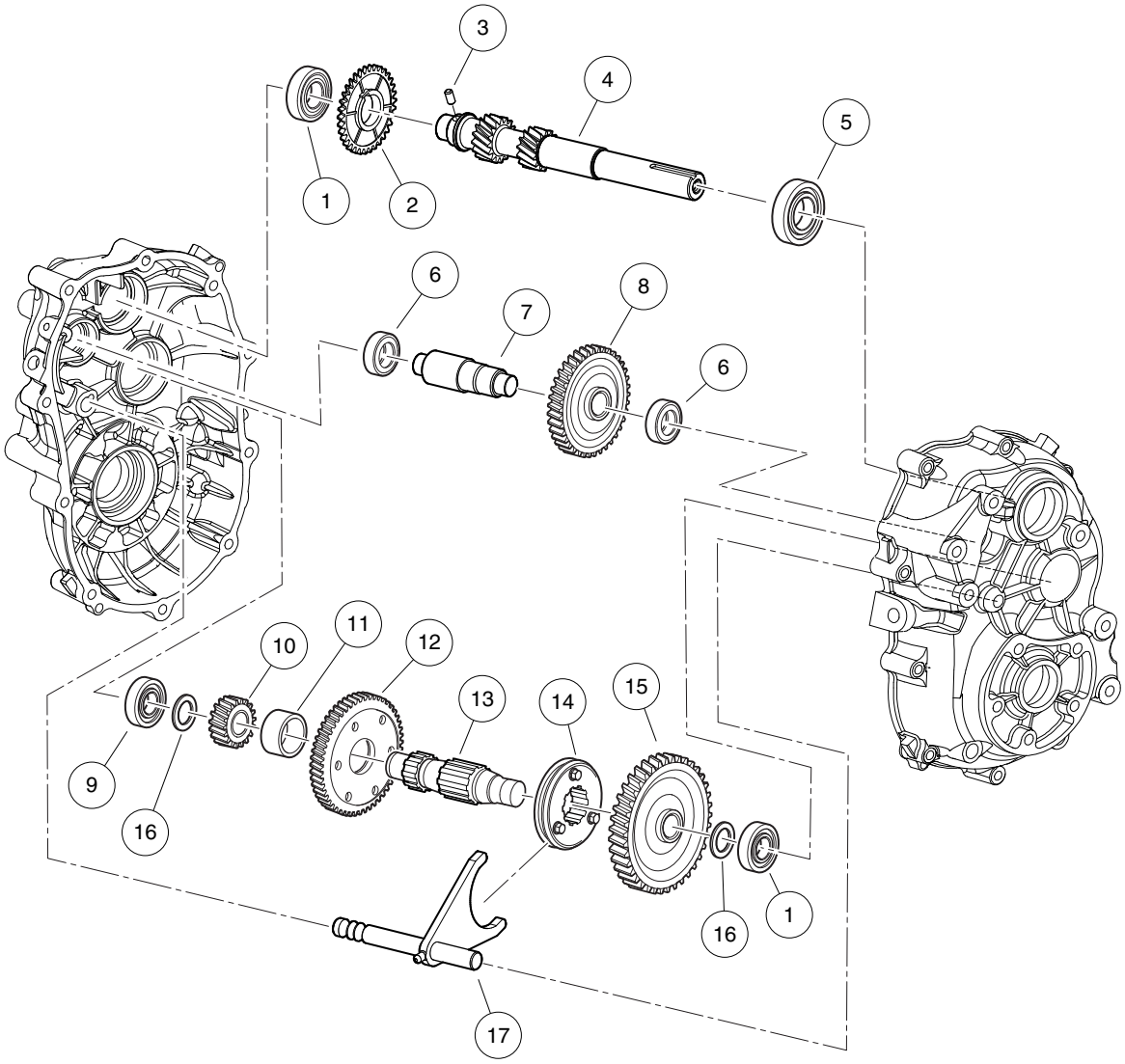

000919-003

TRANSAXLE (ED65), LIMITED SLIP AND OPEN – PAGE 2 OF 3

ITEM	PART NO.	DESCRIPTION	QTY
		1 2 3 4	
1	105027401	Bearing, Ball (6204)	2
2	105027501	Gear, Governor, 34 Tooth, ED65	1
3	105027601	Pin, 6x12 Long, ED65	1
4	105027701	Shaft, Input, ED65	1
5	105027801	Bearing, Ball (6205 seal)	1
6	105027901	Bearing, Ball (6202)	2
7	105028001	Shaft, Counter, ED65	1
8	105028201	Gear, 34 Tooth, ED65	1
9	105028401	Bearing, Ball (6304)	1
10	105028601	Gear, 17 Tooth, ED65	1
11	105028701	Collar, 24 x 12, ED65	1
12	105028801	Gear, 52 Tooth, ED65	1
13	105028901	Shaft, Center, ED65	1
14	105029001	Clutch, Pin, ED65	1
15	105029101	Gear, 62 Tooth, ED65	1
16	105029201	Spacer, 20x2, ED65	2
17	105030901	Shaft, Shift, ED65	1
		Note: To identify your transaxle, locate the serial number decal on the axle tube.	

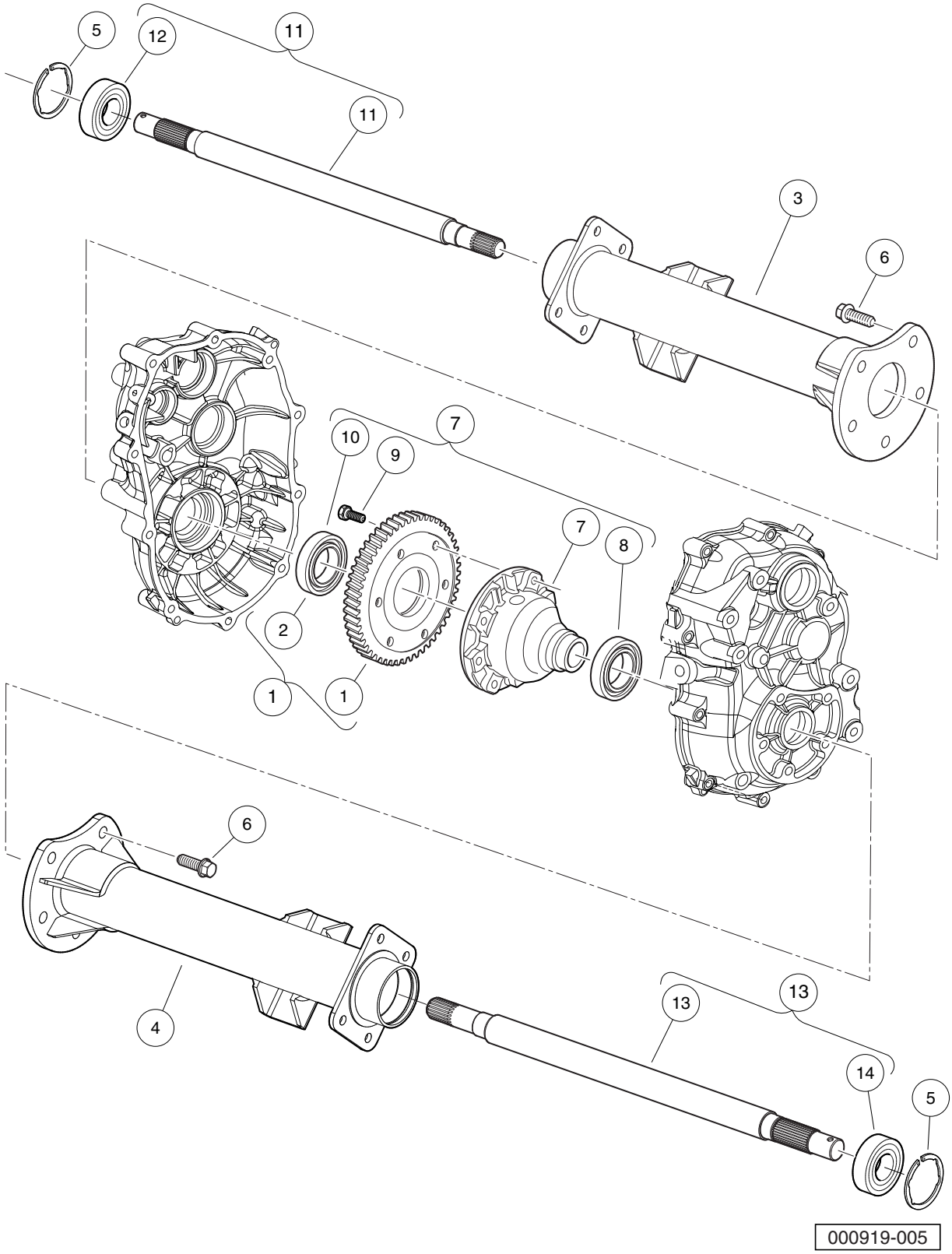
5
12
11
11
3
6
10
9
7
7
8
2
1
1
6
4
13
13
14
5
000919-005

TRANSAXLE (ED65), LIMITED SLIP – PAGE 3 OF 3

ITEM	PART NO.	DESCRIPTION	QTY
		1 2 3 4	
1	105029901	Gear, 60 Tooth, Complete, ED65 (includes item 2)	1
2	105029801	Bearing, Ball (6007)	1
3	105030401	Axle Tube, Driver-Side, ED65	1
4	105030501	Axle Tube, Passenger-Side, ED65	1
5	105030601	Snap Ring, 52mm, ED65	2
6	105030801	Bolt, Flange, M10-1.25x25, ED65	10
7	105063601	Differential, Limited-Slip, ED65 (includes items 8 through 10)	1
8	105028101	Bearing, Ball (6006)	1
9	105029501	Bolt, M10-1.25x26mm Lg, ED65	6
10	105029801	Bearing, Ball (6007)	1
11	105066001	Axle Shaft, Driver-Side, Complete, ED65 (includes item 12)	1
12	105030301	Bearing, Ball (6205DD)	1
13	105066101	Axle Shaft, Passenger-Side, Complete, ED65 (includes item 14)	1
14	105030301	Bearing, Ball (6205DD)	1

Note: To identify your transaxle, locate the serial number decal on the axle tube.

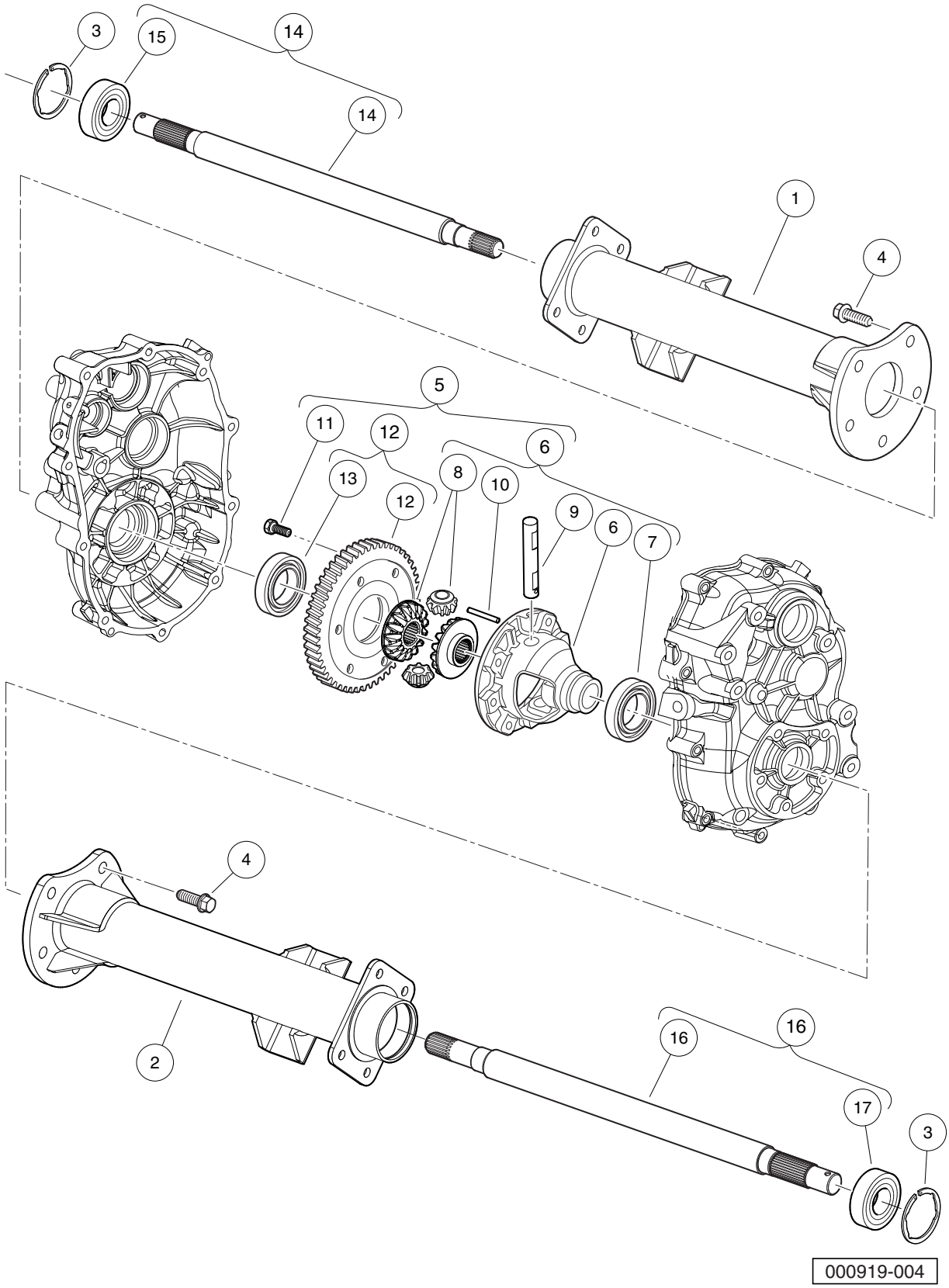
3
15
14
14
1
4
5
11
12
6
13
8
10
12
9
6
7
4
2
16
16
17
3
000919-004

TRANSAXLE (ED65), OPEN – PAGE 3 OF 3

ITEM	PART NO.	DESCRIPTION	QTY
		1 2 3 4	
1	105030401	Axle Tube, Driver-Side, ED65	1
2	105030501	Axle Tube, Passenger-Side, ED65	1
3	105030601	Snap Ring, 52mm, ED65	2
4	105030801	Bolt, Flange, M10-1.25x25, ED65	10
5	105031001	Differential, Open, ED65 (includes items 6 through 12)	1
6	105029301	Case, Differential, Complete, ED65 (includes items 7 through 10)	1
7	105028101	Bearing, Ball (6006)	1
8	105029401	Gear Set, Differential, ED65	1
9	105029601	Shaft, Differential, ED65	1
10	105029701	Pin, 4x40 Long, ED65	1
11	105029501	Bolt, M10-1.25x26mm Lg, ED65	6
12	105029901	Gear, 60 Tooth, Complete, ED65 (includes item 13)	1
13	105029801	Bearing, Ball (6007)	1
14	105066001	Axle Shaft, Driver-Side, Complete, ED65 (includes item 15)	1
15	105030301	Bearing, Ball (6205DD)	1
16	105066101	Axle Shaft, Passenger-Side, Complete, ED65 (includes item 17)	1
17	105030301	Bearing, Ball (6205DD)	1

Note: To identify your transaxle, locate the serial number decal on the axle tube.

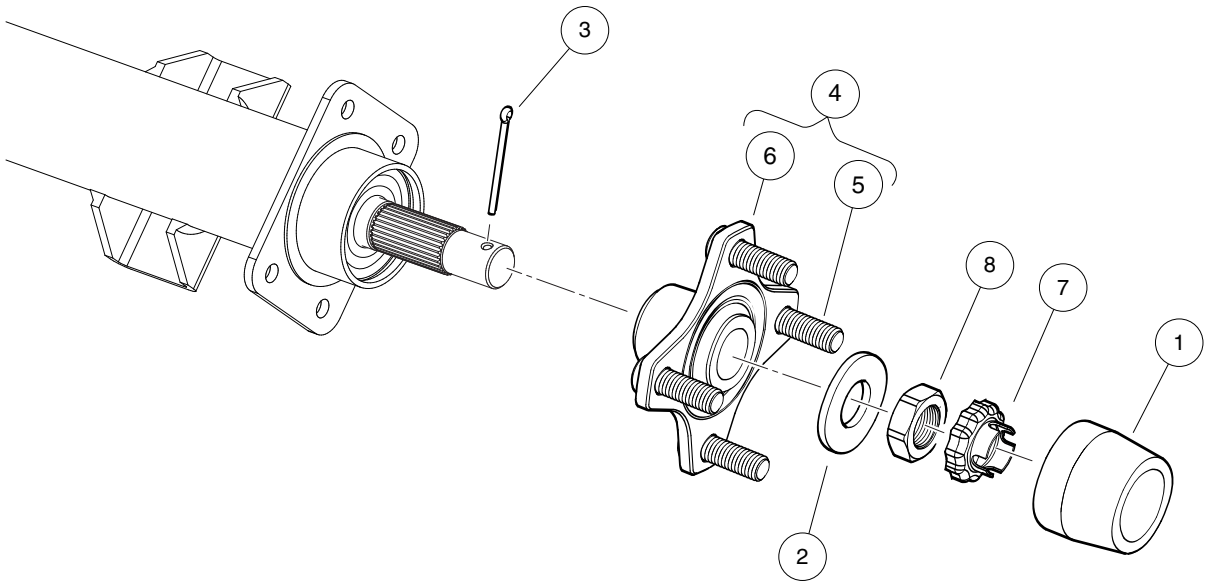

000919-006

HUB, REAR

ITEM	PART NO.	DESCRIPTION	QTY
		1 2 3 4	
1	102274101	Center Cap, Rubber	2
2	102617801	Washer, Hard, M22	2
3	103989501	Pin, Cotter, 9/64 X 1.75"	2
4	103995001	Asm, Hub, Machined, Golf/Utility (includes items 5 and 6)	2
5	103951501	Lug Stud, 1/2-20 UNF, SAE J1102	4
6	103979301	Hub, Machined, Golf/Utility	1
7	104021701	Retaining Ring, Hex Nut, M22	2
8	104027101	Nut, Hex, M22x1.5, Thin	2

12

G

ELECTRICAL SYSTEM – ELECTRIC VEHICLES

13

E

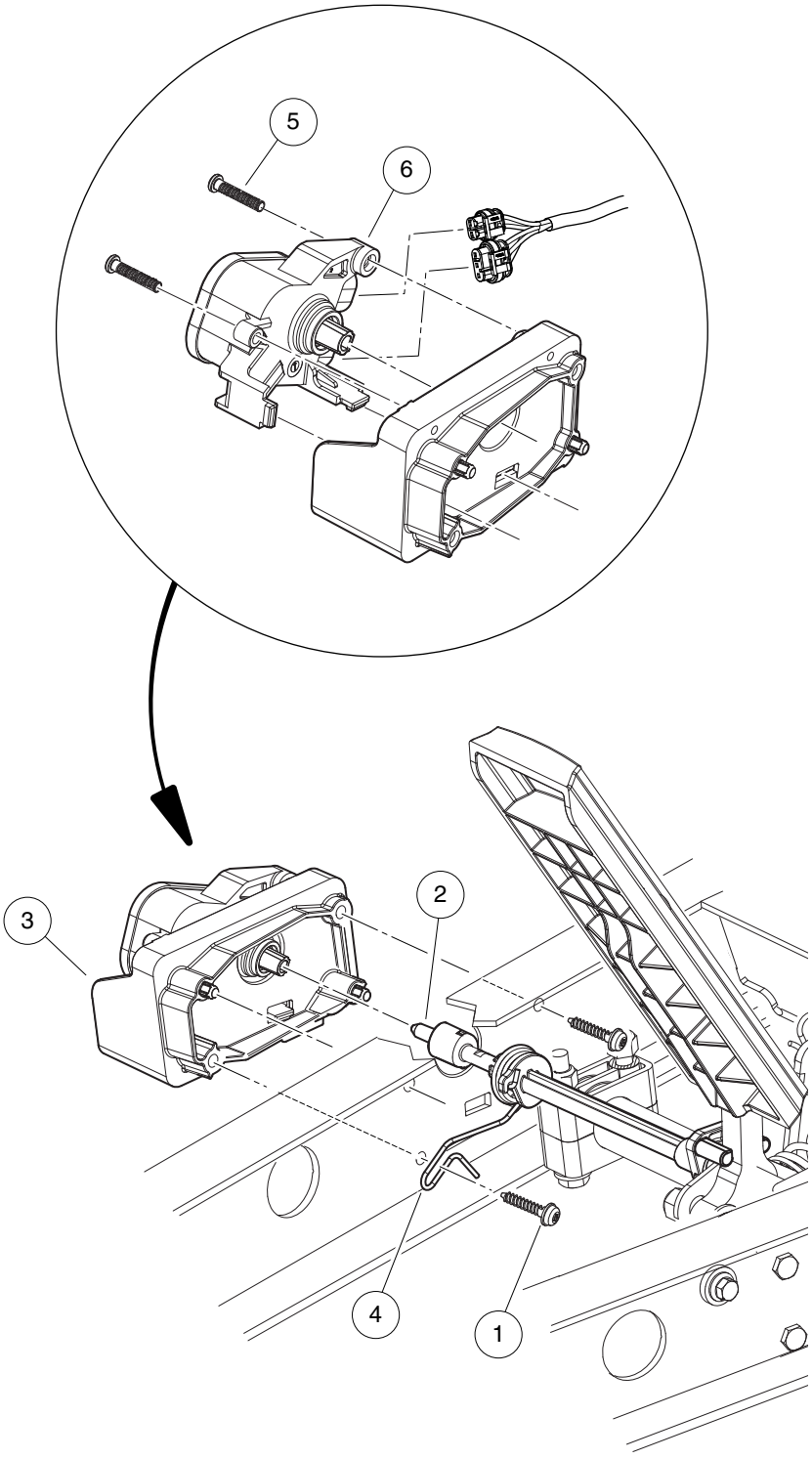

002522-001

MOTOR CONTROLLER OUTPUT REGULATOR (MCOR)

ITEM	PART NO.	DESCRIPTION	QTY
		1 2 3 4	
1	102297230	Screw, M6, Torx, Interlock Thread	2
2	103902101	Bar, Drive, Cast	1
3	103902301	Housing, Mcor	1
4	103902401	Spring, Torsion	1
5	103943401	Screw, Pan, #10 X 1.00 Hi-lo	2
6	105116301	MCOR4, Type 16 Switch	1

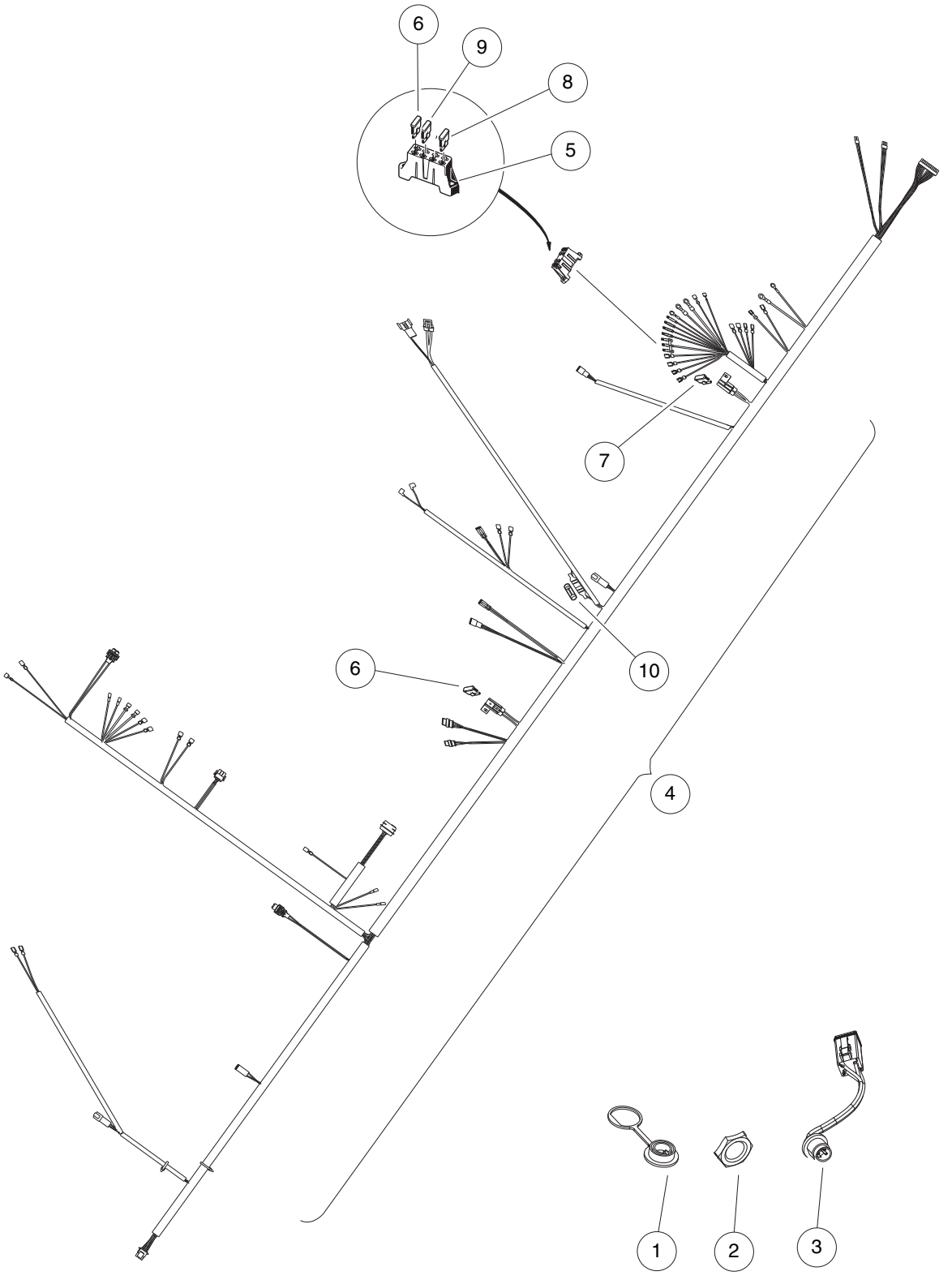
6
9
8
5
7
10
6
4
1
2
3
002533-002

MAIN WIRING HARNESS, 48-VOLT FUSE BLOCK – ELECTRIC VEHICLE

ITEM	PART NO.	DESCRIPTION	QTY
		1 2 3 4	
1	102196901	Dust Cap	1
2	102572401	Nut, Diagnostic Port, Prec	1
3	103218601	Harness, Diagnostic Port	1
4	105049601	Asm, Harness, Ca500, Elec (includes items 5 through 10)	1
5	1015741	Fuse Block	1
6	1016423	Fuse, 20-Amp	2
7	102492301	Fuse, 30-Amp	1
8	102538601	15 Amp Fuse	2
9	105167201	Fuse, Atc, 2 Amp	1
10	105173901	Fuse, Agc, 1 Amp	1

13

E

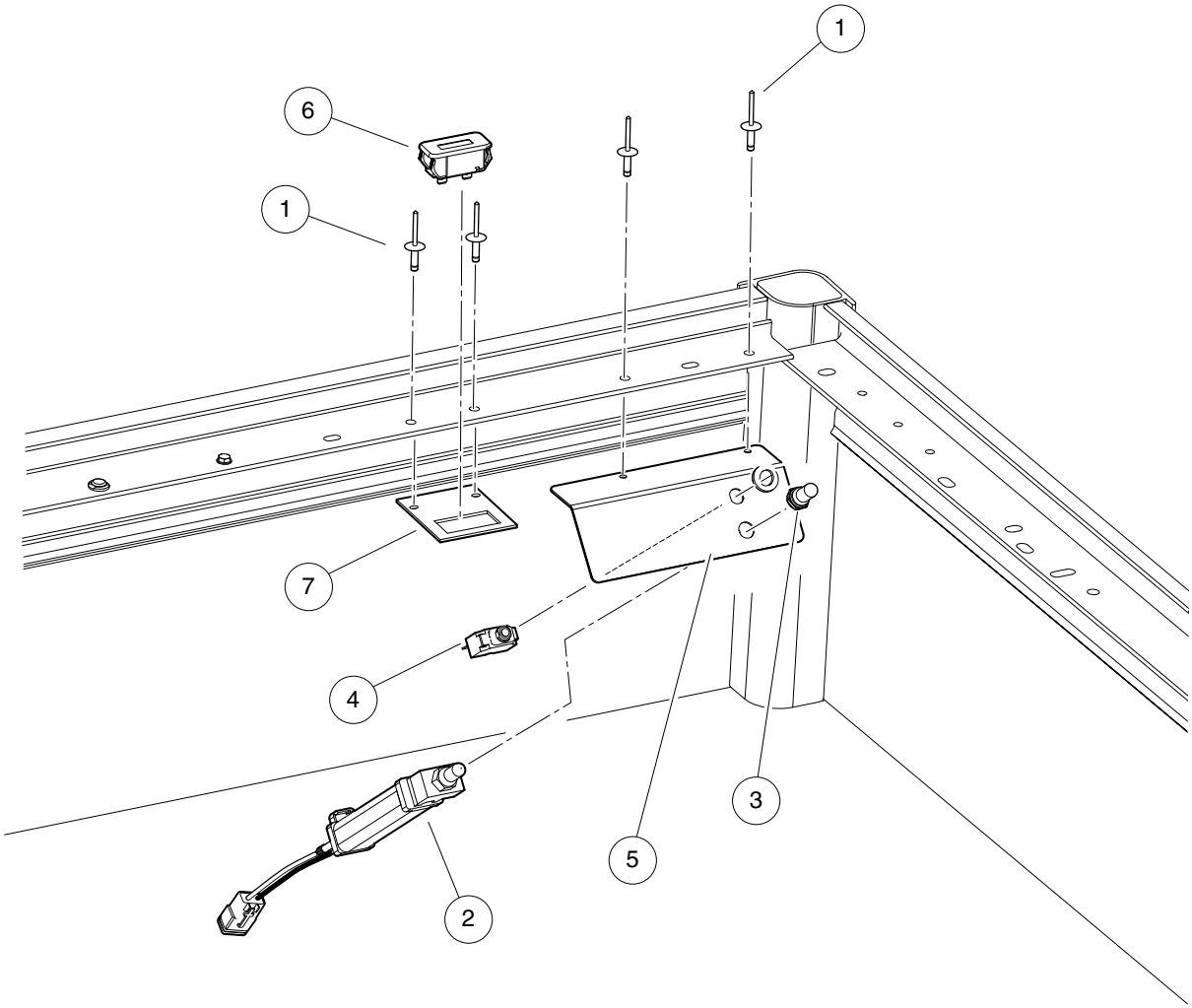

002520-002

TOW/RUN SWITCH AND HOUR METER

ITEM	PART NO.	DESCRIPTION	QTY
		1 2 3 4	
1	1015392	Rivet, 3/16 Pop	4
2	101908101	Switch Assembly, Tow/Run	1
3	101908401	Boot, Switch	1
4	102838101	Circuit Breaker, 20 Amp	1
5	102915701	Plate, Switch, Run Tow, Mode	1
6	103510301	Meter, Hour	1
7	105145201	Bracket, Hour Meter Sq, Short	1

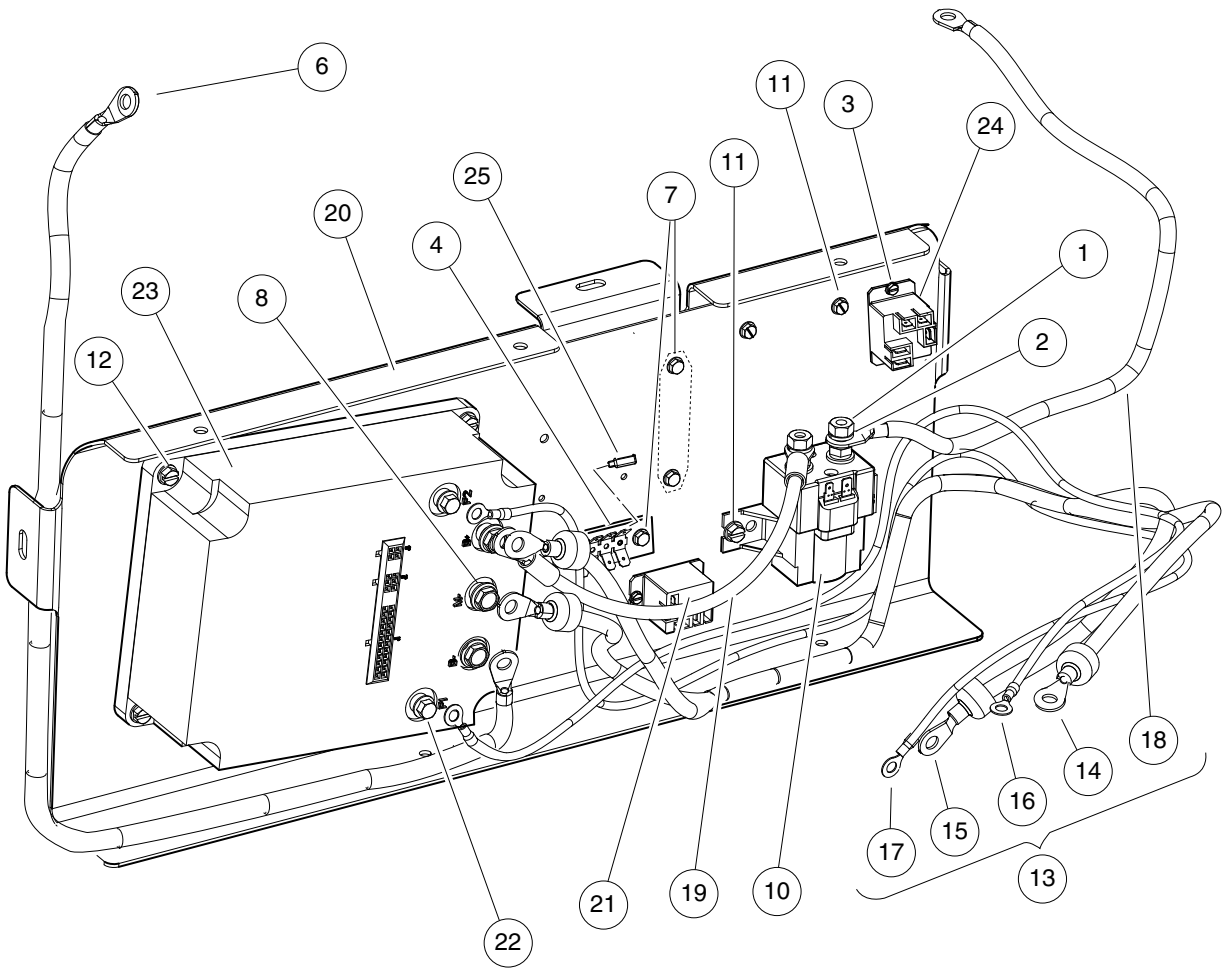

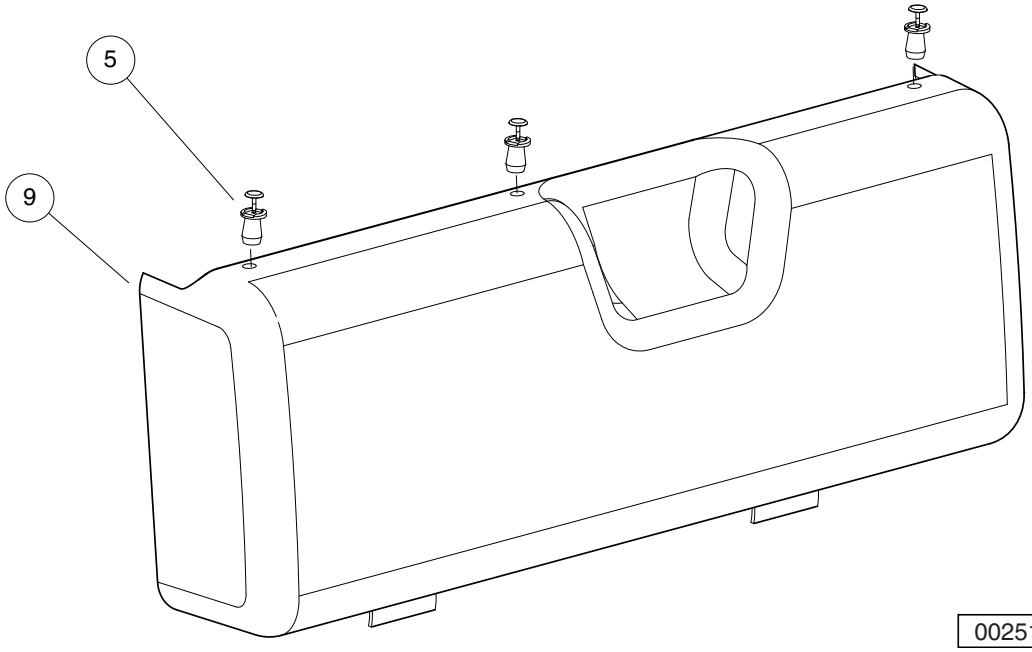

002512-001

ELECTRIC COMPONENTS – ELECTRIC VEHICLE

ITEM	PART NO.	DESCRIPTION	QTY
		1 2 3 4	
1	1012528	Nut, M8-1.25 Hex	2
2	1013734	Lockwasher, 8mm Split	2
3	1015720	Screw, #6-32 X 1/2 Hex Washer-Head	4
4	1016356	Terminal Block with Insulator	1
5	1016967	Blind Rivet, Push Type	3
6	102002802	Wire Assy, #4 Black, 33 In	1
7	102238001	#10-24 Taptite Screw	4
8	102240501	Bolt, Controller, Terminal	3
9	102772402	Cover, Electrical Component, Carryall 6	1
10	102774701	Solenoid, 48v	1
11	102817101	Screw, 1/4-20 X .50 Hex Wsh Hd	5
12	102817201	Screw, 1/4-20 X .88 Hex Wsh Hd	4
13	102845401	Wire Harness, Power, IQ Plus (includes items 14 through 18)	1
14	N/A	Asm, #4 Grn Wire, 37"	1
15	N/A	Asm, #4 Wht Wire, 36.5"	1
16	N/A	Asm, #10 Org Wire, 39"	1
17	N/A	Asm, #10 Blu Wire, 46"	1
18	102846402	Asm, #4 Red Wire, 33"	1
19	102863801	Wire Asm, #4 Yellow, 12.5"	1
20	102931102	Plate, Component, Rear, No Obc	1
21	103397901	Relay, Spst No, 48v 30a, Pmt	2
22	105000501	Screw, M6 X 1 X 12 Ser Hex Flg	2
23	105075202	Controller, 500 Amp, Hfc, Sp	1
24	105112401	Relay, Spdt Nc, 48v 30a, Pmt	1
25	105195501	Cap, Quick Conn Tab, 1/4 In	5

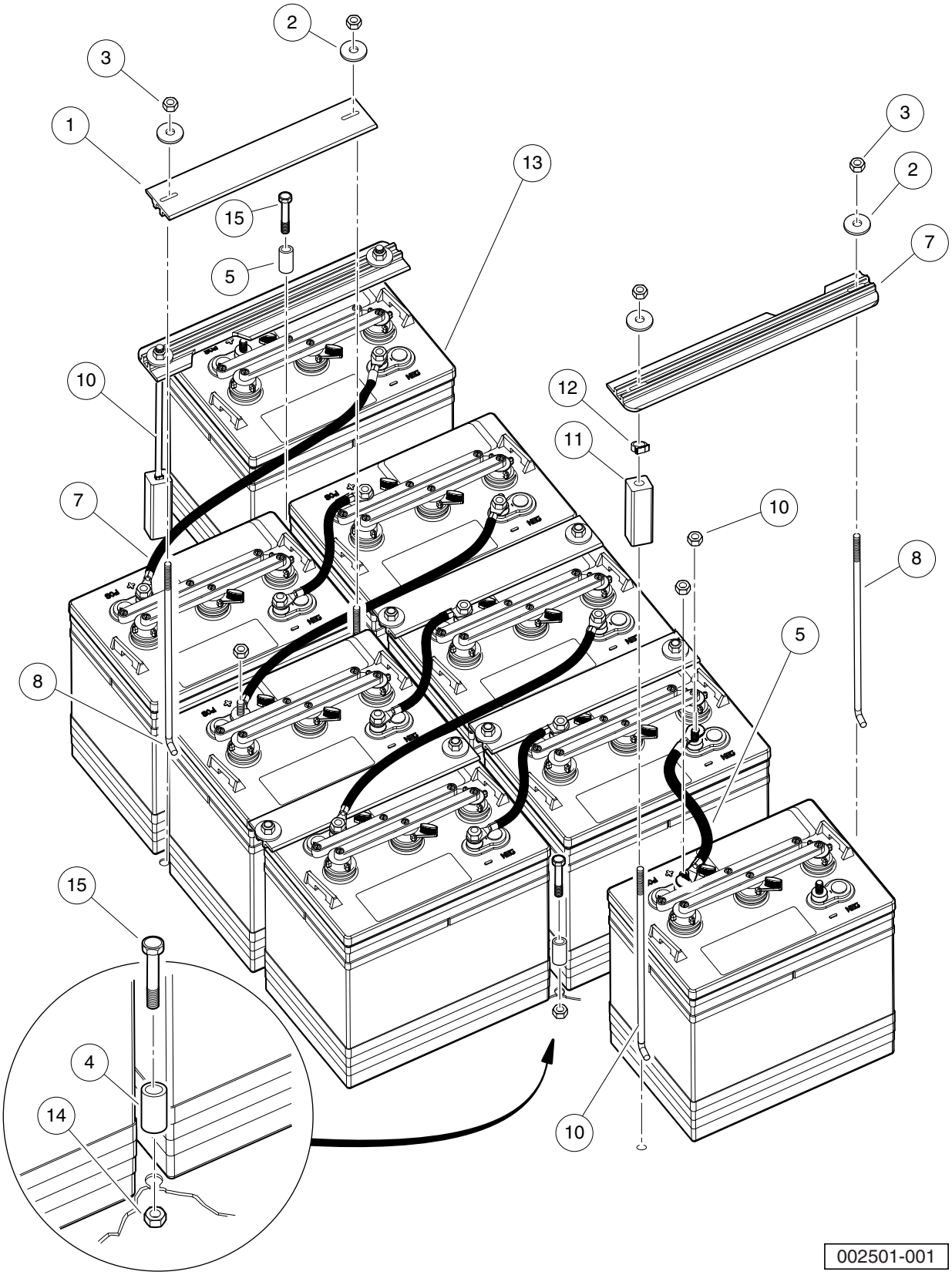
2
3
1
13
15
5
3
2
7
10
12
11
7
10
8
8
5
15
4
14
10
002501-001

BATTERIES 6-VOLT, STANDARD DUTY

ITEM	PART NO.	DESCRIPTION	QTY
		1 2 3 4	
1	101090801	Hold-Down, Battery	4
2	1012571	Washer, 5/16 Extra Thick Flat	12
3	1015072	Locknut, 5/16-18 Nylon Insert	12
4	1015608	Tube Spacer, Hydraulic Cylinder	2
5	102002901	Wire Assy, #4 Black	4
6	102764001	Wire Asm, #4 Black	3
7	102766201	Hold Down, Outside	2
8	102845201	Rod, Battery Hold Down 9.7"	10
9	102845203	Rod, Battery Hold Down 10.7"	2
10	102873401	5/16-18 Heavy Hex Nut	16
11	102980801	Extr, Plastic, 1 X 1 X 3	2
12	102980901	Clamp, Hose, Nylon, .25	2
13	105210201	Battery, 6v, Type E, Gc2, Wet	8
14	7473	Locknut, 5/16-18 Nylon Insert	2
15	8963	Screw, 5/16-18 X 1.75 Hex-Head Cap	2

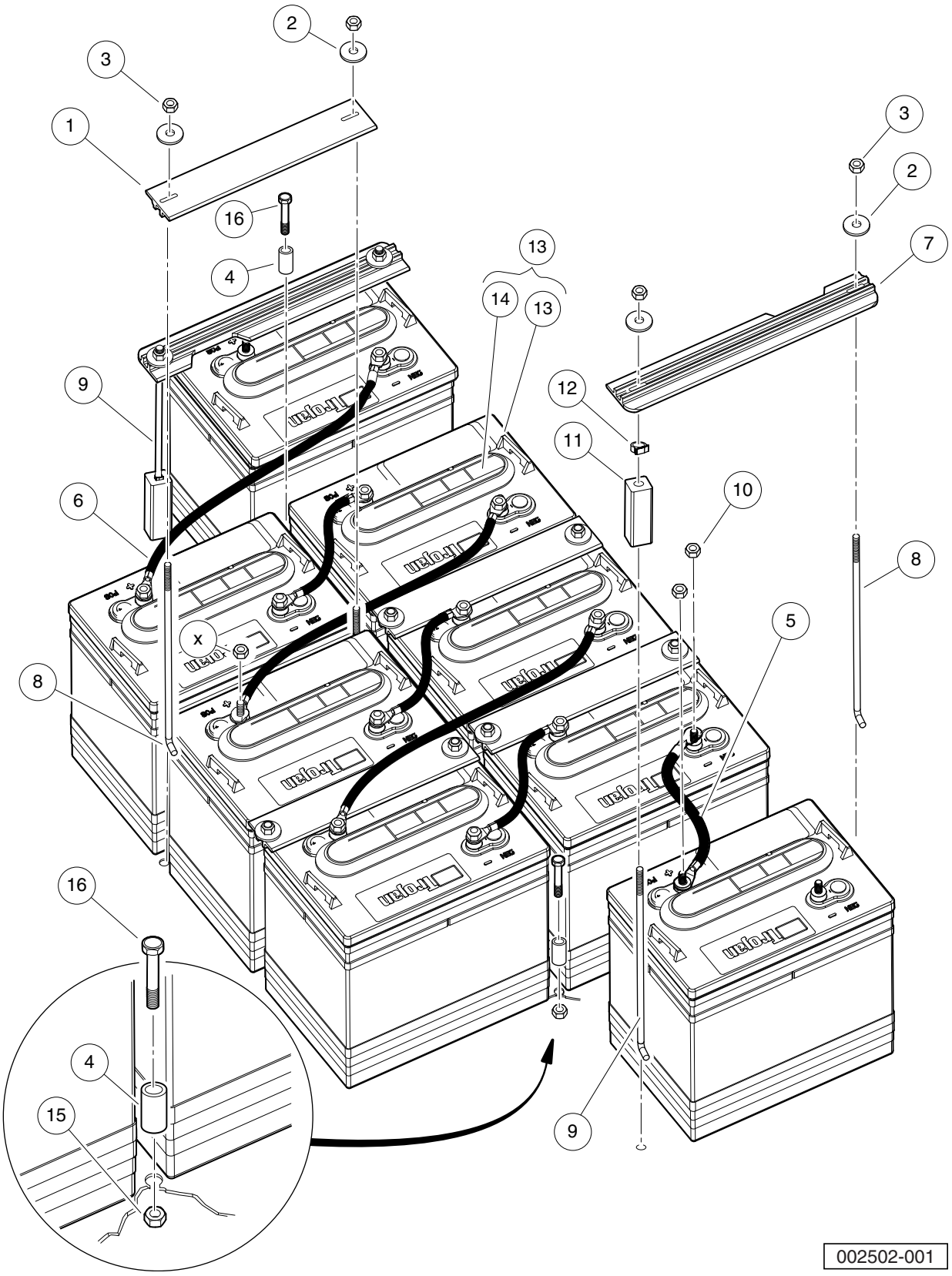
1
2
3
4
5
6
7
8
9
10
11
12
13
14
15
16
X
002502-001

BATTERIES 6-VOLT, HEAVY DUTY

ITEM	PART NO.	DESCRIPTION	QTY
		1 2 3 4	
1	101090801	Hold-Down, Battery	4
2	1012571	Washer, 5/16 Extra Thick Flat	12
3	1015072	Locknut, 5/16-18 Nylon Insert	12
4	1015608	Tube Spacer, Hydraulic Cylinder	2
5	102002901	Wire Assy, #4 Black	4
6	102764001	Wire Asm, #4 Black	3
7	102766201	Hold Down, Outside	2
8	102845203	Rod, Battery Hold Down 10.7"	10
9	102845204	Rod, Battery Hold Down 12"	2
10	102873401	5/16-18 Heavy Hex Nut	16
11	102980801	Extr, Plastic, 1 X 1 X 3	2
12	102980901	Clamp, Hose, Nylon, .25	2
13	103969701	Battery, 6-Volt, Trojan T145 (Wet) (includes item 14)	8
14	101831401	Battery Cap 6 Volt	1
15	7473	Locknut, 5/16-18 Nylon Insert	2
16	8963	Screw, 5/16-18 X 1.75 Hex-Head Cap	2

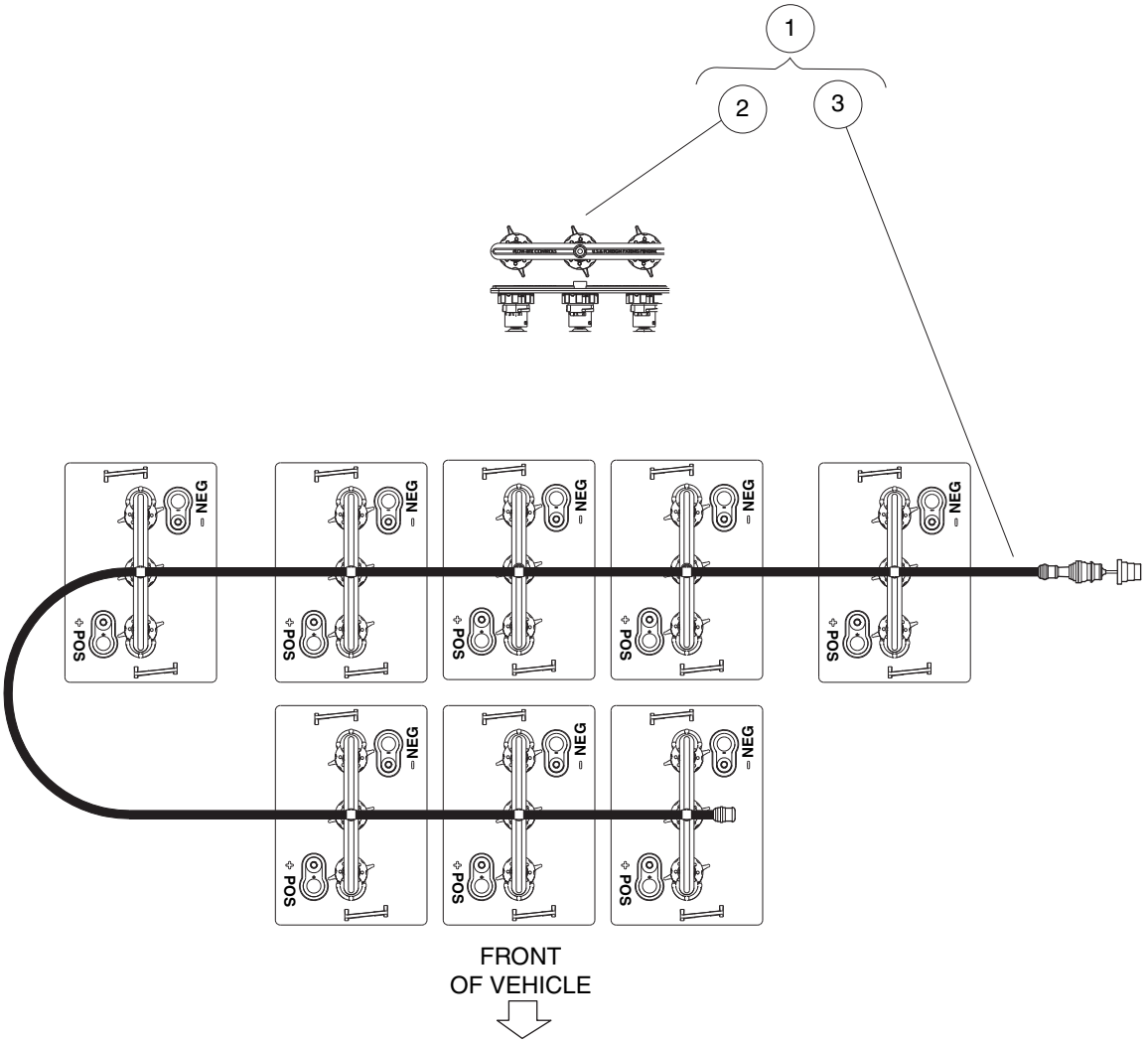

002524-001

SINGLE POINT WATERING SYSTEM (SPWS)

ITEM	PART NO.	DESCRIPTION	QTY
		1 2 3 4	
1	103497702	Kit, Spws, 8x6v (includes items 2 and 3)	1
2	103510501	Manifold, Lpr, 3 Vlve, Spw	8
3	103942601	Spws, Carryall, 8x6v	1

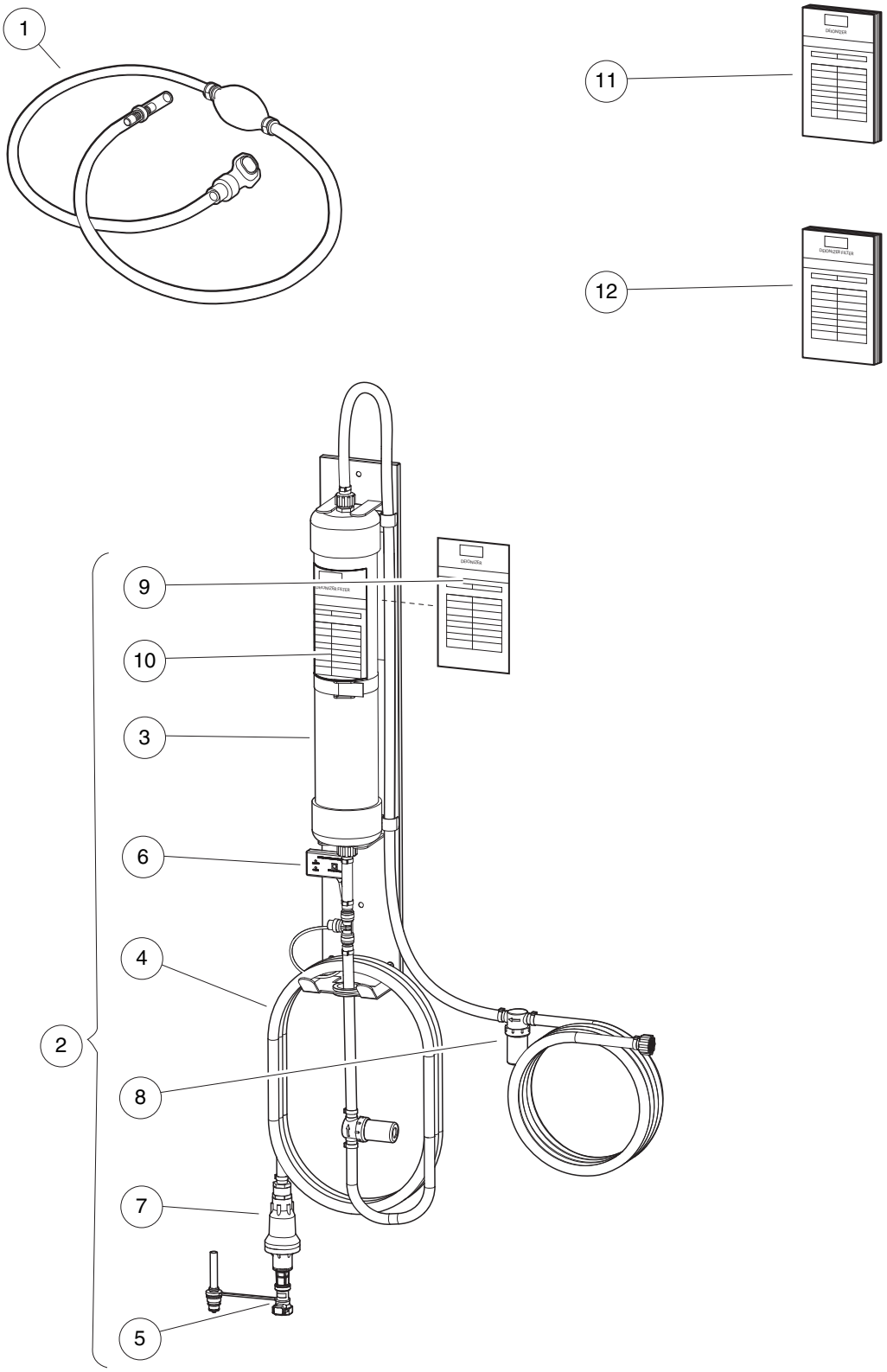

002523-003

HAND PUMP AND DEIONIZER (BATTERY-POWERED QUALITY LIGHT)

ITEM	PART NO.	DESCRIPTION	QTY
		1 2 3 4	
1	104006101	Kit, Hand Pump, Spws	1
2	105166801	Deionizer, w/Battery-Powered Water Quality Light (includes items 3 through 10)	1
3	104005901	Cartridge, Deionizer	1
4	105166901	Hose,outlet,deionizer	1
5	105167001	Flow Ind, W/coupler, Deionizer	1
6	105167101	Light, Quality, Battery-Powered, w/T-Fitting	1
7	105168501	Regulator, Pressure, Deionizer	1
8	105168601	Strainer, In-line, Deionizer	1
9	AM1300001	Decal, Filter Log, Blue	1
10	AM1300201	Decal, Inspect Log, Yellow	1
11	AM1300101	Decal, Filter Log, Blue, Pack of 100	A/R
12	AM1300301	Decal, Inspect Log, Yellow, Pack of 100	A/R

13

E

ELECTRIC MOTOR

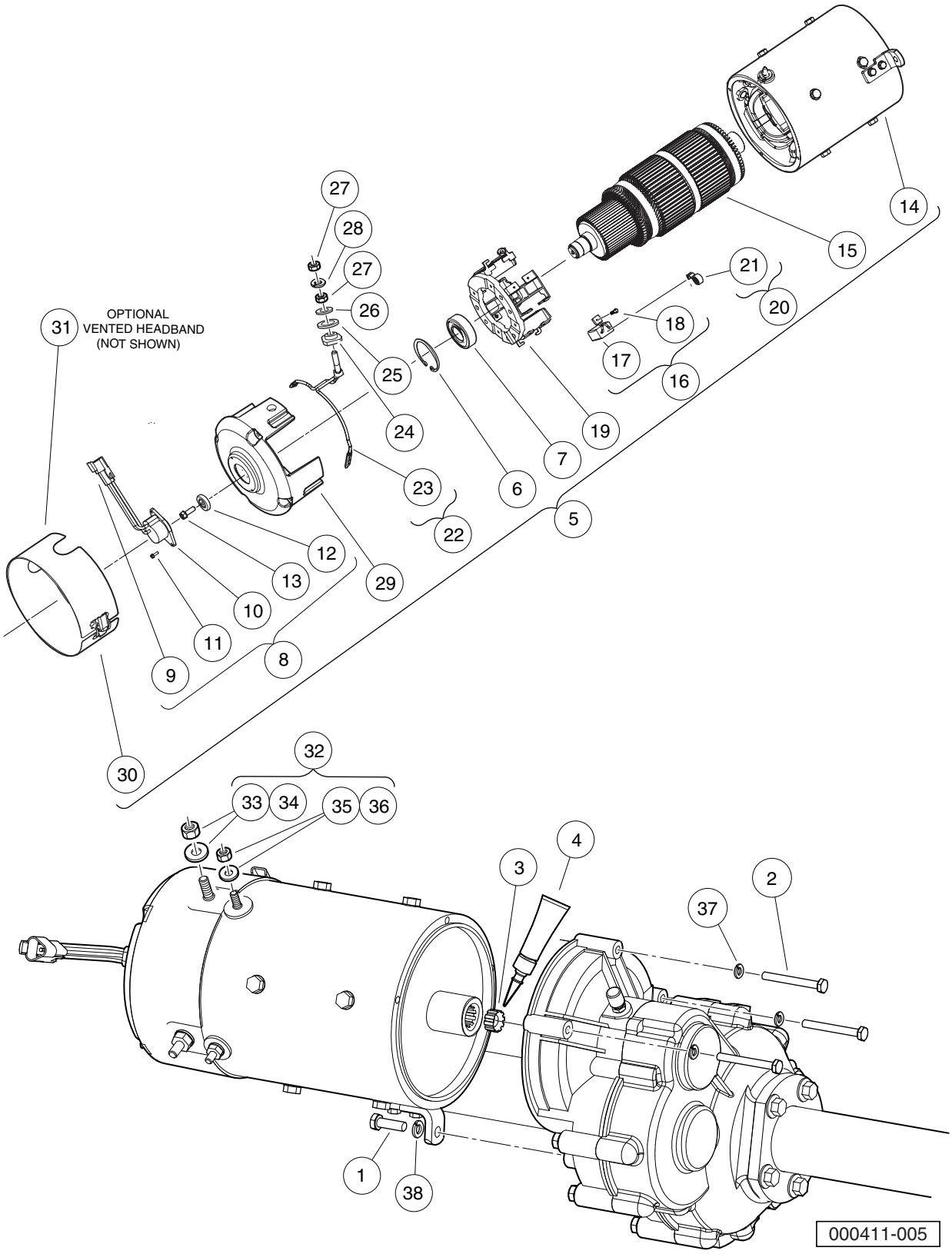
OPTIONAL
VENTED HEADBAND
(NOT SHOWN)
000411-005

MOTOR (MODEL DA5-4006) – IQ PLUS

ITEM	PART NO.	DESCRIPTION	QTY
		1 2 3 4	
1	1010934	Screw, 5/16-18 X 1.00 Hex Cap	1
2	1014201	Screw, 1/4-20 X 2.25 Hex Cap	3
3	102235201	Bumper, Drive Unit	1
4	102243403	Lubricant, Moly-Teflon (Single-Use Tube)	1
5	102775101	IQ Plus Electric Motor, 48-VDC 3.7 hp (includes items 6 through 30)	1
6	N/A	Ring, 2.24" Internal Retaining	1
7	102186401	Bearing, Ball	1
8	102704901	Kit, Speed Sensor (includes items 9 through 13)	1
9	101942301	Kit, 3-Pin Wedge Lock	1
10	N/A	Sensor, Motor Speed, ADC	1
11	N/A	Screw, #8-32, Taptite Thread	2
12	N/A	Magnet, ADC Motor	1
13	N/A	Screw, 1/4-20 x 0.5	1
14	N/A	Asm, Frame And Field, 3.7 Hp	1
15	N/A	Armature (Includes external hardware not shown)	1
16	102938601	Kit, Brush, 3.7 Hp (includes items 17 and 18)	1
17	N/A	Brush, Motor	8
18	N/A	Screw, Taptite	8
19	102938701	Asm, Brush Box, 3.7 Hp	1
20	102938801	Kit, Brush Spring, 3.7 Hp (includes item 21)	1
21	N/A	Brush Spring	8
22	102938901	Kit, Brush Lead Asm, 3.7 Hp (includes items 23 through 28)	1
23	N/A	Terminal and Lead Assembly	2
24	N/A	Insulator, Terminal	2
25	N/A	Washer, Insulating	2
26	N/A	Washer, Flat, 5/16, Brass/Bronze	2
27	N/A	Nut, 5/16, Steel	4
28	N/A	Lockwasher, 5/16, Steel	2
29	102939001	Commutator End Head, 3.7 Hp	1
30	102939101	Sealed Headband, 3.7 Hp	1
31	102939102	Vented Headband, 3.7 HP (optional - not shown)	1
32	102951701	Pkg, Terminal Hardware, 3.7hp (includes items 33 through 36)	1
33	N/A	Nut, 5/16, Steel	2
34	N/A	Lockwasher, 5/16, Steel	2
35	N/A	Nut, 1/4-20, Steel	2
36	N/A	Lockwasher, 1/4-20, Steel	2
37	451	Lockwasher, 1/4 Split	3
38	7174	Lockwasher, 5/16 Split	1

14

E

TRANSAXLE – ELECTRIC VEHICLES

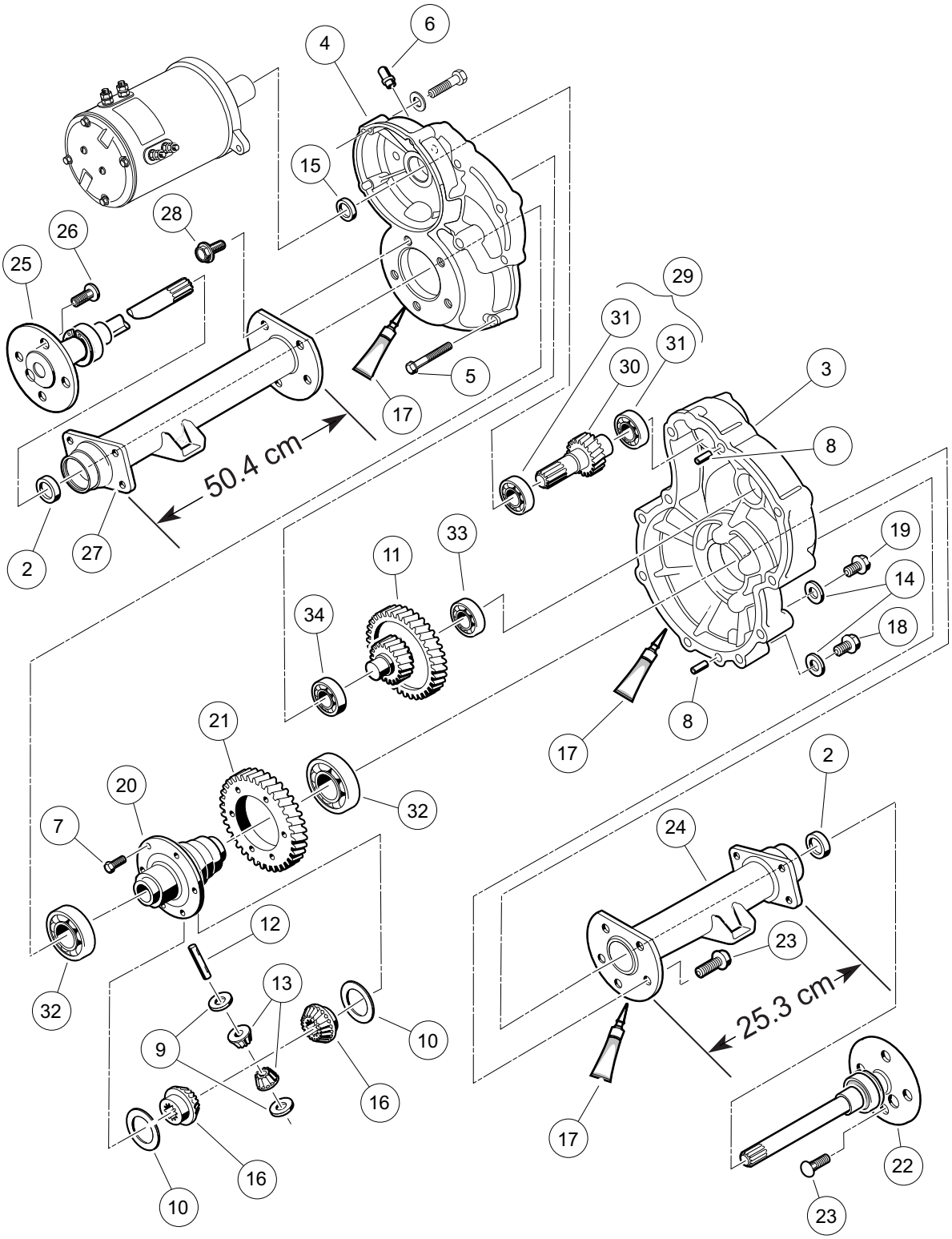
50.4 cm
25.3 cm
000223-005

ITEM	PART NO.	DESCRIPTION	QTY
		1 2 3 4	
1	102771701	Transaxle, Electric (includes items 2 through 34)	1
2	1013794	Axle Shaft Oil Seal	2
3	101895401	Gear Case, Driver-Side	1
4	101895501	Gear Case, Passenger-Side	1
5	101897001	Screw, M8-1.25 X 60mm Hex-Head	11
6	101897201	Breather	1
7	101897401	Screw, M10-1.25 X 25mm	6
8	101897601	Pin, 11mm OD X 8.5mm ID X 10mm	2
9	101903601	Washer, Thrust	2
10	101903701	Washer, Thrust	2
11	101906901	Intermediate Shaft Assembly	1
12	101922101	Pin, 15.99mm X 88.7mm Dowel	1
13	101923001	Gear, Differential Idler	2
14	101923201	Gasket	2
15	101923501	Seal, Lip	1
16	101923901	Gear, Differential	2
17	101928701	Liquid Gasket (Transaxle case)	1
18	101972101	Plug, M14-1.5 X 12mm Magnetic	1
19	101972201	Plug, M14-1.5 X 12mm Hex	1
20	102356601	Housing, Differential, 6 Bolt	6
21	102356801	Gear, Differential Output, 6-Bolt	6
22	102886301	Axle Assembly, Driver-Side (includes item 23)	1
23	101922201	Lug Stud	4
24	102886401	Tube, Axle, Driver-Side	1
25	102886501	Axle Assembly, Passenger-Side (includes item 26)	1
26	101922201	Lug Stud	4
27	102886601	Tube, Axle, Passenger-Side	1
28	102902801	Screw, M10 X 30	10
29	103582801	Asm, E Trans Shaft/bearing (includes items 30 and 31)	1
30	N/A	Shaft, Input	1
31	7335	Bearing	2
32	7330	Inner Axle Tube Bearing	2
33	7335	Bearing	1
34	7336	Bearing	1

15

E

BATTERY CHARGERS – HIGH-FREQUENCY

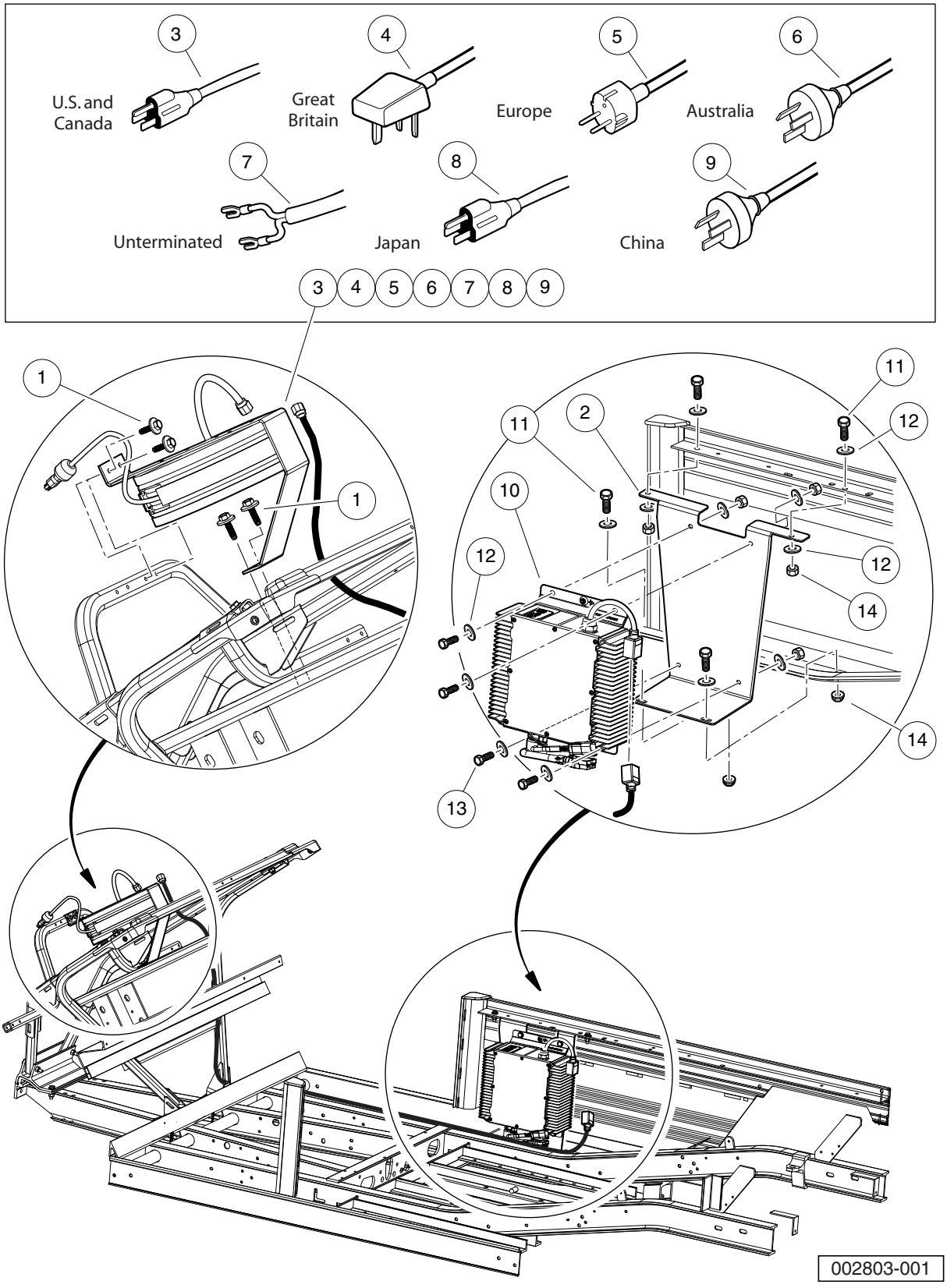
3
U.S. and Canada
4
Great Britain
5
Europe
6
Australia
7
Unterminated
8
Japan
9
China
3 4 5 6 7 8 9
1
1
11
2
11
12
10
12
12
14
14
13
002803-001

ON-BOARD BATTERY CHARGER, HIGH-FREQ.

ITEM	PART NO.	DESCRIPTION	QTY
		1 2 3 4	
1	102297125	Screw, M6-1.0x25.4, Thread-Forming, SEMS	4
2	103865201	Bracket, Mounting, Hf Charger	1
3	105117601	Cord Reel, Retractable, Us	1
4	105117602	Cord Reel, Retractable, Uk	1
5	105117603	Cord Reel, Retractable, Eu	1
6	105117604	Cord Reel, Retractable, Aus	1
7	105117605	Cord Reel, Retractable, Unterm	1
8	105117606	Cord Reel, Retractable, Japan	1
9	105117607	Cord Reel, Retractable, China	1
10	105161901	Asm, Chgr, Batt, Onboard, Quiq	1
11	304	Screw, 1/4-20 X 1.0 Hex-Head Cap	4
12	332	Washer, 1/4 Type A Narrow Flat	16
13	7847	Screw, 1/4-20 X 0.75 Hex-Head Cap	4
14	8233	Locknut, 1/4-20, Nylon Insert	8

16

E

MAINTENANCE AND SERVICE TOOLS

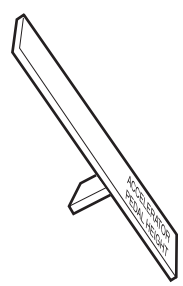

1

2

3

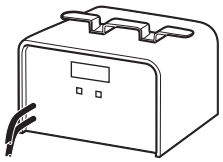

4

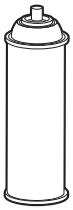

5

6

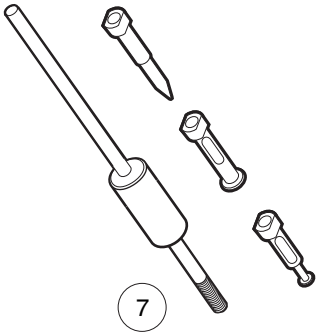

7

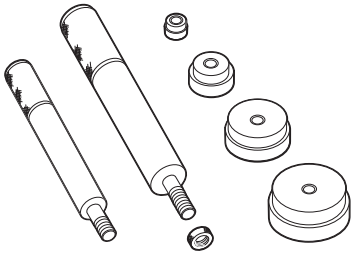

8

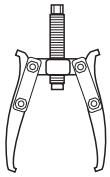

9

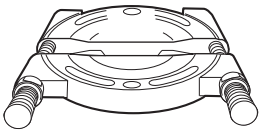

10

11

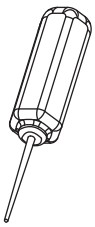

12

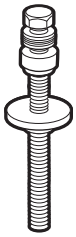

13

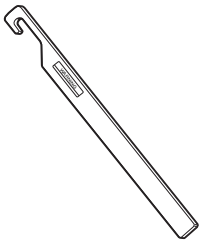

14

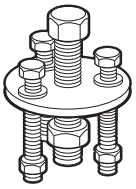

15

16

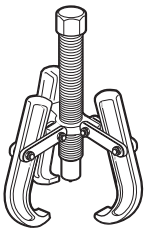

17

18

19

001060-002

ITEM	PART NO.	DESCRIPTION	QTY GAS	QTY ELEC
		1 2 3 4 The following tool list includes all tools available from Club Car for maintenance and service procedures for gasoline and electric golf and utlity vehilces. Be sure to carefully examine the tool list for applicability to your vehicle before ordering.		
1	101871001	Accelerator Pedal Adjustment Tool (Utility Vehicles)	1	1
2	101813202	Adhesive, Guide Ring, 3-Gram Tube		1
3	101641202	Arbor	1	
4	101831901	Battery Discharge Machine, 36/48 Volt		1
5	1014305	Battery Terminal Protector Spray	1	1
6	1011767	Battery Thermometer	1	1
7	1016417	Bearing and Oil Seal Remover Assembly	1	1
8	1016416	Bearing Driver Set	1	1
9	1012811	Bearing Puller	1	1
10	1012812	Bearing Puller Wedge Attachment	1	1
11	101887101	Calibration Test Module		1
12	102562401	Charger Bezel Tool		1
		Clutch Tools (items 14 - 20)	1	
13	101808401	Clutch Cam Installation Tool (for Subaru and Kawasaki engines)	1	
14	105072501	Drive Clutch Holder Tool Assembly (for Subaru and Kawasaki engines)	1	
15	1014497	Drive Clutch Hub Puller (for Subaru and Kawasaki engines)	1	
16	1014496	Drive Clutch Puller (for Subaru and Kawasaki engines)	1	
17	1014508	Driven Clutch Cam Puller (for Subaru and Kawasaki engines)	1	
18	1014507	Driven Clutch Puller Plug (for Subaru and Kawasaki engines)	1	
19	101809101	Press Weldment (for Subaru and Kawasaki engines)	1	
		Please refer to the maintenance and service manual for proper tool application.		

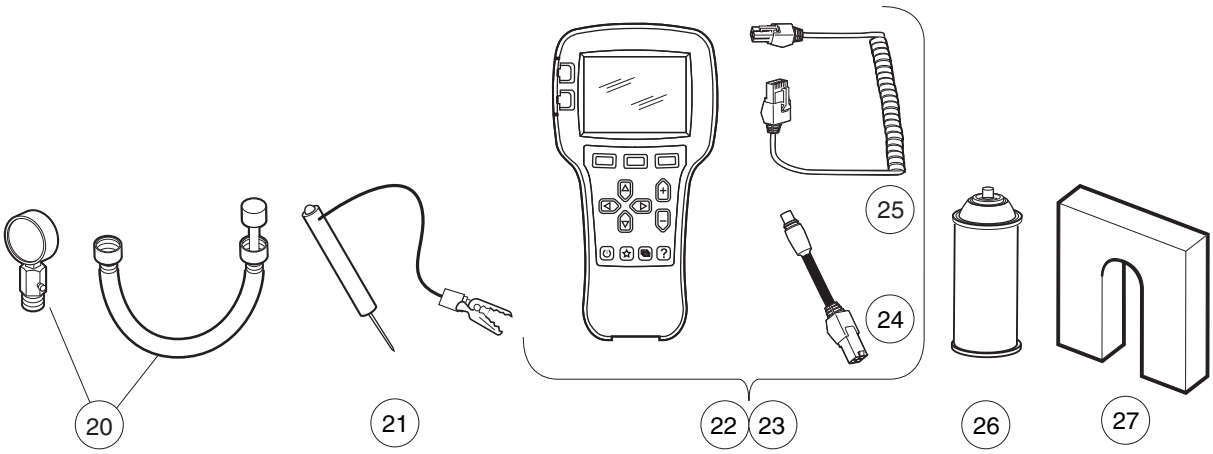
20
21
22
23
24
25
26
27

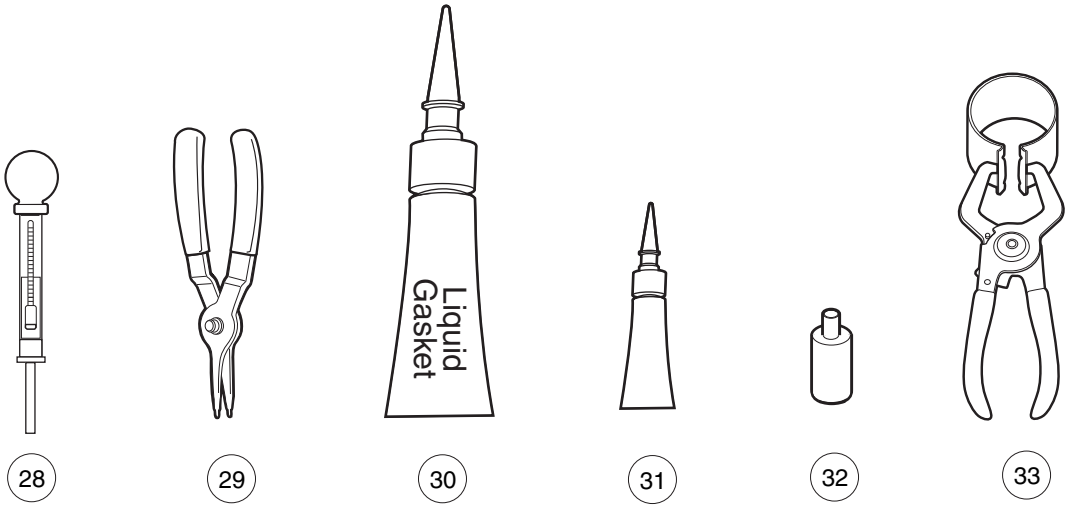
Liquid
Gasket
28
29
30
31
32
33

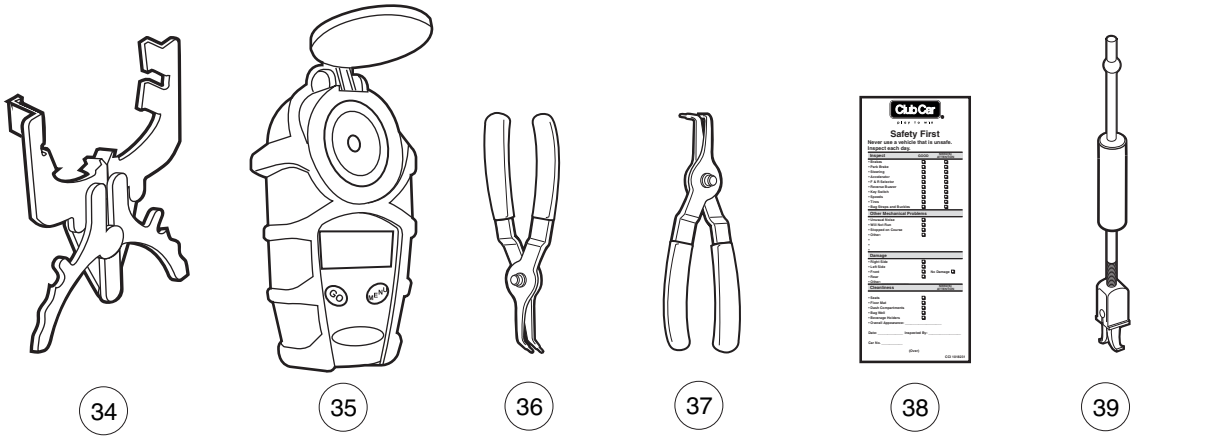
Club Car
Safety First
34
35
36
37
38
39

001061-002

MAINTENANCE AND SERVICE TOOLS, CONTINUED

ITEM	PART NO.	DESCRIPTION	QTY GAS	QTY ELEC
		1 2 3 4		
20	101641002	Compression Gauge and Adapter	1	
21	1011273	Continuity Tester	1	1
22	105234501	Controller Diagnostic Tool (CDT) User Kit (includes items 25 and 26)		1
23	105234502	Controller Diagnostic Tool (CDT) OEM Kit (includes items 25 and 26)		1
24	102251501	Adaptor, Cable		1
25	105209601	CDT Cable		1
26	1012151	Dry Moly Lubricant	1	1
27	1016418	Gear Yoke	1	1
28	1011478	Hydrometer	1	1
29	1013593	Internal Retaining Ring Pliers	1	1
30	101928701	Liquid Gasket (transaxle case)	1	1
31	102243402	Moly-Teflon Lubricant (4-oz. (113-gram) tube)		1
32	102587201	Paint Pen, Touch-Up, Precedent Underbody ,Äì Black	1	1
33	1016414	Piston Ring Compressor Kit	1	
34	1016415	Piston Ring Pliers	1	
35	AM1285701	Refractometer	1	1
36	1012549	Retaining Ring Pliers, 45¬× External	1	1
37	1012560	Retaining Ring Pliers, 90¬× Internal	1	1
38	101823101	Safety First Card (50 per pack)	1	1
39	1012809	Seal Puller	1	1

Please refer to the maintenance and service manual for proper tool application.

40

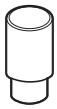

41

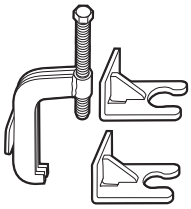

42

43

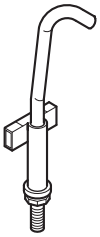

44

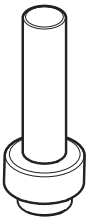

45

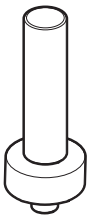

46

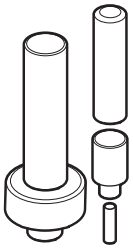

47

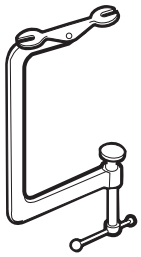

48

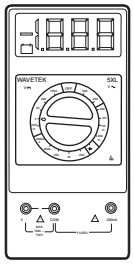

49

001062-001

MAINTENANCE AND SERVICE TOOLS, CONTINUED

ITEM	PART NO.	DESCRIPTION	QTY GAS	QTY ELEC
		1 2 3 4		
40	1014264	Steering Column Bearing Press Tool	1	1
41	1014259	Steering Column Retaining Ring Tool	1	1
42	102061201	Steering Wheel Puller Tool	1	1
43	AM10753	Tachometer (includes gasoline engine pick up lead only)	1	
44	102570401	Tool, Tensioning, Starter Generator (For Precedent vehicles)	1	
45	1014162	Transaxle Axle Seal Tool (for electric vehicles)		1
46	1014161	Transaxle Pinion Seal Tool (for electric vehicles)		1
47	1014115	Transmission Tool Kit (for electric vehicles)		1
48	101641101	Valve Spring Compressor	1	
49	1011480	Volt Ohm Meter	1	1

Please refer to the maintenance and service manual for proper tool application.

INDEX

Part Number and *Page*

AM10753 *17-7*
AM10419 *11-11*
AM1300001 *13-17*
AM1300101 *13-17*
AM1300201 *13-17*
AM1300301 *13-17*
SVP370901 *1-31*
SVP387901 *1-33*
SVP658101 *1-31*
SVP658401 *1-31*
SVP658602 *1-31*
SVP659001 *1-31*
SVP659101 *1-31*
SVP659301 *1-31*
SVP659503 *1-31*
SVP664101 *1-31*
SVP713301 *1-31*
SVP716902 *1-33*
SVP716903 *1-33*
SVP716905 *1-33*
SVP732202 *1-31*
SVP732301 *1-31*
SVP732901 *1-31*
SVP736801 *1-31*
SVP777401 *1-33*
SVP777402 *1-33*
SVP777403 *1-33*
SVP777502 *1-31*
SVP826501 *1-51*
SVP826502 *1-51*
SVP860101 *1-33*
SVPP229901 *1-31*
SVPP234001 *1-31*
183 *1-53*, *11-7*, *11-9*
304 *16-3*
320 *1-19*, *5-13*, *5-15*
324 *1-65*
332 *1-25*, *1-31*, *1-55*, *7-15*, *16-3*
334 *1-19*, *1-55*, *5-5*, *5-7*, *6-3*, *6-5*, *11-7*, *11-9*
357 *1-59*, *1-61*, *1-79*, *6-13*, *6-17*, *6-21*, *6-25*
451 *5-11*, *5-21*, *5-23*, *14-3*
705 *1-31*, *1-59*, *1-61*, *1-79*
706 *1-59*, *1-61*, *1-79*, *6-13*, *6-17*, *6-21*, *6-25*
1028 *5-3*
1032 *5-3*
1035 *1-55*
1218 *6-27*, *9-15*, *9-17*
1241 *1-21*, *1-23*, *1-31*, *1-79*, *1-81*, *4-7*, *4-9*, *5-3*, *5-5*, *5-7*, *5-17*, *5-19*, *7-17*, *7-19*, *7-27*, *7-29*, *8-5*, *8-7*, *9-15*, *9-17*
1242 *1-79*, *1-81*, *4-37*, *5-13*, *5-15*, *5-17*, *5-19*, *7-11*, *7-13*, *7-17*, *7-19*
1624 *1-85*, *5-5*, *5-7*, *6-3*, *7-11*, *7-13*
2402 *1-85*, *6-11*, *6-15*, *6-19*, *6-23*
7048 *6-13*, *6-17*, *6-21*, *6-25*
7049 *1-67*
7173 *4-7*, *4-9*, *7-27*, *7-29*
7174 *1-79*, *1-81*, *6-13*, *6-17*, *6-21*, *6-25*, *7-11*, *7-13*, *10-3*, *14-3*
7274 *6-29*
7308 *6-29*
7330 *15-3*
7335 *15-3*
7336 *15-3*
7473 *1-21*, *1-23*, *1-31*, *1-57*, *1-59*, *1-61*, *4-7*, *4-9*, *5-3*, *5-5*, *5-7*, *5-13*, *5-15*, *5-17*, *5-19*, *6-27*, *7-17*, *7-19*, *7-27*, *7-29*, *9-15*, *9-17*, *13-11*, *13-13*
7479 *1-55*
7561 *1-59*, *1-61*
7591 *8-11*
7716 *5-3*
7818 *7-17*, *7-19*
7820 *4-7*, *4-9*
7840 *6-29*
7847 *5-19*, *16-3*
7893 *4-37*, *7-17*, *7-19*
7910 *6-29*
8056 *7-23*
8057 *1-105*, *4-27*, *7-19*, *7-21*, *7-23*
8058 *1-105*, *4-27*, *7-19*, *7-21*, *7-23*
8067 *6-13*, *6-17*, *6-21*, *6-25*
8233 *1-31*, *1-55*, *5-5*, *5-7*, *7-15*, *9-13*, *12-11*, *16-3*
8248 *7-15*
8251 *1-33*
8450 *11-7*, *11-9*
8639 *1-103*, *1-105*, *4-37*, *6-5*, *7-17*, *7-19*
8717 *5-5*, *5-7*, *7-17*, *7-19*, *12-3*
8754 *1-7*, *1-31*, *1-39*, *1-41*, *1-43*, *1-85*, *4-29*, *4-31*, *5-5*, *5-7*, *5-13*, *5-15*, *6-3*, *6-5*, *6-11*, *6-13*, *6-15*, *6-17*, *6-19*, *6-21*, *6-23*, *6-25*, *7-11*, *7-13*
8755 *6-13*, *6-17*, *6-21*, *6-25*
8861 *6-11*, *6-15*, *6-19*, *6-23*
8935 *1-21*, *1-23*
8963 *1-21*, *1-23*, *1-31*, *13-11*, *13-13*
8990 *5-13*, *5-15*, *6-3*, *12-5*
1010005 *6-29*
1010138 *1-59*, *1-61*, *6-11*, *6-15*, *6-19*, *6-23*
1010145 *6-31*, *6-33*
1010150 *6-13*, *6-17*, *6-21*, *6-25*
1010177 *6-13*, *6-17*, *6-21*, *6-25*
1010200 *6-13*, *6-17*, *6-21*, *6-25*
1010434 *1-31*
101043502 *1-57*, *1-59*, *1-61*
1010577 *8-5*, *8-7*
1010805 *5-3*
1010829 *5-13*, *5-15*, *5-17*, *5-19*
1010850 *5-11*, *5-21*, *5-23*
1010877 *5-3*
1010878 *5-3*
101090801 *13-11*, *13-13*
1010909 *1-53*
1010921 *5-3*
1010927 *5-3*
1010932 *5-3*
1010933 *5-3*
1010934 *1-31*, *1-79*, *1-81*, *7-27*, *7-29*, *14-3*
1010954 *7-17*, *7-19*
1010984 *2-3*, *2-5*, *2-7*
1011017 *4-3*
1011084 *5-7*
1011114 *5-11*, *5-21*, *5-23*, *9-13*, *12-11*
1011137 *5-11*, *5-23*
1011154 *5-11*, *5-21*, *5-23*
1011273 *17-5*
1011298 *5-11*, *5-21*, *5-23*
1011303 *5-11*, *5-21*, *5-23*
1011314 *5-11*, *5-21*, *5-23*
1011393 *6-29*
1011402 *5-3*
1011415 *6-31*, *6-33*
1011418 *5-3*
1011439 *4-7*, *4-9*
101146302 *5-11*, *5-21*, *5-23*
1011464 *5-11*, *5-21*, *5-23*
1011465 *5-11*, *5-21*, *5-23*
1011466 *5-11*, *5-21*, *5-23*
1011467 *5-11*, *5-21*, *5-23*
1011478 *17-5*
1011480 *17-7*
1011494 *5-11*, *5-21*, *5-23*
1011546 *1-83*
1011553 *1-79*, *1-81*, *3-7*, *3-13*
1011557 *4-7*, *4-9*
1011610 *4-3*
1011694 *5-5*, *5-7*
1011697 *6-5*
1011734 *5-7*
1011767 *17-3*
1011779 *5-13*, *5-15*, *5-17*, *5-19*
1011825 *4-7*, *4-9*
101187702 *5-3*
1011887 *6-29*
1011892 *6-29*
1011931 *5-5*, *5-7*
1011937 *1-21*, *1-23*
1011990 *1-31*, *1-59*, *1-61*, *1-79*, *1-85*
1012151 *17-5*
1012159 *1-39*, *1-41*, *1-43*
1012181 *6-31*, *6-33*
1012182 *6-31*, *6-33*
1012295 *1-105*, *4-7*, *4-9*, *7-17*, *7-19*
1012303 *6-13*, *6-17*, *6-21*, *6-25*
101242802 *1-7*
1012431 *1-105*, *4-27*, *7-19*
1012528 *1-57*, *10-3*, *13-9*
1012549 *17-5*
1012560 *17-5*
1012565 *6-9*

INDEX

1012566 *6-9*
1012571 *6-5*, *13-11*, *13-13*
1012604 *6-5*
1012605 *6-5*
1012649 *9-7*
1012809 *17-5*
1012811 *17-3*
1012812 *17-3*
1012836 *11-11*
1013035 *6-3*
1013042 *6-3*, *6-11*, *6-15*, *6-19*, *6-23*
1013044 *6-3*
1013052 *6-3*
1013061 *1-53*
1013135 *6-29*
1013309 *1-25*
1013357 *4-5*
1013483 *1-79*
1013531 *5-17*, *5-19*
1013589 *7-17*, *7-19*
1013593 *17-5*
1013609 *4-37*, *7-17*, *7-19*
1013734 *1-57*, *13-9*
1013746 *9-7*
1013794 *15-3*
1013869 *5-3*
1013870 *5-3*
1013876 *5-3*
1013924 *5-11*, *5-21*, *5-23*, *8-5*, *8-7*
1014007 *5-5*, *5-7*, *9-13*, *12-3*, *12-11*
1014051 *11-9*
1014055 *11-7*, *11-9*
1014056 *11-7*, *11-9*
1014057 *11-7*, *11-9*
1014058 *11-7*, *11-9*
1014059 *11-7*, *11-9*
1014062 *11-7*, *11-9*
1014063 *11-7*, *11-9*
1014065 *7-17*, *7-19*, *11-7*, *11-9*
1014072 *11-11*
1014078 *11-11*
1014080 *11-11*
1014115 *17-7*
1014116 *9-3*
1014125 *6-5*
1014126 *6-5*
1014145 *7-17*, *7-19*
1014161 *17-7*
1014162 *17-7*
1014201 *14-3*
1014213 *6-5*
1014214 *6-5*
1014217 *6-5*
1014259 *17-7*
1014264 *17-7*
1014276 *6-13*, *6-17*, *6-21*, *6-25*
1014287 *11-7*, *11-9*
1014288 *6-5*, *7-27*, *11-7*, *11-9*
1014289 *7-7*, *7-9*
1014305 *17-3*
1014321 *1-65*, *1-67*
1014375 *7-27*
1014453 *11-7*, *11-9*
1014454 *11-11*
1014496 *17-3*
1014497 *17-3*
1014507 *17-3*
1014508 *17-3*
1014555 *6-31*, *6-33*
1014573 *6-31*, *6-33*
1014789 *7-3*, *7-5*
1014807 *7-19*, *7-21*, *7-23*
1014808 *7-19*
1014902 *6-31*, *6-33*
1014948 *4-37*
101503202 *1-19*
1015072 *13-11*, *13-13*
1015137 *9-7*
1015154 *4-29*
1015156 *4-29*, *4-31*
1015157 *4-29*, *4-31*
1015187 *4-29*, *4-31*
1015332 *7-3*, *7-5*
1015363 *1-67*
1015373 *7-17*, *7-19*
1015391 *1-57*
1015392 *13-7*
1015399 *1-29*
1015400 *1-57*
1015405 *7-17*, *7-19*
1015445 *1-79*
1015524 *17-3*
101553901 *3-3*, *3-5*, *3-9*, *3-11*
1015583 *1-55*, *6-17*, *6-21*, *6-25*
101558302 *6-13*, *6-31*, *6-33*
1015597 *6-13*, *6-17*, *6-21*, *6-25*
1015608 *13-11*, *13-13*
1015656 *1-77*
1015661 *1-57*, *1-65*
1015700 *1-55*
1015720 *13-9*
1015737 *7-17*, *7-19*
1015741 *7-17*, *7-19*, *13-5*
1015752 *7-17*, *7-19*
1015878 *1-105*, *4-27*, *7-19*, *7-21*, *7-23*
1015932 *7-11*, *7-13*
1015969 *8-9*
1016060 *1-55*
1016077 *1-77*
101609401 *1-31*, *3-3*, *3-5*, *3-9*, *3-11*
1016103 *8-11*
1016154 *6-9*
1016183 *6-5*
1016201 *11-7*, *11-9*
1016214 *6-9*
1016269 *6-5*
1016289 *11-7*, *11-9*
1016319 *5-13*, *5-15*
1016320 *5-13*, *5-15*
1016346 *6-11*, *6-15*, *6-19*, *6-23*
1016349 *6-11*, *6-15*, *6-19*, *6-23*
1016350 *6-11*, *6-15*, *6-19*, *6-23*
1016351 *6-11*, *6-15*, *6-19*, *6-23*
1016353 *6-11*, *6-15*, *6-19*, *6-23*
1016356 *4-5*, *13-9*
1016384 *6-13*, *6-17*, *6-21*, *6-25*
101638502 *6-11*, *6-15*, *6-19*, *6-23*
1016386 *6-13*, *6-17*, *6-21*, *6-25*
1016387 *6-13*, *6-17*, *6-21*, *6-25*
1016389 *6-13*, *6-17*, *6-21*, *6-25*
101641002 *17-5*
101641101 *17-7*
101641202 *17-3*
1016414 *17-5*
1016415 *17-5*
1016416 *17-3*
1016417 *17-3*
1016418 *17-5*
1016423 *4-5*, *13-5*
1016557 *5-11*, *5-21*, *5-23*
1016573 *5-11*, *5-21*, *5-23*
1016603 *1-59*, *1-61*
1016801 *11-7*, *11-9*
1016849 *4-7*, *4-9*, *4-11*, *4-13*
1016851 *4-11*, *4-13*
1016901 *11-7*
1016929 *4-29*
1016967 *13-9*
1017029 *5-3*
1017145 *11-11*
1017211 *5-13*, *5-15*
1017226 *6-13*, *6-17*, *6-21*, *6-25*
1017266 *6-11*, *6-15*, *6-19*, *6-23*
1017273 *6-7*, *6-9*
1017313 *6-5*
1017314 *6-5*
1017315 *6-5*
1017317 *6-5*
1017378 *5-5*, *5-7*
1017380 *5-5*, *5-7*
1017424 *5-5*, *5-7*
1017686 *11-11*
1017774 *1-59*, *1-61*
101791101 *5-21*
101796201 *5-5*, *5-7*
101808401 *17-3*
101809101 *17-3*
101813202 *17-3*

INDEX

101817401 *5-5*, *5-7*
101818801 *5-7*
101823101 *17-5*
101824101 *8-11*
101825101 *3-3*, *3-5*, *3-9*, *3-11*, *4-11*, *4-13*
101825102 *3-9*, *3-11*
101830701 *4-15*, *4-17*, *4-19*, *4-21*
101831401 *13-13*
101831901 *17-3*
101833401 *11-11*
101834502 *4-15*, *4-17*, *4-19*, *4-21*
101834602 *8-5*, *8-7*
101835601 *1-55*, *4-23*, *4-25*
101837401 *1-129*
101837502 *1-129*
101850301 *4-3*, *6-7*, *6-9*
101851101 *4-15*, *4-17*, *4-19*, *4-21*
101856002 *4-11*
101856101 *1-9*
101856102 *7-17*, *7-19*
101861901 *5-5*, *5-7*
101862001 *5-5*
101865301 *5-13*, *5-15*
101871001 *17-3*
101874601 *5-13*, *5-15*
101878201 *5-3*
101879401 *6-3*
101879501 *6-3*
101879601 *6-3*
101879701 *6-3*
101879801 *6-3*
101879901 *6-3*
101880001 *6-3*
101880101 *6-3*
101880201 *6-3*
101880301 *6-3*
101880701 *5-11*, *5-21*, *5-23*
101884801 *8-5*, *8-7*
101886101 *9-13*, *12-11*
101887101 *17-3*
101895401 *15-3*
101895501 *15-3*
101897001 *15-3*
101897201 *15-3*
101897401 *15-3*
101897601 *15-3*
101898001 *7-27*, *7-29*
101903601 *15-3*
101903701 *15-3*
101906901 *15-3*
101908101 *13-7*
101908401 *7-15*, *13-7*
101915201 *3-13*
101918501 *5-3*, *5-5*, *5-7*
101919801 *5-5*, *5-7*
101922101 *15-3*
101922201 *15-3*
101922501 *7-15*
101923001 *15-3*
101923201 *15-3*
101923501 *15-3*
101923901 *15-3*
101928701 *15-3*, *17-5*
101932201 *4-7*, *4-9*
101935301 *5-13*, *5-15*
101942301 *14-3*
101946201 *1-29*, *1-33*
101953102 *5-17*
101953106 *5-13*, *5-15*, *5-19*
101954301 *1-25*
101955101 *4-7*, *4-9*
101957101 *4-7*, *4-9*
101958602 *1-55*
101960501 *3-13*
101963401 *1-29*, *1-77*, *7-25*, *8-5*, *8-7*
101972101 *15-3*
101972201 *15-3*
101974701 *4-15*, *4-17*, *4-19*, *4-21*
101974702 *4-15*, *4-17*, *4-19*, *4-21*
101974703 *4-15*, *4-17*, *4-19*, *4-21*
101974704 *4-15*, *4-17*, *4-19*, *4-21*
101974705 *4-15*, *4-17*, *4-19*, *4-21*
101974706 *4-15*, *4-17*, *4-19*, *4-21*
101974707 *4-15*, *4-17*, *4-19*, *4-21*
101974708 *4-15*, *4-17*, *4-19*, *4-21*
101974709 *4-15*, *4-17*, *4-19*, *4-21*
101974710 *4-15*, *4-17*, *4-19*, *4-21*
101974711 *4-15*, *4-17*, *4-19*, *4-21*
101974712 *4-15*, *4-17*, *4-19*, *4-21*
101984801 *6-5*
101987701 *9-7*
101990801 *5-17*, *5-19*
102002802 *13-9*
102002901 *13-11*, *13-13*
102022601 *6-11*, *6-15*, *6-19*, *6-23*
102022602 *6-3*, *6-11*, *6-15*, *6-19*, *6-23*
102025701 *5-9*
102025801 *9-5*, *9-7*
102026001 *5-5*, *5-7*
102056001 *1-81*
102059501 *12-7*, *12-9*
102061201 *17-7*
102065103 *1-81*
102065901 *1-55*
102075801 *3-5*, *3-11*
102155801 *11-11*
102158901 *5-5*, *5-7*
102162601 *5-17*
102166901 *5-17*
102186401 *14-3*
102196901 *13-5*
102198001 *4-5*
102199001 *1-105*, *4-7*, *4-9*
102235201 *14-3*
102238001 *4-5*, *13-9*
102240501 *13-9*
102242101 *8-5*, *8-7*, *11-11*
102242401 *1-39*, *1-41*, *1-43*
102243402 *17-5*
102243403 *14-3*
102251501 *17-5*
102269701 *7-25*
102274101 *12-23*
102278001 *6-5*
102289201 *6-3*, *6-11*, *6-15*, *6-19*, *6-23*
102292701 *1-15*
102292801 *5-13*, *5-15*, *5-17*, *5-19*
102296020 *12-3*
102296150 *1-31*, *1-35*, *1-37*
102296301 *1-15*, *1-31*, *1-35*, *1-37*, *1-39*, *1-41*, *1-43*
102296530 *1-15*
102296819 *1-5*
102297125 *1-15*, *1-17*, *1-19*, *1-47*, *1-49*, *4-7*, *4-9*, *4-37*, *16-3*
102297230 *13-3*
102298116 *8-11*
102298185 *1-55*
102298401 *1-31*, *1-55*, *1-63*, *1-65*, *1-77*, *6-31*, *6-33*
102298720 *1-31*
102299550 *1-31*, *1-63*, *1-65*, *1-77*
102301401 *1-55*
102311501 *1-9*
102323101 *5-13*, *5-15*, *5-17*, *5-19*
102323201 *5-13*, *5-15*, *5-17*, *5-19*
102323501 *1-7*, *1-39*, *1-41*, *1-43*, *4-29*, *4-31*
102345901 *3-13*
102355301 *7-27*
102356601 *15-3*
102356801 *15-3*
102399001 *6-33*
102410604 *8-11*, *9-13*
102411203 *9-3*
102411209 *9-15*, *9-17*
102459301 *3-7*, *3-13*
102476401 *9-13*, *12-11*
102490301 *9-13*
102491501 *1-85*, *11-7*, *11-9*
102492301 *13-5*
102498201 *9-13*, *12-7*, *12-9*, *12-11*
102506401 *1-55*, *6-31*, *6-33*
102517501 *4-7*
102517601 *4-9*
102518301 *3-7*
102526201 *12-3*
102529101 *1-105*, *4-27*
102531402 *1-31*

INDEX

102531601 *1-31*
102538601 *13-5*
102540301 *8-5*, *8-7*
102541401 *1-31*
102541402 *8-11*
102541470 *1-31*
102541501 *1-15*, *1-31*
102546401 *4-7*
102554512 *1-65*
102557201 *1-39*, *1-41*, *1-43*
102558201 *8-3*, *9-15*, *9-17*
102562401 *17-3*
102564002 *6-13*, *6-17*, *6-21*, *6-25*
102570401 *17-7*
102572401 *13-5*
102581201 *1-39*, *1-41*, *1-43*
102582401 *1-31*, *1-35*, *1-37*
102587201 *17-5*
102590801 *1-67*
102617201 *8-5*, *8-7*, *10-3*
102617801 *12-23*
102618601 *1-31*
102621501 *1-69*, *12-3*, *12-7*, *12-9*
102621601 *1-7*
102670701 *1-7*
102684501 *6-13*, *6-17*, *6-21*, *6-25*
102704901 *14-3*
102711201 *7-17*, *7-19*
102725501 *9-15*, *9-17*
102732401 *8-5*, *8-7*
102764001 *13-11*, *13-13*
102766201 *13-11*, *13-13*
102766301 *6-13*, *6-17*, *6-21*, *6-25*
102771701 *15-3*
102772402 *13-9*
102774701 *13-9*
102775101 *14-3*
102817101 *4-37*, *13-9*
102817201 *13-9*
102838101 *13-7*
102838701 *7-7*, *7-9*
102838801 *7-7*, *7-9*
102838901 *7-7*, *7-9*
102839001 *7-7*, *7-9*
102839301 *7-7*, *7-9*
102841101 *7-7*, *7-9*
102844601 *7-7*, *7-9*
102844701 *7-7*, *7-9*
102845101 *3-7*
102845201 *13-11*
102845203 *13-11*, *13-13*
102845204 *13-13*
102845401 *13-9*
102846402 *13-9*
102847603 *1-77*
102852103 *5-19*
102863801 *13-9*
102865101 *9-7*
102869401 *4-11*, *4-13*
102873401 *13-11*, *13-13*
102882501 *1-59*, *1-61*
102883601 *1-15*, *3-15*, *3-17*
102886301 *15-3*
102886401 *15-3*
102886501 *15-3*
102886601 *15-3*
102891101 *5-17*, *5-19*
102894503 *4-7*
102902801 *15-3*
102913601 *1-85*
102915701 *13-7*
102931102 *13-9*
102938601 *14-3*
102938701 *14-3*
102938801 *14-3*
102938901 *14-3*
102939001 *14-3*
102939101 *14-3*
102939102 *14-3*
102947601 *1-35*, *1-37*
102951701 *14-3*
102967601 *3-7*
102977901 *9-3*
102980801 *13-11*, *13-13*
102980901 *13-11*, *13-13*
102989501 *1-29*
103180101 *1-107*, *4-11*, *4-13*
103182701 *1-19*
103182702 *1-19*
103196001 *1-39*, *1-41*, *1-43*
103196202 *8-5*
103198301 *4-11*
103198401 *7-15*
103201101 *1-31*
103205501 *3-13*, *7-15*
103218601 *13-5*
103234304 *3-15*, *3-17*
103245001 *4-7*
103262201 *1-31*
103306301 *9-3*
103347101 *7-7*, *7-9*
103347301 *7-7*, *7-9*
103347601 *7-7*, *7-9*
103347701 *7-7*, *7-9*
103347801 *7-7*, *7-9*
103347901 *7-7*, *7-9*
103348202 *4-11*
103348602 *4-13*
103354401 *4-11*
103354701 *6-11*, *6-15*, *6-19*, *6-23*
103372101 *9-3*
103372401 *9-7*
103397901 *13-9*
103449501 *4-25*
103477901 *6-29*
103484301 *4-7*, *4-9*
103487501 *1-29*
103496801 *7-27*
103497702 *13-15*
103502601 *6-13*
103502701 *6-21*
103502801 *6-17*, *6-25*
103507001 *6-13*, *6-17*, *6-21*, *6-25*
103508101 *8-7*
103510301 *13-7*
103510501 *13-15*
103538701 *1-55*
103539001 *1-55*
103540203 *1-19*
103541401 *4-37*
103575801 *1-55*
103582801 *15-3*
103601501 *6-3*
103628701 *6-13*
103628801 *6-21*
103628901 *6-17*, *6-25*
103653401 *6-3*
103653501 *6-3*, *6-11*, *6-15*, *6-19*, *6-23*
103653601 *6-11*, *6-15*, *6-19*, *6-23*
103700301 *4-23*
103717302 *6-13*, *6-17*, *6-21*, *6-25*
103717402 *6-13*, *6-17*, *6-21*, *6-25*
103724504 *6-7*, *6-9*
103724601 *6-9*
103724602 *6-7*
103724901 *6-9*
103754901 *1-35*
103756401 *9-7*
103804901 *4-25*
103829401 *6-7*
103832501 *4-35*
103832601 *4-35*
103865101 *5-5*, *5-7*
103865201 *16-3*
103867901 *6-21*
103879701 *12-15*
103879702 *12-13*
103882801 *8-5*, *8-7*
103886601 *12-5*
103902101 *13-3*
103902301 *13-3*
103902401 *13-3*
103905201 *9-3*
103924801 *7-3*, *7-5*
103942601 *13-15*
103943401 *13-3*
103944301 *9-3*
103951501 *12-23*

INDEX

103951801 *1-61*
103951802 *1-59*
103953301 *7-7*, *7-9*
103969701 *13-13*
103973901 *11-9*
103973902 *11-7*
103974002 *11-11*
103974102 *11-3*
103974201 *11-7*, *11-9*
103974401 *11-7*, *11-9*
103975301 *11-11*
103976101 *11-7*, *11-9*
103978001 *9-13*
103979301 *12-23*
103979401 *8-5*, *8-7*
103982201 *8-5*, *8-7*
103983501 *9-11*
103984601 *11-7*, *11-9*
103989501 *12-23*
103995001 *12-23*
103995901 *8-9*
103996201 *8-5*
104000901 *1-109*
104001201 *1-89*
104002101 *1-115*
104003501 *1-109*
104003901 *1-99*
104005301 *7-11*, *7-13*
104005901 *13-17*
104006101 *13-17*
104021701 *12-23*
104023501 *9-13*, *12-11*
104025101 *11-11*
104026801 *3-3*, *3-5*, *3-9*, *3-11*
104027101 *12-23*
104033601 *1-83*
104033701 *1-85*
105000301 *7-17*, *7-19*
105000401 *7-17*, *7-19*
105000501 *13-9*
105006501 *1-29*
105007001 *1-21*
105007002 *1-23*
105007402 *9-13*
105007403 *9-13*
105007701 *7-3*
105008001 *7-5*
105008101 *7-3*, *7-5*
105009101 *9-15*, *9-17*
105009401 *9-17*
105010001 *8-21*
105010101 *8-17*
105010201 *8-17*
105010301 *8-17*
105010401 *8-21*
105010501 *8-21*
105010601 *8-21*
105010701 *8-21*
105010801 *8-17*
105010901 *8-17*, *9-11*
105011001 *8-21*
105011101 *8-21*
105011201 *8-21*
105011301 *8-21*
105011401 *8-21*
105011501 *8-21*
105011601 *8-21*
105011701 *8-21*
105011801 *8-21*
105011901 *8-17*
105012001 *8-17*
105012101 *8-17*
105012201 *8-17*
105012301 *8-17*
105012401 *8-17*
105012501 *8-21*
105012601 *8-9*, *8-15*, *8-17*
105012701 *8-23*
105012801 *8-23*
105012901 *8-23*
105013001 *8-23*
105013101 *8-23*
105013201 *8-23*
105013301 *8-23*
105013401 *8-23*
105013501 *8-23*
105013601 *8-23*
105013701 *8-23*
105013801 *8-23*
105013901 *8-23*
105014001 *8-23*
105014101 *8-23*
105014201 *8-19*
105014301 *8-19*
105014401 *8-19*
105014501 *8-19*
105014601 *8-19*
105014701 *8-19*
105014801 *8-19*
105014901 *8-19*
105015001 *8-19*
105015101 *8-19*
105015201 *8-19*
105015301 *8-19*
105015401 *8-19*
105015501 *8-19*
105015601 *8-19*
105015701 *8-19*
105015801 *8-19*
105015901 *8-19*
105016001 *8-13*, *8-19*
105016101 *9-11*
105016201 *9-11*
105016301 *9-11*
105016401 *9-11*
105016501 *9-11*
105016701 *8-9*
105016801 *8-9*
105016901 *8-9*
105017001 *8-9*
105017101 *8-9*
105017201 *9-9*
105017301 *8-13*
105017401 *8-13*
105017501 *8-13*
105017601 *8-13*
105017701 *8-13*
105017801 *8-3*, *8-13*
105017901 *8-13*
105018001 *8-15*
105018101 *8-15*
105018201 *8-15*
105018301 *8-15*
105018401 *8-15*
105018501 *8-17*
105025001 *12-13*, *12-15*
105025101 *12-13*, *12-15*
105025201 *12-13*, *12-15*
105025301 *12-13*, *12-15*
105025401 *12-13*, *12-15*
105025501 *12-13*, *12-15*
105025601 *12-13*, *12-15*
105025701 *12-13*, *12-15*
105025801 *12-13*, *12-15*
105025901 *12-13*, *12-15*
105026001 *12-13*, *12-15*
105026101 *12-13*, *12-15*
105026201 *12-13*, *12-15*
105026301 *12-13*, *12-15*
105026401 *12-13*, *12-15*
105026501 *12-13*, *12-15*
105026601 *12-13*, *12-15*
105026701 *12-13*, *12-15*
105026801 *12-13*, *12-15*
105026901 *12-13*, *12-15*
105027001 *12-13*, *12-15*
105027101 *12-13*, *12-15*
105027201 *12-13*, *12-15*
105027301 *12-13*, *12-15*
105027401 *12-17*
105027501 *12-17*
105027601 *12-17*
105027701 *12-17*
105027801 *12-17*
105027901 *12-17*
105028001 *12-17*
105028101 *12-19*, *12-21*
105028201 *12-17*

INDEX

105028301 *12-13*, *12-15*
105028401 *12-17*
105028501 *12-13*, *12-15*
105028601 *12-17*
105028701 *12-17*
105028801 *12-17*
105028901 *12-17*
105029001 *12-17*
105029101 *12-17*
105029201 *12-17*
105029301 *12-21*
105029401 *12-21*
105029501 *12-19*, *12-21*
105029601 *12-21*
105029701 *12-21*
105029801 *12-19*, *12-21*
105029901 *12-19*, *12-21*
105030001 *12-13*, *12-15*
105030301 *12-19*, *12-21*
105030401 *12-19*, *12-21*
105030501 *12-19*, *12-21*
105030601 *12-19*, *12-21*
105030701 *12-13*, *12-15*
105030801 *12-19*, *12-21*
105030901 *12-17*
105031001 *12-21*
105034001 *1-19*
105034101 *4-11*
105034102 *4-13*
105034201 *1-19*
105034321 *1-11*
105034322 *1-11*
105034323 *1-11*
105034324 *1-11*
105034325 *1-11*
105034326 *1-11*
105034327 *1-11*
105034328 *1-11*
105034329 *1-11*
105034401 *1-15*
105034501 *1-15*
105034601 *1-15*
105034701 *1-15*
105034801 *1-15*
105034901 *1-17*
105035001 *1-17*
105035101 *1-49*
105035201 *1-49*
105035301 *1-49*
105035701 *1-19*
105035801 *1-47*
105036301 *12-3*
105036601 *1-57*
105036701 *1-15*
105036801 *4-3*
105037101 *4-13*
105037201 *7-25*
105037401 *7-17*, *7-19*
105037701 *12-3*
105038001 *12-3*
105038101 *12-3*
105038201 *12-3*
105038501 *12-3*
105038803 *12-5*
105039401 *12-3*
105039801 *12-3*
105039901 *12-3*
105040401 *12-3*
105040501 *12-3*
105040901 *12-7*
105043001 *9-15*
105043401 *9-5*
105043501 *9-3*
105043801 *9-5*
105043901 *9-5*
105044001 *9-3*
105044901 *9-7*
105046101 *3-3*, *3-5*, *3-9*, *3-11*
105049201 *1-19*
105049301 *1-19*
105049601 *13-5*
105060901 *1-35*
105062401 *1-29*
105063001 *1-29*
105063002 *1-29*
105063201 *1-39*, *1-41*, *1-43*
105063202 *1-39*, *1-41*, *1-43*
105063301 *1-39*
105063302 *1-41*
105063303 *1-43*
105063401 *1-39*, *1-41*, *1-43*
105063402 *1-39*, *1-41*, *1-43*
105063501 *12-13*
105063601 *12-19*
105064102 *1-33*
105064103 *1-33*
105064121 *1-27*
105064122 *1-27*
105064123 *1-27*
105064124 *1-27*
105064521 *1-25*
105064522 *1-25*
105064523 *1-25*
105064524 *1-25*
105066001 *12-19*, *12-21*
105066101 *12-19*, *12-21*
105066401 *1-49*, *1-51*
105068001 *4-15*, *4-17*, *4-19*, *4-21*
105068002 *4-15*, *4-17*, *4-19*, *4-21*
105068003 *4-15*, *4-17*, *4-19*, *4-21*
105068004 *4-15*, *4-17*, *4-19*, *4-21*
105068005 *4-15*, *4-17*, *4-19*, *4-21*
105068006 *4-15*, *4-17*, *4-19*, *4-21*
105068007 *4-15*, *4-17*, *4-19*, *4-21*
105068008 *4-15*, *4-17*, *4-19*, *4-21*
105068009 *4-15*, *4-17*, *4-19*, *4-21*
105068010 *4-15*, *4-17*, *4-19*, *4-21*
105068011 *4-15*, *4-17*, *4-19*, *4-21*
105068012 *4-15*, *4-17*, *4-19*, *4-21*
105068902 *6-31*, *6-33*
105069901 *1-35*
105072001 *1-39*
105072002 *1-41*
105072003 *1-43*
105073001 *9-5*
105073401 *4-3*
105074201 *6-13*, *6-17*, *6-25*
105074501 *1-7*
105074502 *1-7*
105075202 *13-9*
105075301 *8-11*
105078401 *1-29*
105078805 *2-5*
105078807 *2-7*
105078809 *2-3*
105078810 *2-3*
105078813 *2-5*
105078814 *2-7*
105078901 *2-3*, *2-5*, *2-7*
105079202 *2-5*, *2-7*
105079204 *2-3*
105079205 *2-5*, *2-7*
105079301 *2-3*
105079401 *2-3*
105079701 *2-5*
105079801 *2-7*
105081501 *7-3*, *7-5*
105081601 *7-3*, *7-5*
105081701 *4-15*
105081702 *4-15*
105081703 *4-15*
105081704 *4-15*
105081705 *4-15*
105081706 *4-15*
105081707 *4-15*
105081708 *4-15*
105081709 *4-15*
105081710 *4-15*
105081711 *4-15*
105081712 *4-15*
105081801 *4-19*
105081802 *4-19*
105081803 *4-19*
105081804 *4-19*
105081805 *4-19*
105081806 *4-19*
105081807 *4-19*
105081808 *4-19*

INDEX

105081809 *4-19*
105081810 *4-19*
105081811 *4-19*
105081812 *4-19*
105081901 *4-21*
105081902 *4-21*
105081903 *4-21*
105081904 *4-21*
105081905 *4-21*
105081906 *4-21*
105081907 *4-21*
105081908 *4-21*
105081909 *4-21*
105081910 *4-21*
105081911 *4-21*
105081912 *4-21*
105082001 *4-17*
105082002 *4-17*
105082003 *4-17*
105082004 *4-17*
105082005 *4-17*
105082006 *4-17*
105082007 *4-17*
105082008 *4-17*
105082009 *4-17*
105082010 *4-17*
105082011 *4-17*
105082012 *4-17*
105082101 *4-11*
105082301 *3-13*
105083301 *6-13*, *6-17*, *6-21*, *6-25*
105083701 *12-3*
105083801 *12-3*
105084701 *3-13*
105084801 *8-11*
105086101 *1-39*, *1-41*, *1-43*
105088501 *9-15*, *9-17*
105088601 *4-29*, *4-31*
105092601 *1-39*, *1-41*, *1-43*
105093301 *7-3*, *7-5*
105093501 *1-37*
105093601 *9-3*
105093701 *4-3*
105093801 *4-3*
105094001 *1-7*, *1-39*, *1-41*, *1-43*
105095101 *4-13*, *7-3*, *7-5*
105096101 *11-7*, *11-9*
105096401 *1-101*
105096501 *1-101*
105096901 *1-87*
105097001 *1-87*
105097101 *1-99*
105097301 *1-89*
105097401 *1-91*
105097501 *1-95*
105097601 *1-117*
105097701 *1-117*
105097801 *1-117*
105097901 *1-107*
105098001 *1-109*
105098002 *1-109*
105098101 *1-111*
105098201 *1-113*
105098301 *1-113*
105098401 *1-115*
105098501 *1-97*
105098502 *1-97*
105098701 *1-97*
105098801 *1-87*
105100401 *5-7*
105100601 *1-3*
105100801 *5-7*
105102301 *1-37*
105102601 *7-21*, *7-23*
105106101 *2-9*, *2-11*
105106201 *2-9*, *2-11*
105106301 *2-9*
105106302 *2-11*
105106501 *2-9*
105106502 *2-11*
105106601 *6-11*, *6-19*
105106702 *6-15*, *6-23*
105106801 *6-31*, *6-33*
105108201 *4-7*, *4-9*
105108301 *4-7*, *4-9*
105108401 *4-7*, *4-9*
105108801 *4-37*
105108901 *1-59*, *1-61*
105109101 *1-35*
105109201 *1-37*
105109501 *1-77*
105110801 *1-55*
105112401 *4-11*, *13-9*
105112501 *4-37*
105112601 *4-37*
105113301 *1-77*
105113302 *1-77*
105114805 *4-5*
105114806 *4-5*, *4-7*, *4-9*
105114807 *1-103*, *4-5*
105115002 *3-15*, *3-17*
105115005 *3-15*, *3-17*
105116301 *13-3*
105117601 *16-3*
105117602 *16-3*
105117603 *16-3*
105117604 *16-3*
105117605 *16-3*
105117606 *16-3*
105117607 *16-3*
105117701 *1-13*
105117702 *1-13*
105117703 *1-13*
105117704 *1-13*
105117705 *1-13*
105117706 *1-13*
105117707 *1-13*
105117708 *1-13*
105117709 *1-13*
105117710 *1-13*
105118601 *4-29*, *4-31*
105122105 *1-65*
105122205 *1-63*
105122807 *4-9*
105122808 *4-7*
105124001 *1-7*
105124101 *1-85*
105124201 *1-45*
105124202 *1-45*
105124301 *1-121*
105124302 *1-121*
105124401 *1-121*
105124501 *1-121*
105124701 *3-7*
105124901 *1-9*
105127201 *1-65*
105127202 *1-65*
105127302 *1-69*
105127401 *1-65*
105127402 *1-65*
105128001 *1-69*
105128101 *1-67*
105128201 *1-67*
105128801 *1-45*
105128802 *1-45*
105128901 *1-45*
105129001 *1-45*
105129501 *1-77*
105129601 *1-77*
105129901 *1-69*
105130001 *3-7*
105130101 *3-3*, *3-5*
105130301 *1-67*
105130302 *1-67*
105130501 *1-67*
105130601 *1-67*
105131001 *1-59*, *1-61*
105134601 *8-5*, *8-7*
105134901 *12-9*
105135101 *9-13*, *12-7*, *12-9*
105135201 *4-7*, *4-9*
105135802 *4-37*
105135901 *7-3*, *7-5*
105136001 *7-3*, *7-5*
105137102 *3-9*
105137103 *3-5*, *3-11*
105137106 *3-3*, *3-9*
105143301 *7-3*, *7-5*, *9-3*

INDEX

105143401 *1-119*
105144401 *9-13*, *12-11*
105144801 *4-35*
105145201 *13-7*
105145401 *1-85*
105145501 *1-85*
105146901 *4-25*
105147001 *4-25*
105148502 *1-77*
105148601 *1-77*
105148801 *1-77*
105148802 *1-77*
105149101 *5-9*
105149201 *5-9*
105149301 *8-5*, *8-7*
105152301 *4-11*
105152501 *3-15*
105152701 *3-17*
105153201 *3-15*, *3-17*
105153202 *3-15*, *3-17*
105153301 *3-15*, *3-17*
105153302 *3-15*, *3-17*
105155501 *4-31*
105155601 *4-29*
105156301 *1-5*
105156701 *1-5*
105156702 *1-5*
105158701 *1-125*
105158702 *1-123*
105160401 *1-71*
105160501 *1-75*
105160801 *1-71*
105160901 *1-71*
105161101 *1-71*
105161201 *1-75*
105161301 *1-75*
105161401 *1-71*
105161501 *1-73*
105161601 *1-73*
105161701 *7-3*, *7-5*, *7-7*, *7-9*
105161901 *16-3*
105163601 *3-3*, *3-5*
105163701 *3-3*, *3-5*, *3-7*
105165801 *4-7*, *4-9*
105166801 *13-17*
105166901 *13-17*
105167001 *13-17*
105167101 *13-17*
105167201 *13-5*
105168501 *13-17*
105168601 *13-17*
105169101 *1-57*
105170101 *1-45*
105170301 *1-59*
105170501 *1-61*
105173901 *13-5*
105175601 *1-101*
105175701 *1-101*
105175801 *1-101*
105175901 *1-101*
105176001 *1-101*
105176101 *1-101*
105176201 *1-101*
105176301 *1-101*
105176701 *1-93*
105176801 *1-93*
105176901 *1-117*
105177001 *1-99*
105177101 *1-99*
105177201 *1-93*
105177301 *1-87*
105177501 *1-87*
105177601 *1-87*
105177701 *1-87*
105177801 *1-87*
105177901 *1-99*
105178001 *1-99*
105178301 *1-95*
105178401 *1-95*
105178501 *1-117*
105178601 *1-117*
105178701 *1-117*
105178801 *1-117*
105178901 *1-117*
105179001 *1-107*
105179101 *1-107*
105179201 *1-107*
105179301 *1-107*
105179401 *1-107*
105179501 *1-107*
105179601 *1-107*
105179701 *1-107*
105179801 *1-107*
105179901 *1-107*
105180001 *1-109*
105180101 *1-109*
105180201 *1-109*
105180301 *1-111*
105180401 *1-111*
105180501 *1-111*
105180601 *1-111*, *1-113*, *1-115*
105180701 *1-111*
105180801 *1-111*
105180901 *1-113*
105181001 *1-113*
105181101 *1-113*
105181201 *1-115*
105181301 *1-113*
105181401 *1-113*
105181501 *1-113*
105181601 *1-115*
105181701 *1-89*
105181801 *1-89*
105181901 *1-89*
105182001 *1-89*
105182002 *1-89*
105182101 *1-89*
105182102 *1-89*
105182201 *1-89*
105182202 *1-89*
105182301 *1-89*
105182302 *1-89*
105182401 *1-89*
105182501 *1-89*
105182601 *1-89*
105182701 *1-89*
105182801 *1-89*
105182901 *1-89*
105183001 *1-89*
105183101 *1-91*
105183201 *1-91*
105183301 *1-91*
105183401 *1-91*
105183501 *1-107*
105183601 *1-113*
105183701 *1-109*
105183801 *1-115*
105185101 *4-33*
105185701 *1-63*, *1-77*
105185801 *1-63*, *1-77*
105186201 *6-31*
105186202 *6-31*
105186301 *6-33*
105186302 *6-33*
105188185 *1-31*, *6-31*, *6-33*
105190101 *7-9*
105190102 *7-7*
105190601 *4-7*, *4-9*
105190701 *4-7*, *4-9*
105192301 *1-65*
105192901 *1-65*
105193001 *1-65*
105193101 *1-69*
105193501 *1-59*, *1-61*
105194101 *1-57*
105194301 *1-29*
105194402 *1-65*
105194601 *1-65*
105194801 *1-63*, *1-77*
105194802 *1-63*
105194901 *1-63*
105194902 *1-63*
105195501 *13-9*
105196001 *1-35*, *1-37*
105196101 *1-65*
105196201 *1-65*
105197101 *1-57*
105197301 *1-39*, *1-41*, *1-43*

INDEX

105197401 *1-39*, *1-41*, *1-43*
105197402 *1-39*, *1-41*, *1-43*
105197601 *1-59*, *1-61*
105200401 *1-25*
105200702 *1-65*
105200802 *1-65*
105200901 *1-65*
105201001 *1-65*
105204401 *4-29*, *4-31*
105205201 *1-65*
105205301 *4-29*, *4-31*
105205401 *7-11*
105205501 *1-103*
105209601 *17-5*
105210201 *13-11*
105214101 *10-3*
105216602 *2-5*
105216604 *2-7*
105216701 *1-85*
105233701 *1-85*
105234002 *1-103*
105234102 *1-105*
105234501 *17-5*
105234502 *17-5*
105234801 *12-13*, *12-15*
105234901 *12-13*, *12-15*
105236301 *1-105*
105237301 *7-29*
105237601 *1-123*, *1-125*
105237701 *1-123*, *1-125*
105237801 *1-127*
105237802 *1-127*
105238001 *1-123*, *1-125*
105238101 *1-123*, *1-125*
105238201 *1-127*
105238301 *1-127*
105238401 *1-127*
105238402 *1-127*
105238501 *1-127*
105238502 *1-127*
105238603 *1-127*
105238604 *1-127*
105238701 *1-123*, *1-125*
105238801 *1-125*
105238802 *1-123*
105238901 *1-125*
105238902 *1-123*
105239001 *1-125*
105239002 *1-123*
105239101 *1-123*, *1-125*
105239201 *1-123*, *1-125*
105239301 *1-123*, *1-125*
105239401 *1-123*, *1-125*
105241001 *1-125*
105241002 *1-123*
105241101 *1-125*
105241102 *1-123*
105241201 *1-127*
105241301 *1-127*
105241401 *1-127*
105241501 *1-127*
105241601 *1-127*
105241602 *1-127*
105241701 *1-127*
105241702 *1-127*
105242801 *6-27*
105243001 *6-27*
105245801 *11-5*
105248201 *1-85*
105249901 *1-39*, *1-41*, *1-43*
105250501 *1-39*, *1-41*, *1-43*
105251901 *1-39*, *1-41*, *1-43*
105256701 *7-29*
105256801 *7-3*, *7-5*
105262401 *8-7*
105282901 *9-5*
105282902 *9-5*
105282903 *9-5*
105288801 *1-45*
105289301 *1-97*
105295301 *1-107*
105310301 *5-19*
47539338001 *7-13*
47539957001 *10-3*
47542195001 *5-11*, *5-21*, *5-23*
96704176 *12-3*
96705199 *1-65*, *12-7*, *12-9*
96741046 *8-5*, *8-7*

A

accelerator bracket and bearing assembly *5-5*, *5-7*
accelerator cable *9-13*
accelerator pedal adjustment tool *17-3*
accelerator pivot rod *5-5*, *5-7*
accelerator return spring *5-5*, *5-7*
accessory receptacle *4-5*
adapter
  air intake *9-11*
  cable (IQDM) *17-5*
adhesive, guide ring *17-3*
air cleaner assembly *9-15*, *9-17*
air deflector *8-11*
air filter *8-3*, *9-15*, *9-17*
air filter evacuator *9-15*, *9-17*
air intake adapter *9-11*
air intake hose *9-15*, *9-17*
AM1285701 *17-5*
anchor body *5-11*, *5-21*, *5-23*
anchor body kit *5-11*, *5-21*, *5-23*
anchor, piston *5-11*, *5-21*, *5-23*
A-plate strap *6-11*, *6-15*, *6-19*, *6-23*
A-plate, delta *6-11*, *6-15*, *6-19*, *6-23*
arbor *17-3*
arm
  governor *9-13*, *12-11*
armature *14-3*
assembly
  accelerator bracket and bearing *5-5*, *5-7*
  accelerator pivot rod *5-5*, *5-7*
  bearing, steering shaft *6-5*
  delta A-plate *6-11*, *6-15*, *6-19*, *6-23*
  drive hub *11-7*, *11-9*
  driven clutch *11-11*
  fuel cap *9-3*
  fuel pump *9-5*
  inner ball joint *6-3*
  kingpin *6-13*, *6-17*, *6-21*, *6-25*
  moveable-face *11-7*, *11-9*, *11-11*
  ratchet *5-3*, *5-5*, *5-7*
  secondary clutch weight *11-7*, *11-9*
  steering shaft *6-5*
axle *15-3*
axle shaft *12-19*, *12-21*
axle shaft oil seal *15-3*
axle tube *12-19*, *12-21*, *15-3*

B

backing plate, brake *5-11*, *5-21*, *5-23*
baffle
  crankcase *8-9*
balance shaft *8-23*
ball bearing *7-7*, *7-9*, *12-17*, *12-19*, *12-21*
ball joint *5-3*, *5-7*
ball stud *7-17*, *7-19*
ball, trailer hitch *1-83*
barrel, plastic *1-31*
battery
  12-volt, side-post *7-27*
  12-volt, top-post *7-29*
battery cap, 6-volt *13-13*
battery clamp *7-27*, *7-29*
battery condition indicator *4-11*
battery discharge machine *17-3*
battery HD, 6-volt, Trojan T145 *13-13*
battery hold-down *13-11*, *13-13*
battery hold-down rod *13-11*, *13-13*
battery terminal protector spray *17-3*
battery thermometer *17-3*
battery, top-post, wire, 4ga, B+ *7-3*, *7-5*
battery, top-post, wire, B- 4ga, *7-29*
bead, ferrite *4-25*
bearing *15-3*
  balance shaft *8-21*
  ball *7-7*, *7-9*, *12-17*, *12-19*, *12-21*
  ball (motor) *14-3*
  ball (steering pinion) *6-3*
  crankshaft *8-21*

INDEX

front wheel hub *6-29*
hub *6-29*
inner axle tube *15-3*
lower pinion (steering) *6-3*
pivot support *5-5*, *5-7*
steering shaft *6-5*
thrust *6-13*, *6-17*, *6-21*, *6-25*, *12-13*, *12-15*
bearing and oil seal remover *17-3*
bearing driver set *17-3*
bearing puller *17-3*
bearing puller wedge *17-3*
bearing seat *6-5*
bed clamp kit *1-71*
bed floor *1-57*
bed floor kit *1-57*
bed latch weldment *1-57*
bed lift actuator *1-61*
bed lift harness *1-59*, *1-61*
bed lift kit *1-61*
bed lift kit, electric *1-59*
bed lift weldment *1-59*, *1-61*
bed seal *1-29*
bellows *6-3*
belt, drive *11-3*, *11-5*
belt, starter/generator *7-11*, *7-13*
block, brake-mounting *5-3*
block, fuse *7-17*, *7-19*, *13-5*
block, terminal *4-5*, *13-9*
body, anchor *5-11*, *5-21*, *5-23*
bolt, U- *6-31*, *6-33*
boot, steering column *6-5*
boot, switch *7-15*, *13-7*
box
steering gear *6-3*
tool *1-129*
brace, trailer hitch *1-79*
bracket
accel.cable *9-13*, *12-7*, *12-9*
brake light switch *4-7*, *4-9*
carbon canister/ECU *9-7*
FNR cable *9-13*, *12-7*, *12-9*
governor *9-13*, *12-11*
horn *4-7*, *4-9*
mounting, starter/generator *8-5*, *8-7*
mounting, transaxle/exhaust *8-5*, *8-7*
shifter *12-3*
shock mounting, drv *6-31*, *6-33*
shock mounting, pas *6-31*, *6-33*
snubber *8-5*, *8-7*
stake side *1-77*
starter/generator adjusting *7-11*, *7-13*
steering column *6-5*
steering column mounting *6-5*
Tow/Run switch *7-15*
bracket, hinge, bed *1-55*
bracket,tailgate Lh *1-67*
bracket,tailgate Rh *1-67*
brake actuator kit *5-11*, *5-21*, *5-23*
brake backing plate *5-11*, *5-21*, *5-23*
brake cable *5-13*, *5-15*, *5-17*
brake cable equalizer *5-13*, *5-15*, *5-17*, *5-19*
brake cluster *5-11*, *5-21*, *5-23*
brake drum *5-11*, *5-21*, *5-23*
brake lever arm *5-11*, *5-21*, *5-23*
brake light switch bracket *4-7*, *4-9*
brake mounting block *5-3*
brake pedal *5-3*
brake pedal pad *5-3*
brake return spring *5-17*, *5-19*
brake shoe *5-11*, *5-21*, *5-23*
brake spring *5-11*, *5-21*, *5-23*
breather *12-13*, *12-15*, *15-3*
breather hose *9-11*
Brkt, Steering Stop, Drv, CA, LSV *6-27*
brush box assembly *14-3*
brush cover kit, starter/generator *7-7*, *7-9*
brush inspection port cover *7-7*, *7-9*
brush kit, motor *14-3*
brush rigging *14-3*
brush spring *7-7*, *7-9*, *14-3*
brush spring set *7-7*, *7-9*
brush spring, starter/generator *7-7*, *7-9*
brush terminal, starter/generator *7-7*, *7-9*
brush, motor *14-3*
bucket holder kit *1-75*
bulb,halogen *4-3*
bumper
drive unit (motor) *14-3*
rubber *5-3*
spring return *5-5*, *5-7*
bumper kit *1-3*
bumper,bedfloor *1-57*
bushing *1-59*, *1-61*, *7-17*, *7-19*, *11-7*, *11-9*, *12-3*
bronze *6-13*, *6-17*, *6-21*, *6-25*
nylon *1-67*, *5-3*
snap-in *1-67*
spindle *6-13*, *6-17*, *6-21*, *6-25*
steel *6-13*, *6-17*, *6-21*, *6-25*
urethane *1-55*, *6-11*, *6-13*, *6-15*, *6-17*, *6-19*, *6-21*, *6-23*, *6-25*, *6-31*, *6-33*
button, drive *11-11*
buzzer, reverse *4-11*, *4-13*

C

cab 2-point seat belt kit *1-101*
cab 3-point seat belt *1-101*
cab canopy kit *1-87*
cab liner *1-87*
cab mirror *1-97*
cab mirror lh *1-97*
cab overhead console *1-107*
cab rear window kit *1-117*
cab window screen *1-117*
cab windshield kit *1-99*
cab wiper kit *1-109*
cable
accelerator *9-13*
brake *5-13*, *5-15*, *5-17*
FNR shifter *12-5*
governor *9-13*
calibration test module *17-3*
cam
driven clutch *11-11*
electrical component box *7-17*, *7-19*
cam, engine *8-19*
camshaft *8-19*
camshaft o-ring *8-19*
canister, carbon, fuel tank *9-7*
canopy
short *1-39*
canopy kit *1-39*
cap
battery, 6-volt *13-13*
dust *13-5*
fuel, gas, ratchet *9-3*
key switch *4-15*, *4-17*, *4-19*, *4-21*
rubber *12-23*
cap,quick connector *13-9*
carbon canister *9-7*
card, safety first *17-5*
cargo box kit *1-65*
cargo box, corner,ds *1-65*
cargo box, front panel *1-65*
cargo box, side panel,ds,medium *1-65*
cargo box,corner,ps *1-65*
cargo box,side panel, ps,medium *1-65*
case
gear *15-3*
transaxle *12-13*, *12-15*
CE mark ferrite bead, TDK *4-25*
center shaft *12-17*
chain, timing *8-19*
charger bezel tool *17-3*
charging diode *7-25*
circuit breaker *13-7*
clamp
battery *7-27*, *7-29*
hose *9-3*, *9-7*, *9-15*, *9-17*
p- (fuel filter) *8-11*, *9-13*
clevis, upper delta *6-13*, *6-17*, *6-21*, *6-25*
clip
body trim *1-15*
retainer plate *8-17*
wheel cover *2-9*, *2-11*
clip, piston pin *8-23*
clip, score card *6-9*
cluster, brake *5-11*, *5-21*, *5-23*
clutch

INDEX

pin *12-17*
clutch cam installation tool *17-3*
clutch repair kit *11-11*
clutch tool kit *17-3*
clutch weight *11-7*, *11-9*
clutch, drive *11-7*, *11-9*
clutch, driven *11-11*
coil, ignition *8-13*
collar *12-17*
collet *8-19*
column, steering *6-5*
component mounting plate cover *13-9*
compression gauge *17-5*
compressor, piston ring *17-5*
compressor, valve spring *17-7*
connecting rod *8-23*
continuity tester *17-5*
controller diagnostic tool (CDT) *17-5*
controller diagnostic tool (CDT) cable *17-5*
cooling fan *8-9*
counter shaft *12-17*
cover
brush inspection port *7-7*, *7-9*
crankcase *8-21*
dust *5-11*, *5-21*, *5-23*, *6-29*
fan *8-9*
rocker switch hole *1-107*, *4-11*, *4-13*
steering column *6-5*
cover, rocker *8-17*
cover, valve *8-17*
cowl *1-11*
crankcase *8-21*
crankcase baffle *8-9*
crankcase cover *8-21*
crankshaft *8-23*
C-type stop ring *6-3*
cup, spring *5-5*, *5-7*
cushion, shock absorber *6-31*, *6-33*
cylinder head *8-17*

D

dash *1-19*
dc converter, 15A *4-23*
dc converter, 25A *4-25*
decal
4-gauge wire warning *3-7*
bed load warning *3-3*, *3-5*, *3-9*, *3-11*
crush area warning *1-31*, *3-3*, *3-5*, *3-7*, *3-9*, *3-11*, *3-13*
diode safety *3-13*
electrical cover safety *3-7*
engine warning *8-9*
filter log *13-17*
frame ground *3-13*
inspect log *13-17*
key switch *3-9*, *3-11*
nameplate *1-15*, *3-15*, *3-17*
on/off *3-3*, *3-5*, *3-9*, *3-11*, *4-11*, *4-13*
rotating parts *3-13*
run/service switch *3-13*, *7-15*
Tow/Run switch *3-7*
trailer hitch *1-79*, *1-81*, *3-7*, *3-13*
wheel cover *2-9*, *2-11*
young driver warning *3-5*, *3-11*
deflector
air *8-11*
deionizer *13-17*
cartridge *13-17*
delta A-plate *6-11*, *6-15*, *6-19*, *6-23*
delta A-plate sub-assembly *6-11*, *6-15*, *6-19*, *6-23*
diagnostic port *13-5*
differential *12-21*
limited-slip *12-19*
open *12-21*
differential drive unit *15-3*
differential gear *15-3*
differential gear set *12-21*
differential housing *15-3*
differential shaft *12-21*
diode *4-37*, *7-3*, *7-5*
diode, charging *7-25*
dipstick *8-21*
door,charger port *1-15*
door,glove box *1-19*
doors,soft,cab *1-91*
drain plug *8-21*, *12-13*, *12-15*
drain plug gasket *8-21*
drain plug, rubber *7-7*, *7-9*
drive belt *11-3*, *11-5*
drive button *11-11*
drive clutch *11-7*, *11-9*
drive clutch button *11-7*, *11-9*
drive clutch holder tool *17-3*
drive clutch hub puller *17-3*
drive clutch puller *17-3*
drive clutch spring *11-7*, *11-9*
drive clutch weight *11-7*, *11-9*
drive hub *11-7*, *11-9*
drive unit bumper *14-3*
driven clutch *11-11*
driven clutch button *11-11*
driven clutch cam *11-11*
driven clutch cam puller *17-3*
driven clutch puller plug *17-3*
driver, drive clutch *11-7*, *11-9*
drum, brake *5-11*, *5-21*, *5-23*
dry moly lubricant *17-5*
dust cap *13-5*
dust cover *5-11*, *5-21*, *5-23*, *6-29*

E

eccentric bolt *6-13*, *6-17*, *6-21*, *6-25*
E-clip *5-13*, *5-15*, *5-17*, *5-19*
ECU *9-9*
enclosure kit *1-121*
end cap, motor *14-3*
end, tie rod *6-11*, *6-15*, *6-19*, *6-23*
engine
air cleaner *9-15*, *9-17*
air deflector *8-11*
air filter *8-3*, *9-15*, *9-17*
air intake hose *9-15*, *9-17*
balance shaft *8-23*
bearing, balance shaft *8-21*
bearing, crankshaft *8-21*
breather hose *9-11*
cam *8-19*
camshaft *8-19*
camshaft O-ring *8-19*
connecting rod *8-23*
crankcase *8-21*
crankcase baffle *8-9*
crankcase cover *8-21*
crankcase plug *8-21*
crankshaft *8-23*
crankshaft key *8-23*
cylinder head *8-17*
dipstick *8-21*
drain plug gasket *8-21*
ECU *9-9*
exhaust valve *8-19*
fan *8-9*
fan housing *8-9*
flywheel *8-13*
fuel injector *9-9*
guide pin *8-21*
head gasket *8-17*
ignition coil *8-13*
insulator, throttle body *9-11*
intake valve *8-19*
oil drain plug *8-21*
oil filler tube *8-21*
oil filler tube O-ring *8-21*
oil level sensor *8-15*
oil seal *8-21*
piston *8-23*
piston pin *8-23*
piston pin clip *8-23*
piston ring set *8-23*
retainer plate *8-17*
retainer plate clip *8-17*
rocker arm *8-19*
rocker cover *8-17*
rocker cover gasket *8-17*
rocker shaft *8-19*

INDEX

spark plug *8-3*, *8-13*
temperature sensor *8-15*
throttle body *9-9*
timing chain *8-19*
timing chain guide *8-19*
timing chain sprocket *8-19*
timing chain tensioner *8-19*
valve collet *8-19*
valve guide *8-17*
valve seal *8-17*
valve spring *8-19*
valve spring retainer *8-19*
warning decal *8-9*
engine warning decal *8-9*
engine, EX40 *8-5*, *8-7*
equalizer pivot *5-13*, *5-15*
equalizer rod *5-13*, *5-15*, *5-17*, *5-19*
equalizer, brake cable *5-13*, *5-15*, *5-17*, *5-19*
exhaust extension *1-119*
exhaust valve *8-19*
extension, spring latch *1-57*

F

face, moveable *11-11*
fan
cooling *8-9*
fan cover *8-9*
fan housing *8-9*
fender,front,lh *1-15*
fender,front,rh *1-15*
fender,inner *1-47*
fender,rear *1-49*
ferrite bead (CE), TDK *4-25*
field coil housing *7-7*, *7-9*
filter
air *8-3*, *9-15*, *9-17*
fuel *9-5*
fitting, thread-forming grease *6-13*, *6-17*, *6-21*, *6-25*
flasher, turn signal, 12-volt *4-7*
flat trim kit *1-63*
floor mat *1-19*
floormat, 4 pass, rear *1-31*
flywheel *8-13*
fnr shaft *12-3*
FNR shift lever *12-7*, *12-9*
FNR shifter base *12-3*
FNR shifter cable *12-5*
foot deck *1-31*
fops,cab *1-87*
frame
corner cap *1-29*
frame and field, motor *14-3*
frame and field, starter/generator *7-7*, *7-9*
frame weldment, front drop *1-23*
frame weldment,front *1-21*
frame,bed *1-57*
front spring retainer plate *6-13*, *6-17*, *6-21*, *6-25*
fuel filter *9-5*
Fuel Filter Kit *9-5*
fuel injector *9-9*
fuel line *9-7*
Fuel Module, Hold-Down Ring *9-5*
Fuel Pump *9-5*
fuel pump *9-5*
fuel tank *9-3*
fuse
10-amp *1-105*, *4-7*, *4-9*, *7-3*, *7-5*, *7-17*, *7-19*
15-amp *13-5*
1-amp *13-5*
20-amp *4-5*, *13-5*
2-amp *7-3*, *7-5*, *13-5*
30-amp *13-5*
5-amp *7-3*, *7-5*
fuse block *7-17*, *7-19*, *13-5*
fuse, mini, 7.5A *4-5*
fuse, mini,10A *4-5*, *4-7*, *4-9*
fuse, mini,15A *1-103*, *4-5*

G

gasket *12-13*, *12-15*
cover, rocker *8-17*
cover, valve *8-17*
drain plug *8-21*
insulator *9-11*
liquid *15-3*, *17-5*
plug *15-3*
gasket, head *8-17*
gauge, battery condition *4-11*
gauge, compression *17-5*
gear
17 tooth *12-17*
34 tooth *12-17*
52 tooth *12-17*
60 tooth *12-19*, *12-21*
62 tooth *12-17*
differential *15-3*
differential idler *15-3*
differential output *15-3*
governor *12-13*, *12-15*
governor, 34 tooth *12-17*
set, differential *12-21*
gear yoke *17-5*
gearcase *15-3*
governor arm *9-13*, *12-11*
governor cable *9-13*
governor gear shaft *12-13*, *12-15*
governor shaft *12-13*, *12-15*
grill *1-15*
grip, pencil *6-9*
grip, tilt latch hand *1-57*
grommet *9-3*
guide
valve *8-17*
guide pin *8-21*, *12-13*, *12-15*
guide ring adhesive *17-3*
guide, timing chain *8-19*

H

handle, FNR *12-3*
handle, tee *1-99*
harness, main *7-3*, *7-5*
harness, wire *4-9*, *13-9*
harness, wire, gas engine-ECU *7-3*, *7-5*
harness, wire, gas FNR connector *7-3*, *7-5*
harness, wire, gas instr. panel *4-13*, *7-3*, *7-5*
harness,brake pedal switch *4-7*, *4-9*
harness,taillight *4-7*, *4-9*
head gasket *8-17*
head, cylinder *8-17*
headband, sealed, motor *14-3*
headband, vented, motor *14-3*
headlight *4-3*
headlight bezel,lh *1-17*
headlight bezel,rh *1-17*
headlight guard kit *1-5*
headlight,led *4-3*
heater,defogger *4-37*
heater,defogger kit *4-37*
hill brake rod *5-3*
hill brake weld assembly *5-3*
hinge pin *1-77*
hip restraint *1-29*
hitch, trailer *1-79*
hitch, trailer, ball *1-83*
hold-down rod, battery *13-11*, *13-13*
hold-down, battery *13-11*, *13-13*
holder, license plate *1-9*
hole plug *4-11*
horn bracket *4-7*, *4-9*
hose
air intake *9-15*, *9-17*
engine breather *9-11*
fuel *9-7*
vent *9-7*
hour meter *13-7*
hour meter bracket *13-7*
housing
3-pin *14-3*
differential *15-3*
fan *8-9*
field coil *7-7*, *7-9*
hub *6-29*, *12-23*
hub bearing *6-29*
hydrometer *17-5*

INDEX

I

idler gear, differential *15-3*
ignition coil *8-13*
indicator, battery condition *4-11*
indicator, charger *4-11*
inner frame snubber *8-5*, *8-7*
input shaft *12-17*, *15-3*
instrument panel *4-13*
instrument panel wire harness,electirc vehicle *4-11*
instrument panel,electric vehicle *4-11*
insulating washer *14-3*
insulator *9-11*
insulator gasket *9-11*
insulator, motor terminal *14-3*
intake valve *8-19*
intermediate shaft *15-3*
internal retaining ring pliers *17-5*

J

joint
- ball *5-3*, *5-7*
- steering *6-21*

K

key
- driven clutch *11-11*
- square *11-11*

key switch cap *4-15*, *4-17*, *4-19*, *4-21*
key switch, uncommon *4-15*, *4-17*, *4-19*, *4-21*
key,crankshaft *8-23*
keyswitch,uncommon *4-15*
kingpin *6-13*, *6-17*, *6-21*, *6-25*
kit
- 3-pin housing *14-3*
- accelerator pivot rod *5-5*, *5-7*
- anchor body *5-11*, *5-21*, *5-23*
- brake actuator *5-11*, *5-21*, *5-23*
- brake cable *5-13*, *5-15*
- brake pedal *5-3*
- brake shoe *5-11*, *5-21*, *5-23*
- brake shoe retainer *5-11*, *5-21*, *5-23*
- clutch repair *11-11*
- controller diagnostic tool (CDT) *17-5*
- deflector, air *8-11*
- drive clutch button *11-7*, *11-9*
- drive clutch weight *11-7*, *11-9*
- driven clutch button *11-11*
- equalizer, brake *5-13*, *5-15*
- hand pump, SPWS *13-17*
- motor brush *14-3*
- motor brush lead assembly *14-3*
- motor brush spring *14-3*
- motor speed sensor *14-3*
- park brake latch *5-3*
- park brake pedal *5-3*
- rear receiver hitch *1-81*
- shock absorber cushion *6-31*, *6-33*
- shoe retainer *5-11*, *5-21*, *5-23*
- steering column mounting bracket *6-5*
- trailer hitch *1-79*

Kit, Horn/Tail Light/Turn *4-9*

L

ladder rack kit *1-73*
lamp,stop,turn,tail *4-7*, *4-9*
latch *1-19*
latch plate *1-55*
latch, park brake *5-3*
leaf blower holder kit *1-71*
lever
- transaxle shift *12-7*, *12-9*

license frame kit *1-9*
license plate *1-9*
license plate holder *1-9*
light
- oil *4-13*
- strobe *1-115*
- water quality *13-17*

light, strobe *4-29*, *4-31*
limit switch *4-7*, *4-9*, *7-19*, *7-21*, *7-23*
limiter
- voltage *1-105*, *4-27*

line, fuel *9-7*
liquid gasket *15-3*, *17-5*
low oil warning light *4-13*
lubricant, dry moly *17-5*
lubricant, moly-teflon *14-3*, *17-5*
lug nut *2-3*, *2-5*, *2-7*
lug stud *12-23*, *15-3*

M

magnet, speed sensor *14-3*
main harness *7-3*, *7-5*
mat, floor *1-19*
mat, floor, 4 pass, rear *1-31*
MCOR *13-3*
meter, hour *13-7*
meter, volt ohm *17-7*
mirror *1-97*
mirror,exterior kit *1-45*
module
- calibration test *17-3*

moly-teflon lubricant *17-5*
motor
- 48-volt IQ Plus *14-3*

motor brush *14-3*
motor brush kit *14-3*
motor brush lead assembly kit *14-3*
motor brush spring *14-3*
motor bumper *14-3*
motor end cap *14-3*
motor frame and field *14-3*
motor headband, sealed *14-3*
motor headband, vented *14-3*
motor magnet, speed sensor *14-3*
motor speed sensor *14-3*
motor speed sensor kit *14-3*
motor terminal and lead assembly *14-3*
motor terminal insulator *14-3*
mounting block, brake *5-3*
moveable-face *11-7*, *11-9*, *11-11*

N

nameplate decal *1-15*, *3-15*, *3-17*
nut, lug *2-3*, *2-5*, *2-7*

O

oil filler tube *8-21*
oil level sensor *8-15*
oil seal *8-21*, *12-13*, *12-15*
oil warning light, low *4-13*
O-ring *8-19*, *8-21*
O-ring Kit, Fuel Module *9-5*
O-Ring, Fuel Module *9-5*

P

pad
- brake pedal *5-3*
- park brake *5-3*
- thermal *7-25*

paint, underbody (black) *17-5*
paint,touch-up *1-13*
park brake latch *5-3*
park brake pedal *5-3*
park brake rod sleeve *5-3*
park brake spacer *5-3*
park brake torsion spring *5-3*
pawl *5-3*
p-clamp (fuel filter) *8-11*, *9-13*
pedal, brake *5-3*
pedal, park brake *5-3*
pencil grip *6-9*
pin
- bow tie locking *5-13*, *5-15*, *5-17*, *5-19*
- clevis *5-13*, *5-15*, *5-17*, *5-19*
- differential *12-21*
- guide *8-21*, *12-13*, *12-15*
- input shaft *12-17*
- piston *8-23*

pin, hinge *1-77*
pinion, steering *6-3*
piston *8-23*
piston anchor *5-11*, *5-21*, *5-23*
piston pin *8-23*

INDEX

piston pin clip *8-23*
piston ring *8-23*
piston ring compressor *17-5*
piston ring pliers *17-5*
piston ring set *8-23*
pivot support bearing *5-5*, *5-7*
plate
  front spring retainer *6-13*, *6-17*, *6-21*, *6-25*
  license *1-9*
  mounting, CVT, center *8-5*, *8-7*
  mounting, engine/axle *8-5*, *8-7*
  retainer *8-17*
plate, Tow/Run switch *13-7*
pliers
  internal retaining ring *17-5*
  piston ring *17-5*
  retaining ring *17-5*
plug
  drain *12-13*, *12-15*
  driven clutch puller *17-3*
  hole *4-11*
  oil drain *8-21*
  rubber drain *7-7*, *7-9*
  rubber, crankcase *8-21*
  spark *8-3*, *8-13*
port, diagnostic *13-5*
press weldment *17-3*
prop rod *1-55*
prop rod track *1-55*
protector spray, battery terminal *17-3*
puller
  bearing *17-3*
  drive clutch *17-3*
  drive clutch hub *17-3*
  driven clutch cam *17-3*
  seal *17-5*
pulley
  starter-generator *7-7*, *7-9*
  v-belt *7-7*, *7-9*
pump
  fuel *9-5*

R

race, front hub bearing *6-29*
rack guide pressure spring *6-3*
rack, steering *6-3*
range picker adapter *1-85*
ratchet, park brake *5-3*, *5-5*, *5-7*
receiver hitch *1-81*
receptacle, accessory *4-5*
reflector, yellow *4-35*
reflector,amber *4-3*
reflector,red *4-35*
reflector,red,rectangle *4-35*
refractometer *17-5*
regulator, voltage *7-17*, *7-19*
relay *13-9*
relay 48v *4-11*, *13-9*
relay, 12-volt *1-105*, *4-7*, *4-9*
remover, bearing and oil seal *17-3*
retainer
  accelerator pedal spring *5-5*, *5-7*
  brake shoe *5-11*, *5-21*, *5-23*
  shock absorber cushion *6-31*, *6-33*
  spring *6-31*, *6-33*
  valve spring *8-19*
retainer plate *8-17*
retaining ring *6-5*
retaining ring pliers *17-5*
return spring bumper *5-5*, *5-7*
reverse buzzer *4-11*, *4-13*
ring
  C-type stop *6-3*
  piston *8-23*
  retaining *6-5*, *7-17*, *7-19*, *11-7*, *11-9*, *11-11*, *12-13*, *12-15*, *12-23*
  snap *6-3*
  spiral backup *11-7*, *11-9*
rivet, blind push *13-9*
rocker arm *8-19*
rocker cover *8-17*
rocker cover gasket *8-17*
rocker shaft *8-19*
rocker switch *1-59*, *1-61*, *4-11*
rocker switch (lights) *4-11*, *4-13*
rod
  accelerator pivot *5-5*, *5-7*
  battery hold-down *13-11*, *13-13*
  connecting *8-23*
  equalizer *5-13*, *5-15*, *5-17*, *5-19*
  hill brake *5-3*
  prop *1-55*

S

safety first card *17-5*
score card clip *6-9*
score card plate *6-9*
seal
  lip *15-3*
  oil *8-21*, *12-13*, *12-15*, *15-3*
  steering pinion dust *6-3*
  valve *8-17*
seal puller *17-5*
seal, bed *1-29*
sealant *15-3*
seat bottom *1-25*
seat strap *1-25*
seat, bearing *6-5*
seatback *1-27*
seatback weldment *1-29*
select shaft *12-13*, *12-15*
sensor
  oil level *8-15*
  temperature *8-15*
sensor, motor speed *14-3*
shaft
  axle *12-19*, *12-21*
  balance *8-23*
  center *12-17*
  counter *12-17*
  differential *12-21*
  governor *12-13*, *12-15*
  governor gear *12-13*, *12-15*
  input *12-17*, *15-3*
  intermediate *15-3*
  rocker *8-19*
  select *12-13*, *12-15*
  shift *12-17*
  steering column *6-5*
shift lever *12-7*, *12-9*
shift shaft *12-3*, *12-17*
shifter bracket *12-3*
shifter handle *12-3*
shifter, base *12-3*
shifter, FNR *12-3*
shock absorber *6-31*, *6-33*
shock absorber cushion *6-31*, *6-33*
shock absorber cushion retainer *6-31*, *6-33*
shock extension *6-33*
shock mounting bracket, drv *6-31*, *6-33*
shock mounting bracket, pas *6-31*, *6-33*
shoe retainer kit *5-11*, *5-21*, *5-23*
shoe, brake *5-11*, *5-21*, *5-23*
sleeve *1-55*, *6-31*, *6-33*, *12-13*, *12-15*
  delta A-plate *6-11*, *6-15*, *6-19*, *6-23*
  park brake rod *5-3*
snap ring *6-3*
snubber bracket *8-5*, *8-7*
snubber, inner frame *8-5*, *8-7*
solenoid *13-9*
solenoid, 12-volt *4-37*, *7-17*, *7-19*
spacer *12-13*, *12-15*, *12-17*, *13-11*, *13-13*
  accelerator pivot rod *5-5*, *5-7*
  park brake *5-3*
spark plug *8-3*, *8-13*
speed sensor *14-3*
speed sensor magnet *14-3*
speed sensor, motor *14-3*
spindle assembly *6-13*, *6-17*, *6-21*, *6-25*
spiral backup ring *11-7*, *11-9*
spray, battery terminal protector *17-3*
spring *12-13*, *12-15*
  accelerator return *5-5*, *5-7*
  brake *5-11*, *5-21*, *5-23*
  brake return *5-17*, *5-19*
  brush *7-7*, *7-9*, *14-3*
  compression *6-9*
  drive button *11-7*, *11-9*

INDEX

drive clutch *11-7*, *11-9*
driven clutch *11-11*
extension *1-57*
park brake torsion *5-3*
rack guide pressure *6-3*
steering shaft compression *6-5*
valve *8-19*
spring cup *5-5*, *5-7*
spring mounting plate *6-13*, *6-17*, *6-21*, *6-25*
spring retainer *6-31*, *6-33*, *8-19*
spring, motor brush *14-3*
spring,leaf *6-13*
spring,tailgate *1-67*
SPWS manifold *13-15*
stake side *1-77*
stake side bracket *1-77*
stake side kit *1-77*
stake side panel,front *1-77*
stake side panel,lh *1-77*
stake side panel,rh *1-77*
stake side trim kit *1-77*
stake side trim, center *1-77*
stake side trim, rh *1-77*
stake side trim,lh *1-77*
starter/generator *7-7*, *7-9*
starter/generator brush cover kit *7-7*, *7-9*
starter/generator brush spring *7-7*, *7-9*
starter/generator brush terminal *7-7*, *7-9*
starter/generator frame and field *7-7*, *7-9*
starter/generator pulley *7-7*, *7-9*
static grip kit *1-71*
steel bushing *6-13*, *6-17*, *6-21*, *6-25*
steering column *6-5*
steering column bearing press tool *17-7*
steering column retaining ring tool *17-7*
steering gear box *6-3*
steering joint *6-21*
steering pinion *6-3*
steering pinion dust seal *6-3*
steering rack *6-3*
steering shaft *6-13*, *6-17*, *6-25*
steering shaft assembly *6-5*
steering shaft compression spring *6-5*
steering wheel puller tool *17-7*
strap, A-plate *6-11*, *6-15*, *6-19*, *6-23*
strap, seat *1-25*
strobe light *1-115*, *4-29*, *4-31*
strobe light,post mounted *4-29*, *4-31*
strut,canopy front *1-39*, *1-41*, *1-43*
stud
exhaust mounting
engine
exhaust mounting stud *8-17*
intake mounting
engine
intake mounting stud *8-17*, *9-11*
lug *12-23*, *15-3*
stud, ball *7-17*, *7-19*
support yoke (steering) *6-3*
swicth plate cover *4-29*, *4-31*
switch
key, uncommon *4-15*, *4-17*, *4-19*, *4-21*
light rocker *4-11*, *4-13*
limit *4-7*, *4-9*, *7-19*, *7-21*, *7-23*
rocker *1-59*, *1-61*, *4-11*
Tow/Run *13-7*
turn signal *4-7*
switch assembly *4-29*, *4-31*
switch rubber boot *7-15*, *13-7*
switch, toggle *7-15*

T

12-volt solenoid *4-37*, *7-17*, *7-19*
tachometer *17-7*
tailgate *1-67*
tailgate handle *1-67*
tailgate latch,lh *1-65*
tailgate latch,rh *1-65*
tailgate teather kit *1-69*
tailskirt *1-49*
tank, fuel *9-3*
tee handle *1-99*
temperature sensor *8-15*
tensioner, timing chain *8-19*
terminal block *4-5*, *13-9*
tester, continuity *17-5*
thermal pad *7-25*
thermometer, battery *17-3*
thread-forming grease fitting *6-13*, *6-17*, *6-21*, *6-25*
throttle body *9-9*
thrust bearing *6-13*, *6-17*, *6-21*, *6-25*
tie down kit *1-71*
tie rod *6-11*, *6-15*, *6-19*, *6-23*
tie rod end *6-11*, *6-15*, *6-19*, *6-23*
tie wrap *1-103*, *1-105*, *4-37*, *5-13*, *5-15*, *6-3*, *6-5*, *7-17*, *7-19*, *12-5*
tilt latch hand grip *1-57*
timing chain *8-19*
timing chain guide *8-19*
tire *2-3*
toggle switch *7-15*
tool
accelerator pedal adjustment *17-3*
belt tensioning, starter/generator *17-7*
charger bezel *17-3*
clutch cam installation *17-3*
drive clutch holder *17-3*
steering column bearing press *17-7*
steering column retaining ring *17-7*
steering wheel puller *17-7*
transaxle axle seal *17-7*
transaxle pinion seal *17-7*
transmission *17-7*
tool kit, clutch *17-3*
tool rack kit *1-71*
toolbox *1-129*
toolbox kit *1-73*
touch-up paint *17-5*
Tow/Run switch *13-7*
Tow/Run switch bracket *7-15*
Tow/Run switch plate *13-7*
track, prop rod *1-55*
trailer hitch *1-79*
trailer hitch ball *1-83*
trailer hitch brace *1-79*
transaxle (Electric Vehicle) *15-3*
transaxle axle seal tool *17-7*
transaxle pinion seal tool *17-7*
transaxle, limited-slip (Gas Vehicle) *12-13*
transaxle, open-diff (Gas Vehicle) *12-15*
transmission tool *17-7*
tube
axle *12-19*, *12-21*, *15-3*
oil filler *8-21*
turn signal switch *4-7*

U

U-bolt *6-31*, *6-33*
upper delta clevis *6-13*, *6-17*, *6-21*, *6-25*
urethane bushing *1-55*, *6-11*, *6-13*, *6-15*, *6-17*, *6-19*, *6-21*, *6-23*, *6-25*, *6-31*, *6-33*

V

valve *9-15*, *9-17*
exhaust *8-19*
intake *8-19*
valve collet *8-19*
valve cover *8-17*
valve cover gasket *8-17*
valve guide *8-17*
valve seal *8-17*
valve spring *8-19*
valve spring compressor *17-7*
valve stem *2-3*, *2-5*, *2-7*
vent
fuel tank *9-3*
transaxle *12-13*, *12-15*
vent, barb *9-7*
vent,door,cab *1-95*
volt ohm meter *17-7*
voltage limiter *1-105*, *4-27*
voltage regulator *7-17*, *7-19*

W

warning beacon,cab *1-115*
warning light, low oil *4-13*

INDEX

washer, insulating *14-3*
washer,cab *1-111*
water quality light *13-17*
wedge, bearing puller *17-3*
weight
  clutch *11-7*, *11-9*
  secondary clutch *11-7*, *11-9*
weldment
  governor bracket *9-13*, *12-11*
  press *17-3*
weldment, receiver hitch *1-81*
Wheel *2-5*
wheel and tire,front *2-5*
wheel cover *2-9*, *2-11*
window,slider,cab *1-117*
windshield kit,hinged *1-35*
windshield kit,non-hinged *1-37*
windshield,hinged *1-35*
windshield,non-hinged *1-37*
wire
  green, starter/generator *7-3*, *7-5*, *7-7*, *7-9*
  ground, fuel tank *7-3*, *7-5*, *9-3*
wire harness *4-9*, *4-13*, *7-3*, *7-5*, *13-9*
work light,front,cab *1-113*
work light,rear,cab *1-113*
wrap, tie *1-103*, *1-105*, *4-37*, *5-13*, *5-15*, *6-3*, *6-5*, *7-17*, *7-19*, *12-5*

Y

yoke, gear *17-5*
yoke, support (steering) *6-3*

Ingersoll Rand
Industrial Technologies

Club Car®

Club Car, Inc.
P.O. Box 204658
Augusta, GA 30917-4658
USA

Web www.clubcar.com
Phone 1.706.863.3000
1.800.ClubCar
Int'l +1 706.863.3000
Fax 1.706.863.5808