Utility Vehicle 2100

Bobcat®

Operation & Maintenance Manual

S/N 522713000 AND ABOVE

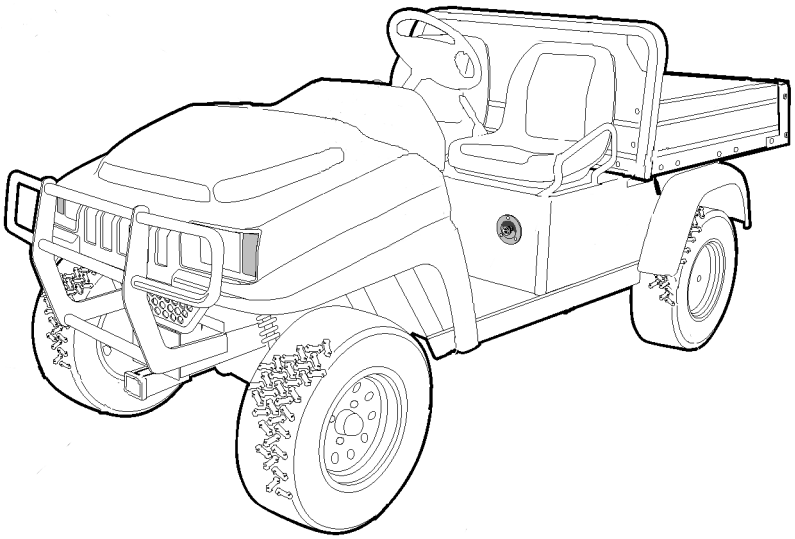

6987392 (04-09)

Printed in U.S.A.

© Bobcat Company 2009

NOTICE

The Bobcat Utility Vehicle Limited Warranty appears on the last pages of this manual. No other warranties, express or implied, are contained herein. Your authorized representative checked the vehicle before it was delivered to you and will provide you a copy of the completed vehicle warranty registration form.

This manual contains proprietary information that is protected by copyright. All rights are reserved. No part of this manual may be photocopied, reproduced, or translated to another language without the written consent of Bobcat.

The information contained in this document is subject to change without notice.

Bobcat reserves the right to make design changes to vehicles without obligation to make these changes on units previously sold.

These vehicles do not conform to Federal Motor Vehicle Safety Standards for automobiles or to FMVSS 500 for low-speed vehicles, and are not equipped for operation on public streets, roads, or highways.

Bobcat Company
P.O. Box 128
Gwinner, ND 58040-0128
www.bobcat.com

FOREWORD

Thank you for choosing Bobcat. You have chosen the finest utility vehicle on the market; the vehicle most widely recognized as the industry leader in vehicle efficiency and long-lasting value. Please protect your investment and ensure that your Bobcat vehicle provides years of reliable, superior performance by reading and following the maintenance instructions in this manual.

Your comfort and safety are important to us, so we urge you to read and follow the step-by-step operating instructions and safety precautions in this manual. These instructions must be followed in order to avoid the risk of severe personal injury. If you rent or loan your vehicle to others, we recommend that you ask them to read this manual before they operate the vehicle.

Bobcat products are backed by a customer support system designed to offer you fast, courteous service. In the event that your Bobcat vehicle needs repairs or service, we recommend that your local authorized Bobcat representative perform them. For the name and address of the Bobcat representative nearest you, logon to our web site at www.bobcat.com. If you would prefer to write to us, direct your letter to: Bobcat Company, P.O. Box 128, Gwinner, ND, 58040-0128, USA. Your local authorized Bobcat representative can also provide technical advice, parts, and service manuals.

We hope you will consider this operation and maintenance manual a permanent part of your Bobcat vehicle. If you sell the vehicle, please include the manual so that the next owner will have the important operating, safety, and maintenance information it contains.

TABLE OF CONTENTS

Safety Decal and Feature Identification 4
Practice Safety 7
Proposition 65 – State of California 7
Safety Details 8
General Warnings 9
General Information 10
Model Identification 10
Controls and Indicators 11
Seat Latch and Adjustment 15
Pre-Operation and Daily Safety Checklist 15
Driving Instructions 17
Bed Latch and Prop Rod 19
Front Shock Absorbers 20
Loading and Unloading 20
Towing with the Vehicle 21
Transporting on a Trailer 22
Storage 22
Maintenance 26
Periodic Service Schedule 27
Periodic Lubrication Schedule 29
Master Cylinder 30
Engine Oil 31
Fueling Instructions 35
Battery 36
Cleaning the Vehicle 38
Accessories 39
Subsequent Owner Registration 39
Vehicle Specifications 40

SAFETY DECAL AND FEATURE IDENTIFICATION

The following pages contain safety decal and feature identification information. For detailed information on specific features, read the appropriate section in this manual.

2100

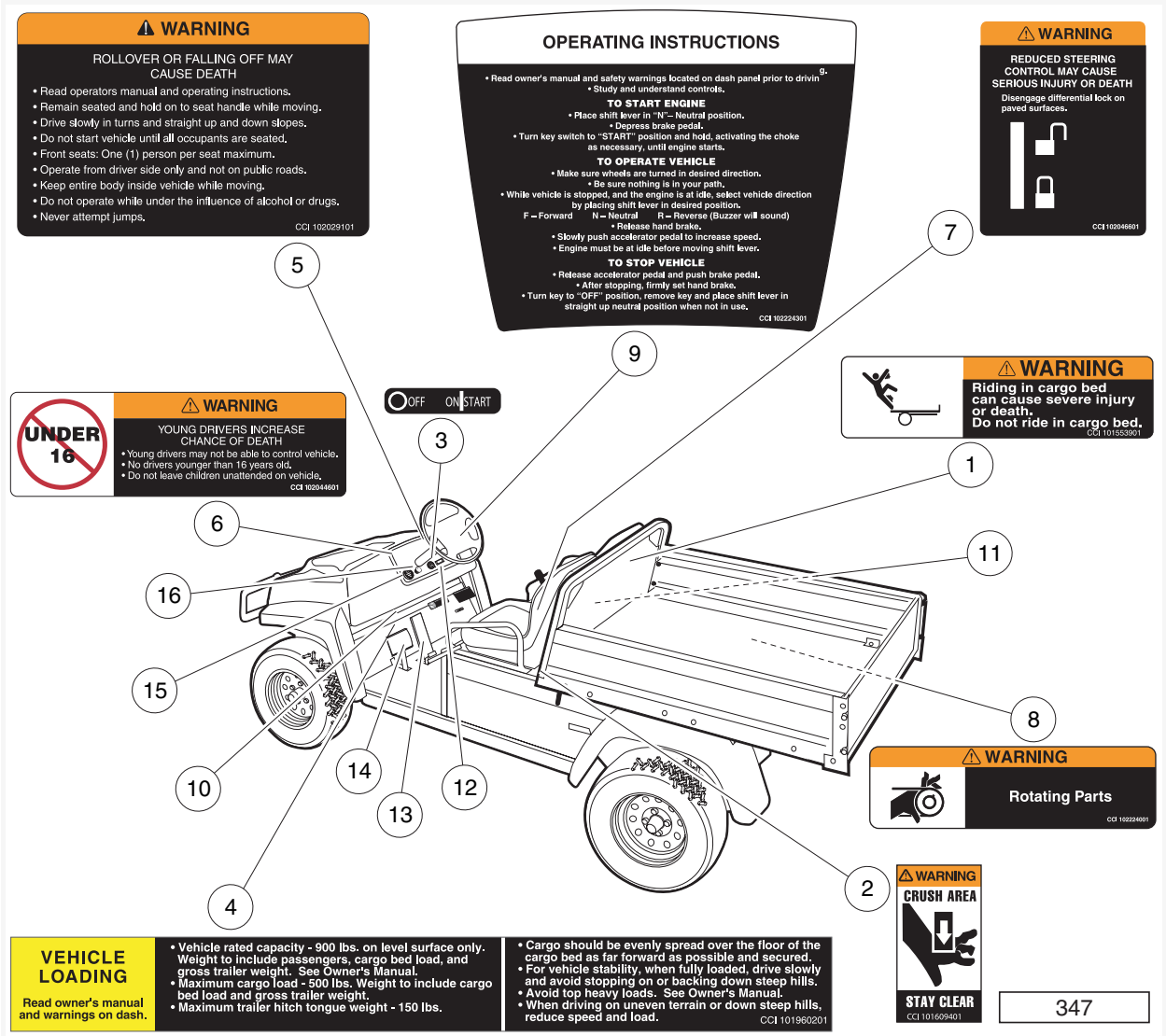

1	101553901	Decal, Bed Loading Warning (on cargo bed or seat back)	11		Fuel Shut-Off Valve
2	101609401	Decal, Crush Area Warning (behind seat, near cargo bed)	12		Low Oil Warning Light
3	101825102	Decal, On/Off/Start Key Switch (above key switch)	13		Accelerator Pedal
4	101960201	Decal, Vehicle Loading Instructions (below instrument panel)	14		Brake Pedal
5	102029101	Decal, Rollover Warning (on instrument panel)	15		Fuel Gauge
6	102044601	Decal, Young Driver Warning (on instrument panel)	16		Light Switch
7	102046601	Decal, Differential Lock Warning (between seats)	17		
8	102224001	Decal, Rotating Parts Warning (on frame)	18		
9	102224301	Decal, Operating Instructions (on steering wheel)	19		
10		Serial Number	20		

2100

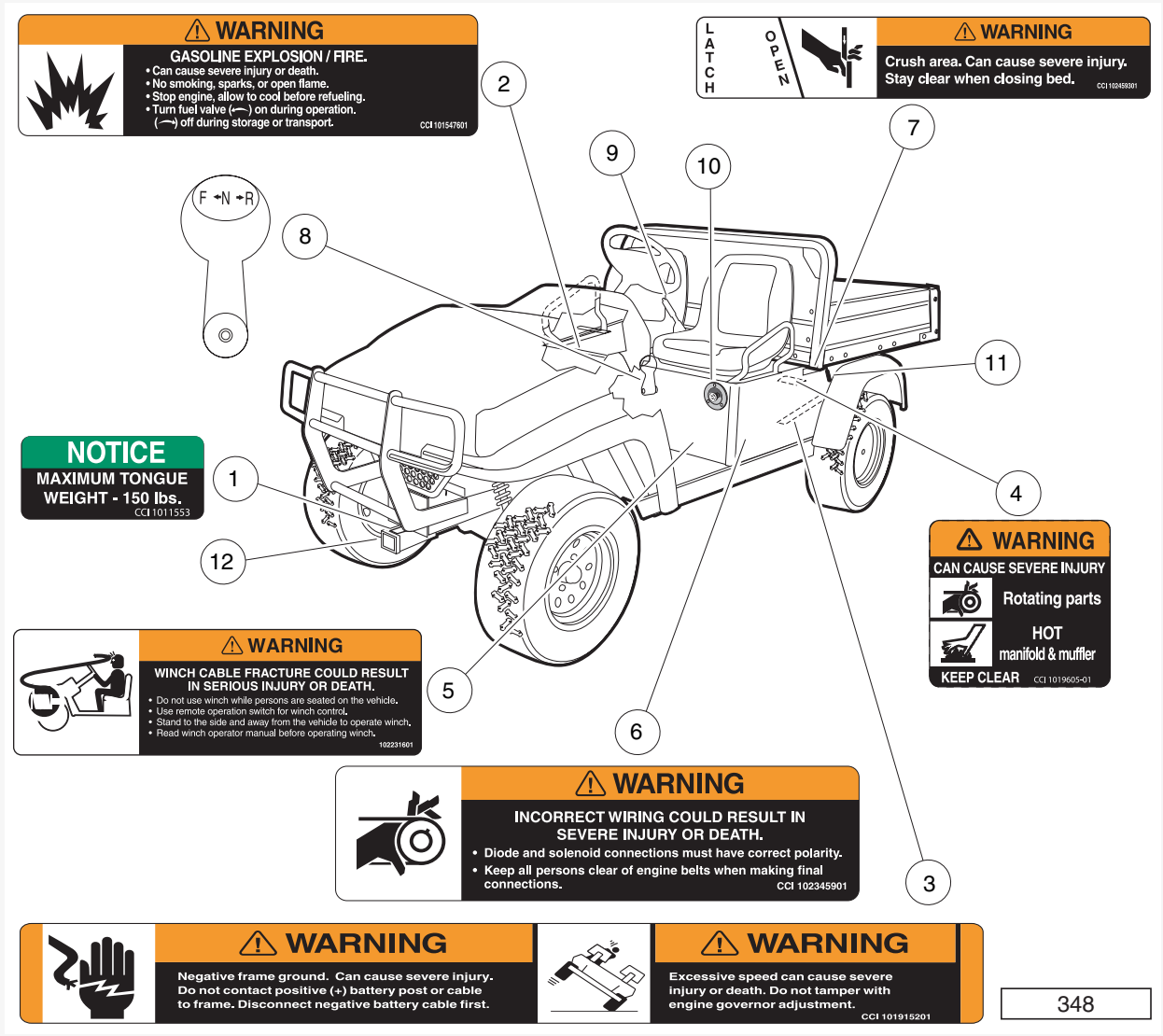

1	1011553	Decal, Trailer Hitch Tongue Weight Notice (on trailer/ receiver hitch)	11		Bed Latch
2	101547601	Decal, Gasoline Fuel Warning (at fuel fill or on frame, near fuel tank)	12		Receiver Hitch
3	101915201	Decal, Frame Ground/Governor Warning (on vehicle frame near battery)	13		
4	101960501	Decal, Rotating Parts/Hot Manifold Warning (on engine, starter/generator, and transaxle)	14		
5	102231601	Decal, Winch Safety Warning (on vehicle body, below seat)	15		
6	102345901	Decal, Diode Safety Warning (on vehicle frame, near diode)	16		
7	102459301	Decal, Bed Latch Warning (on vehicle body, below bed latch)	17		
8		Forward/Reverse Control	18		
9		Park Brake	19		
10		Choke	20		

PRACTICE SAFETY

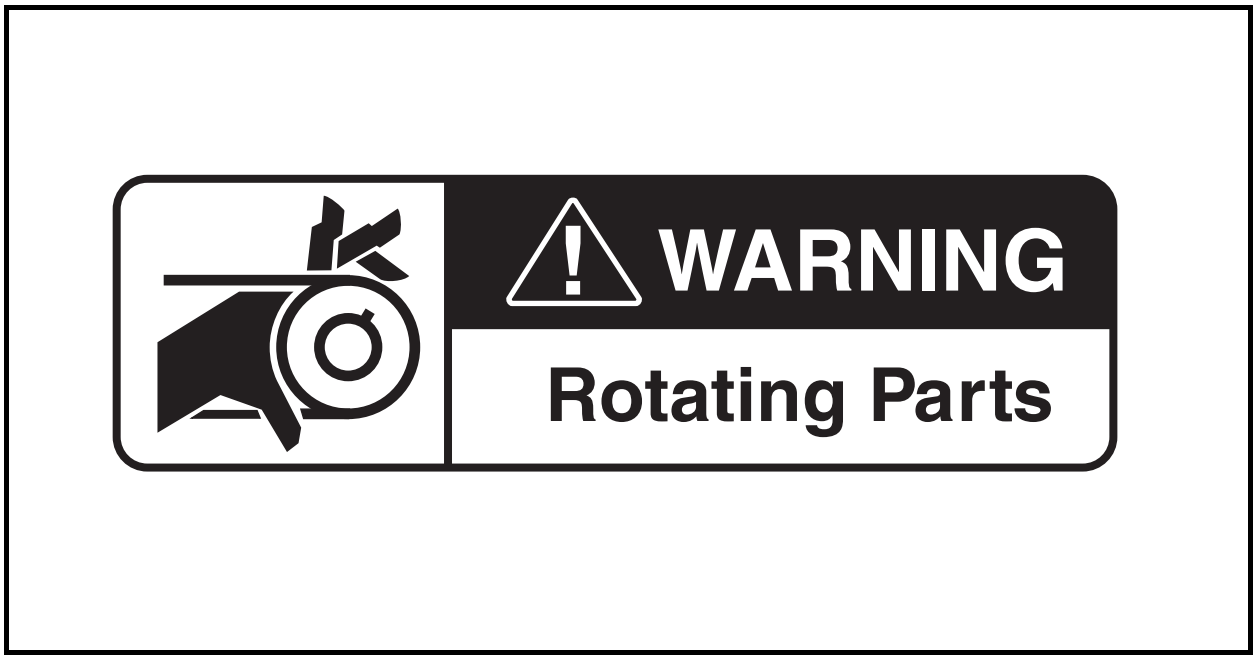

Figure 1 Practice Safety

Safety signs like you see above may at first seem shocking, but their impact is mild compared with the reality of severe personal injury.

Your safety and satisfaction are of the utmost importance to us. That is why before operating the vehicle, we urge you to review the information in this manual. Understand and become familiar with the DANGER, WARNING, and CAUTION statements and procedures it contains, along with the safety decals that are affixed to your vehicle.

Take time to understand the language of safety. It is a language that can save your life.

PROPOSITION 65 – STATE OF CALIFORNIA

⚠ WARNING

- **This product contains or emits chemicals or substances that have been determined by the state of California to cause cancer and birth defects or other reproductive harm.**

SAFETY DETAILS

⚠ WARNING

- **This manual should be read completely before attempting to drive or service the vehicle. Failure to follow the instructions in this manual could result in property damage, severe personal injury, or death.**

It is important to note that some vital statements throughout this manual and on the decals affixed to the vehicle are preceded by the words DANGER, WARNING, or CAUTION. For your protection, we recommend that you take special notice of these safety precautions. Safety precautions are essential and must be followed.

If any of the operation or safety decals on the vehicle become damaged, have been removed, or cannot be easily read, they should be replaced immediately to avoid possible property damage, personal injury, or death. Contact your dealer.

⚠ DANGER

- **A DANGER indicates an immediate hazard that will result in severe personal injury or death.**

⚠ WARNING

- **A WARNING indicates an immediate hazard that could result in severe personal injury or death.**

⚠ CAUTION

- **A CAUTION with the safety alert symbol indicates a hazard or unsafe practice that could result in minor personal injury.**

CAUTION

- **A CAUTION without the safety alert symbol indicates a potentially hazardous situation that could result in property damage.**

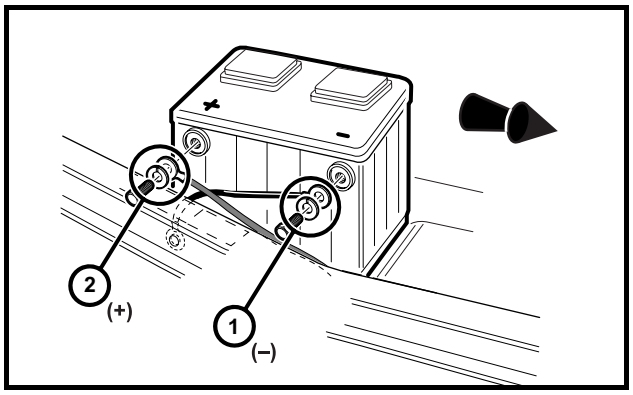

Figure 1 Battery Cable Removal

(Viewed from passenger side of vehicle)
1. Remove negative battery cable.
2. Remove positive battery cable.
Connect battery cables in reverse order.

GENERAL WARNINGS

The following safety statements listed must be heeded whenever the vehicle is being operated, repaired, or serviced. **See Safety Decal and Feature Identification on page 4.** Other specific safety statements appear throughout this manual and on the vehicle.

⚠ DANGER

- **Battery – Explosive gases! Do not smoke. Keep sparks and flames away from the vehicle and service area. Ventilate when charging or operating vehicle in an enclosed area. Wear a full face shield and rubber gloves when working on or near batteries.**
- **Gasoline – Flammable! Explosive! Do not smoke. Keep sparks and flames away from the vehicle and service area. Service only in a well-ventilated area.**
- **Do not operate engine in an enclosed area without proper ventilation. The engine produces carbon monoxide, which is an odorless, deadly poison.**
- **The vehicle will not provide protection from lightning, flying objects, or other storm-related hazards. If caught in a storm while driving a Bobcat vehicle, exit the vehicle and seek shelter in accordance with applicable safety guidelines for your location.**

⚠ WARNING

- **Follow the procedures exactly as stated in this manual, and heed all DANGER, WARNING, and CAUTION statements in this manual as well as those on the vehicle.**
- **Do not leave children unattended on vehicle.**
- **Prior to leaving the vehicle unattended or servicing the vehicle, set the park brake, place the Forward/Reverse handle in the NEUTRAL position, turn the key switch to the OFF position, and remove the key. Chock the wheels when servicing the vehicle.**
- **Improper use of the vehicle or failure to properly maintain it could result in decreased vehicle performance, severe personal injury, or death.**
- **Any modification or change to the vehicle that affects the stability or handling of the vehicle, or increases maximum vehicle speed beyond factory specifications, could result in severe personal injury or death.**
- **Check the vehicle for proper location of all vehicle safety and operation decals and make sure they are in place and are easy to read.**
- **For vehicles with cargo beds, remove all cargo before raising the bed or servicing the vehicle. If the vehicle is equipped with a prop rod, ensure that it is securely engaged while bed is raised. Do not close bed until all persons are clear of cargo bed area. Keep hands clear of all crush areas. Do not drop cargo bed; lower gently and keep entire body clear. Failure to heed this warning could result in severe personal injury or death.**
- **Only trained technicians should service or repair the vehicle. Anyone doing even simple repairs or service should have knowledge and experience in electrical and mechanical repair. The appropriate instructions must be used when performing maintenance, service, or accessory installation.**
- **To avoid unintentionally starting the vehicle:**
  - **Disconnect battery cables, negative (–) cable first (Figure 1).**
  - **Disconnect the spark plug wire from the spark plug.**

WARNING CONTINUED ON NEXT PAGE...

⚠ WARNING

- **Frame ground – Do not allow tools or other metal objects to contact frame when disconnecting battery cables or other electrical wiring. Do not allow a positive wire to touch the vehicle frame, engine, or any other metal component.**
- **Wear safety glasses or approved eye protection when servicing the vehicle. Wear a full face shield and rubber gloves when working on or near batteries.**
- **Do not wear loose clothing or jewelry such as rings, watches, chains, etc., when servicing the vehicle.**
- **Use insulated tools when working near batteries or electrical connections. Use extreme caution to avoid shorting of components or wiring.**

GENERAL INFORMATION

This manual includes information on the Bobcat 2100 vehicle. All operating procedures, maintenance, and regular servicing are identical in all vehicles unless otherwise noted.

MODEL IDENTIFICATION

The serial number of your Bobcat vehicle is printed on a bar code decal mounted on the frame behind and to the left of the brake pedal (Example: 52271101) **(Figure 2)**. **See following NOTE.**

NOTE: *Have the vehicle serial number available when ordering parts or making inquiries.*

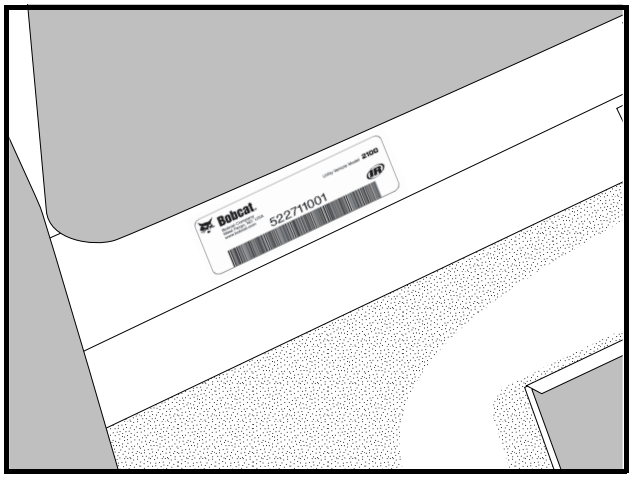

Figure 2 Serial Number

CONTROLS AND INDICATORS

See General Warnings on page 9.

⚠ WARNING

- **Before allowing anyone to drive the vehicle, make sure the driver is familiar with all controls and operating procedures.**
- **Do not tamper with the governor. Doing so will void the warranty, as well as damage the engine and other components, and could result in property damage, personal injury, or death due to unsafe speeds.**
- **Do not shift the Forward/Reverse handle while the vehicle is in motion.**
- **Engine must be at idle before shifting the Forward/Reverse handle. Failure to do so may result in injury to inattentive passengers and (or) damage to the vehicle.**
- **To avoid injury to an inattentive passenger or damage to the vehicle, always bring the vehicle to a full stop before shifting the Forward/Reverse handle.**
- **To avoid unintentionally starting or rolling the vehicle, set the park brake, place the Forward/Reverse handle in the NEUTRAL position, turn the key switch to the OFF position, and remove the key when leaving the vehicle.**
- **With the differential lock engaged, vehicle turning functions are greatly reduced. To prevent loss of vehicle control when differential lock is engaged, do not operate vehicle at speeds greater than half throttle and use caution when attempting to turn the vehicle.**

KEY SWITCH

The key switch is mounted on the instrument panel to the right of the steering column **(Figure 3)**. It has three positions: OFF, ON, and START. To start the vehicle, place the Forward/Reverse handle in the NEUTRAL position and turn the key past the ON position to the START position and hold until the engine is running smoothly. Release the key and it will return to the ON position and the engine should idle.The engine will continue to idle until the key is turned to the OFF position. **See following WARNING, CAUTION and NOTE.**

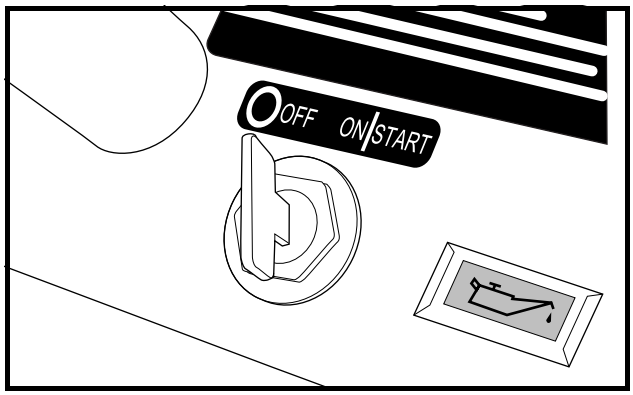

Figure 3 Key Switch

⚠ WARNING

- **Moving parts! Keep clear of the engine compartment while the engine is running.**

CAUTION

- **Do not “rev” the engine for long periods of time while the Forward/Reverse handle is in the NEUTRAL position. Failure to heed this caution could result in damage to the unitized transaxle.**
- **Do not shift the Forward/Reverse handle while the accelerator pedal is pressed. Shift the handle only when the vehicle is at a complete stop. Failure to heed this caution could result in damage to the unitized transaxle.**

NOTE: *The key can be removed only when the key switch is in the OFF position.*

FORWARD/REVERSE CONTROL

The Forward/Reverse handle is located on the seat support panel **(Figure 4)**. The handle has three distinct positions: **F** (FORWARD), **N** (NEUTRAL), and **R** (REVERSE). Rotate the handle towards the driver (FORWARD) to operate the vehicle in the forward direction, or towards the passenger (REVERSE) to operate the vehicle in reverse. The engine can be started only when the handle is in the straight up position (NEUTRAL). The engine must be at idle before shifting the Forward/Reverse handle. **See previous WARNING and CAUTION.**

Bobcat vehicles operate at a reduced speed in reverse. The reverse buzzer will sound as a warning when the Forward/Reverse handle is in the REVERSE position.

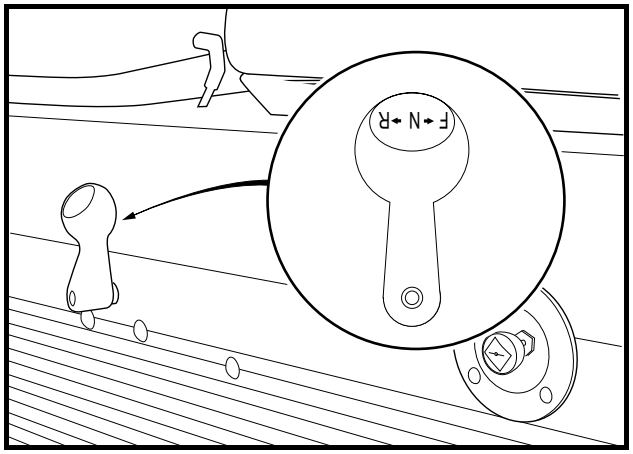

Figure 4 Forward/Reverse Handle

ACCELERATOR PEDAL

The accelerator pedal is the pedal on the right, with the word GO molded into it **(Figure 5)**.

With the engine running and the Forward/Reverse handle in the FORWARD or REVERSE position, vehicle speed will increase as the accelerator pedal is pressed. When the accelerator pedal is released, it will return to the original position and the engine will idle. **See WARNING and CAUTION on page 11.**

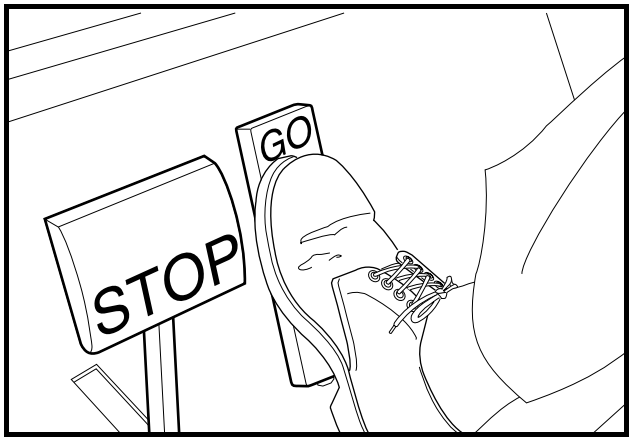

Figure 5 Accelerator and Brake Pedals

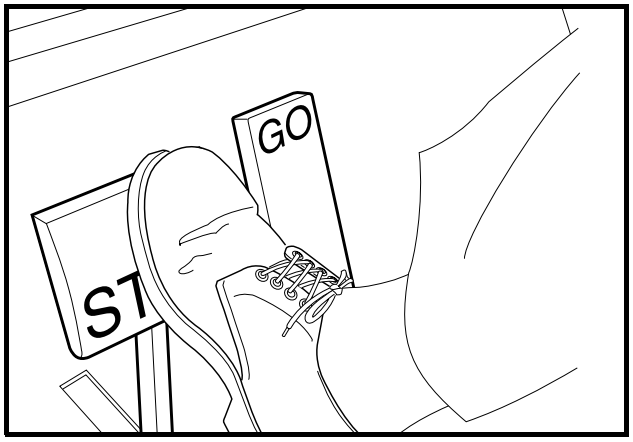

Figure 6 Brake Pedal

BRAKE PEDAL

The brake pedal is the large pedal on the left with the word STOP molded into it **(Figure 5)**. To slow or stop the vehicle, press the brake pedal **(Figure 6).**

PARK BRAKE

The park brake handle is located between the driver and passenger seats. To engage the park brake, first apply pressure to the brake pedal, then pull up on the park brake handle until handle latches into place. To disengage, pull up on the handle and press the button on the end of the handle. Push handle down. **See following WARNING.**

⚠ WARNING

- **The park brake has multiple locking positions and should be firmly locked to prevent vehicle from rolling.**

CHOKE

The choke is located on the seat support panel below and to the left of the driver's left knee. If the vehicle is hard to start in cool or cold temperatures, activate choke: Pull the choke handle out to activate. Release the handle when the engine begins to run smoothly **(Figure 7)**.

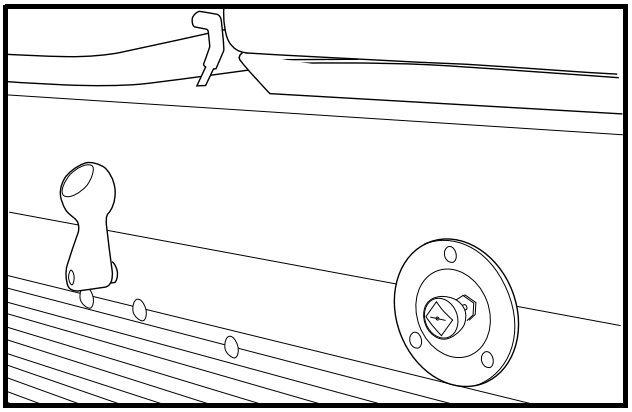

Figure 7 Choke

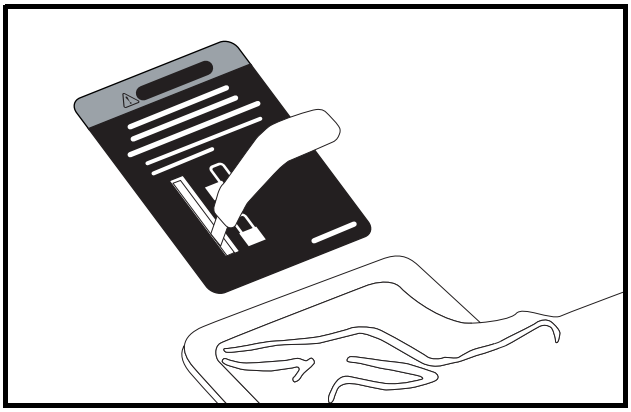

Figure 8 Differential Lock

DIFFERENTIAL LOCK

⚠ WARNING

- **With the differential lock engaged, vehicle turning functions are greatly reduced. To prevent loss of vehicle control when differential lock is engaged, do not operate vehicle at speeds greater than half throttle and use caution when attempting to turn the vehicle.**
- **Disengage differential lock on paved surfaces.**

The differential lock is used to provide better traction at the rear wheels when necessary. Engaging the differential lock will transfer power to both rear wheels simultaneously **(Figure 8)**.

1. To engage the differential lock, slow the vehicle to no more than half throttle and pull differential lock handle toward the back of the vehicle. The differential lock will engage when power to both rear wheels is required.
2. To disengage the differential lock, come to a complete stop, then push lever toward front of vehicle.

LOW OIL WARNING LIGHT

The vehicle is equipped with a low oil warning light, located on the instrument panel just to the right of the steering column and key switch **(Figure 9)**. If the warning light comes on, oil should be checked and added to the engine as necessary before continuing to use the vehicle. The vehicle should never be driven when the low oil warning light remains on. If the warning light goes on and off, the vehicle may be driven, but oil should be added at the first opportunity. If the oil level is correct and the warning light stays on, have a trained technician check the vehicle. **See following CAUTION.**

CAUTION

- **Failure to add oil immediately when the low oil warning light stays on may result in permanent engine damage.**

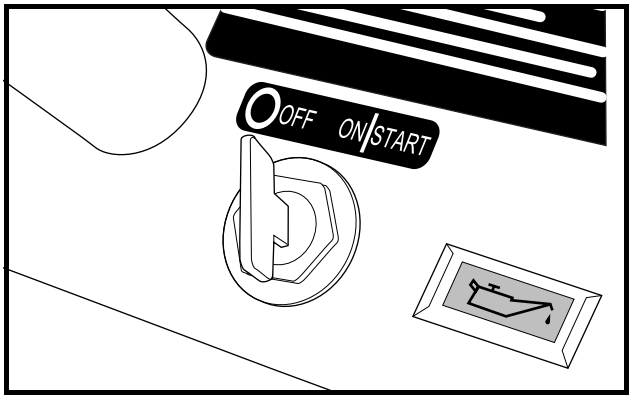

Figure 9 Low Oil Warning Light

FUEL GAUGE/HOUR METER

A fuel gauge and hour meter are housed together at the lower left corner of the instrument panel. The fuel gauge operates when the key switch is in the ON position, and allows the operator to monitor the fuel level in the vehicle. The hour meter operates only when the engine is running, and should be used only by trained technicians to track vehicle usage and determine when periodic service procedures are required. **See Periodic Service Schedule on page 27.**

HEADLIGHT CONTROL

The headlight control is located on the front instrument panel between the fuel gauge/hour meter and steering column. Pull the headlight control knob out to turn the headlights on and push the knob in to turn the headlights off.

NOTE: *Using the headlights for extended periods of time without the engine running, or with the engine idling, will discharge the battery.*

SEAT LATCH AND ADJUSTMENT

The seats are hinged to allow easy access to the engine compartment. A latch at the rear of each seat bottom keeps the seat from moving on its hinges while the vehicle is in operation. To disengage the latch, grasp the seat back and pull firmly in a forward/upward direction until the latch releases. To engage the seat latch, push down firmly on the seat back until the seat locks into place. **See following WARNING.**

The bucket seats on all vehicles are adjustable and can be moved forward or backward to accommodate the driver or passenger. To adjust a seat:

1. Remove the seat from the vehicle.
2. Remove the four bolts and washers from the bottom of the seat mounting plate.
3. Align the mounting plate holes with holes in the seat to achieve the desired seat position.
4. Install washers and bolts and tighten to 96 in-lb (10.8 N·m).
5. Reinstall seat in vehicle.

⚠ WARNING

- **Make sure seat hinges and latch are securely engaged before operating vehicle.**

PRE-OPERATION AND DAILY SAFETY CHECKLIST

Each Bobcat vehicle has been thoroughly inspected and adjusted at the factory; however, upon receiving your new vehicle(s), you should become familiar with its controls, indicators, and operation. Carefully inspect each vehicle to ensure that it is in proper working condition before accepting delivery.

Use the following checklist as a guide to inspect the vehicle. This checklist should be used daily to ensure that the vehicle is in proper working condition and in conjunction with the Performance Inspection on page 16 and Periodic Service Schedule on page 28. Any problems should be corrected by a Bobcat distributor/dealer or a trained technician.

- **General:** All the parts should be in place and properly installed. Be sure that all nuts, bolts, and screws are tight. Check hose clamps for tight fit and the starter belt for tightness.
- **Safety and information decals:** Check to ensure that all safety and information decals are in place. **See Safety Decal and Feature Identification on page 4.**
- **Tires:** Check for proper tire pressure. Visually inspect tires for wear, damage, and proper inflation on a daily basis. **See Vehicle Specifications on page 40.**
- **Battery:** Before using vehicle for the first time, check electrolyte to ensure it is at the proper level **(Figure 26, Page 38)**. Check battery posts. Wires should be tight and free of corrosion and battery should be fully charged.

- **Engine:** Check for proper engine oil level. **See Engine Oil on page 31.**
- **Fuel:** Check fuel level. **See Fueling Instructions on page 35.** Check fuel tank, lines, fuel cap, pump, fuel filters, and carburetor for fuel leakage on a daily basis.
- **Exhaust system:** Check for leaks.
- **Hydraulic brakes:** Check fluid level. Fill with DOT 5 brake fluid only. **See Master Cylinder on page 30.**
- **Performance Inspection:** Inspect as instructed. **See Performance Inspection on page 16.**

PERFORMANCE INSPECTION

After you have familiarized yourself with the vehicle controls and have read and understood the driving instructions, take the vehicle for a test drive.

Use the following checklist as a guide to inspect the vehicle and check daily for proper operation. Any problems should be corrected by a Bobcat distributor/dealer or a trained technician.

- **Forward/Reverse shifter:** Check for proper operation. **See Controls and Indicators on page 11.**
- **Brakes:** Be sure the brakes function properly. When brake pedal is fully pressed under moderate pressure, it should not go more than halfway to the floorboard, and vehicle should come to a smooth, straight stop. If the brake pedal goes more than halfway to the floorboard, or if the vehicle swerves or fails to stop, have the brake system checked and adjusted as required. When brake pedal is fully pressed under heavy pressure, pedal should feel firm and foot pad should be a minimum of 2 inches (5.1 cm) from floorboard. Brake adjustment must be maintained so the brake pedal cannot be pressed to the floorboard under any circumstance.
- **Park brake:** Apply moderate pressure to park brake handle. Tension should increase as the handle is pulled. When latched, the park brake should lock the wheels and hold the vehicle stationary (on an incline of 20% or less).
- **Reverse buzzer:** The reverse buzzer should sound as a warning when the Forward/Reverse handle is in the REVERSE position.
- **Steering:** The vehicle should be easy to steer and should not have any play in the steering wheel.
- **Accelerator:** After starting the engine with the key switch and placing the Forward/Reverse handle in the FORWARD position, the vehicle should accelerate smoothly to full speed as the accelerator pedal is pressed. When the pedal is released it should return to the original position and the engine should idle. Bobcat vehicles operate at reduced speed in reverse.
- **Governor:** Check maximum vehicle speed. It should operate in forward at 17-19 mph (27-31 km/h) on a level surface.
- **Differential lock cable:** With the wheels at rest, pull the differential lock handle toward the rear of the vehicle (locked position). The differential lock arm at the other end of the cable should move approximately one-half inch (12.7 mm) downward. When the differential lock handle is placed back into the unlocked position, the differential lock arm should move approximately one-half inch (12.7 mm) upward.
- **General:** Listen for any unusual noises such as squeaks or rattles. Check the vehicle's ride and performance. Have a Bobcat dealer or a trained technician investigate anything unusual.

DRIVING INSTRUCTIONS

⚠ WARNING

- **Only licensed drivers should be allowed to drive the vehicle.**
- **Before allowing anyone to drive the vehicle, make sure the driver is familiar with all controls and operating procedures.**
- **No one under the age of 16 years should be allowed to drive the vehicle.**
- **No more than one person per bucket seat at one time, or two persons per bench seat.**
- **Do not allow riders in the cargo bed.**
- **For night use, the vehicle must be equipped with headlights, taillights, and reflectors.**
- **The vehicle is not specially equipped for handicapped persons:**
  - **Be sure all persons can properly operate the vehicle prior to allowing them to drive the vehicle.**
  - **Be sure all passengers are capable of securing themselves in a vehicle before allowing them to ride in one.**
- **Do not shift the Forward/Reverse handle while the vehicle is in motion.**
- **Stop the vehicle before shifting the Forward/Reverse handle. Engine must be at idle before shifting the Forward/Reverse handle. Failure to do so may result in injury to inattentive passengers and (or) damage to the vehicle.**
- **To help avoid being struck, do not stand in front of or behind the vehicle.**
- **Do not leave children unattended on vehicle.**
- **Operate the vehicle from the driver seat only.**
- **To help prevent falls from the vehicle, remain seated and hold onto seat handles at all times. Driver should keep both hands on the steering wheel when the vehicle is in motion.**
- **To help prevent the possibility of serious injury, keep entire body inside vehicle.**
- **To help prevent vehicle from overturning, drive slowly in turns.**
- **To help prevent vehicle from overturning, drive slowly straight up and down slopes. Avoid driving the vehicle on slopes exceeding 20% incline.**
- **Avoid stopping a loaded vehicle on a hill. If a loaded vehicle must be stopped on a hill, avoid sudden starts or rolling backwards and stopping suddenly. Failure to heed this warning could result in the vehicle overturning.**
- **To help avoid possible injury to inattentive passengers and (or) damage to the vehicle, avoid sudden starts, sudden stops and abrupt turns.**
- **To help avoid the possibility of losing control of or overturning the vehicle, reduce speed for adverse driving conditions such as wet grass or rough terrain.**
- **Do not use the vehicle on public roads. It is neither designed nor intended for street use and should not be licensed for use on public roads.**
- **The vehicle should be driven in only specified areas by trained operators.**
- **Never attempt jumps.**
- **Do not drive while under the influence of alcohol, drugs, or medications.**
- **Use brakes to reduce speed when coasting downhill.**

No one should drive the vehicle without first being instructed in the proper operation and use of vehicle controls. An experienced operator should accompany each first-time driver on a test drive before allowing the driver to operate the vehicle alone.

To ensure safe operation of the vehicle, follow exactly and in order, all of the following procedures. Read and understand all instructions prior to driving the vehicle.

STARTING THE VEHICLE

1. Read safety warnings on the instrument panel and vehicle loading information located above pedals.
2. Be sure load, if any, is secure.
3. Study and understand controls.
4. Be sure all passengers are seated and holding onto hand holds. Driver should have both hands on the steering wheel.
5. Make sure wheels are turned in desired direction and nothing is in your path.
6. Make sure the Forward/Reverse handle is in the NEUTRAL position.
7. Press and hold the brake pedal.
8. Turn the key all the way to the START position and hold, activating the choke as necessary, until the engine is running smoothly. The engine will idle in neutral.
9. Release hand brake.
10. While keeping the brake pedal engaged, select direction of travel by placing shift handle in desired position (F = forward or R = reverse). Engine must be at idle before moving shift handle. A buzzer will sound as a warning when the Forward/Reverse handle is in the REVERSE position.
11. Release the brake pedal completely, and then slowly press the accelerator pedal. As the accelerator pedal is pressed, the vehicle will begin to move, and speed will increase until full speed is reached. **See following WARNING.**

⚠ WARNING

- **Operator must control vehicle speed when going downhill.**
- **Never shift vehicle out of the FORWARD position while going downhill. If you do, you will not be able to shift into the REVERSE position or back into the FORWARD position until stopped.**
- **Press the brake pedal as necessary and press the accelerator pedal partially when descending a hill. With the accelerator pedal partially pressed, the governor will cause the engine to assist the brakes in controlling downhill speed.**

STOPPING THE VEHICLE

To stop the vehicle, release the accelerator pedal and press the brake pedal until the vehicle comes to a complete stop. **See following WARNING and CAUTION**.

⚠ WARNING

- **Driving through water may affect the brakes. After driving through water, check effectiveness of the brakes by gently pressing the brake pedal. If the vehicle does not slow down at the normal rate, continue to press the brake pedal until the brakes dry out and normal performance returns.**

⚠ CAUTION

- **When stopped on a hill, use the brake pedal to hold your position. Do not use the accelerator pedal to hold position.**

PARKING AND LEAVING THE VEHICLE

1. After stopping vehicle, set hand brake until it locks. Make sure it is fully engaged. This will prevent the vehicle from rolling.
2. Turn the key switch to the OFF position and place the Forward/Reverse handle in the NEUTRAL position. Remove the key and turn the fuel shut-off valve to the closed (OFF) position when the vehicle is not in use **(Figure 12, Page 24)**. **See also Figure 24 on page 36.**

BED LATCH AND PROP ROD

See General Warnings on page 9.

⚠ DANGER

- **Use caution when working under bed. Be sure prop rod is secure. Otherwise the bed will fall, resulting in severe personal injury or death.**

⚠ WARNING

- **For vehicles with cargo beds, remove all cargo before raising the bed or servicing the vehicle. If the vehicle is equipped with a prop rod, ensure that it is securely engaged. Do not close bed until all persons are clear of cargo bed area. Keep hands clear of all crush areas. Do not drop cargo bed; lower gently and keep entire body clear. Failure to heed this warning could result in severe personal injury or death.**

NOTE: *The vehicle is equipped with an automatically engaging prop rod **(Figure 11)**, unless equipped with the electric bed lift accessory.*

The bed latch **(Figure 10)** has an automatically engaging prop rod and prop rod track **(Figure 11)** as standard features. To lift the bed, pull the bed latch handle toward the rear of the vehicle and lift the bed. The prop rod will come to rest in one of the notches in the prop rod track. To close the bed, lift the bed so that the prop rod is no longer supported in one of the track notches. Push the prop rod toward the front of the vehicle to free it from the track notch and gently lower the bed. DO NOT drop the bed. **See preceding DANGER, WARNING, and NOTE.**

- **WARNING.**

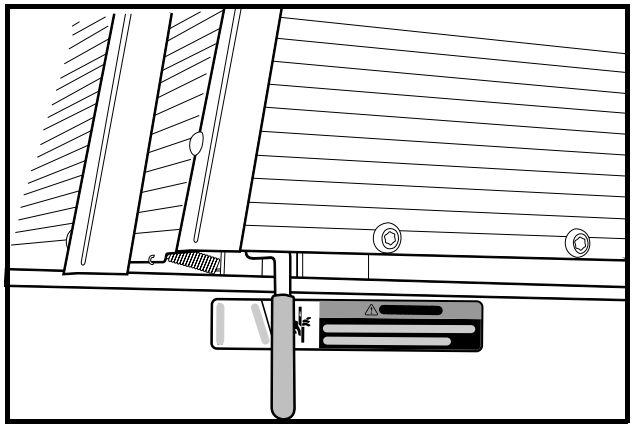

Figure 10 Bed Latch – Bobcat 2100

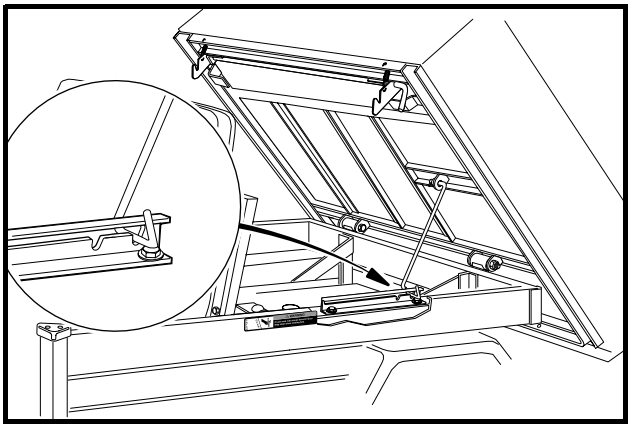

Figure 11 Prop Rod – Bobcat 2100

FRONT SHOCK ABSORBERS

The vehicle arrives from the factory with the front coil-over shocks pre-adjusted for optimum vehicle performance. We do not recommend adjusting the shock absorbers unless the vehicle will be equipped with a cab enclosure. In that event, please refer to the cab or driving range installation instructions for the shock absorber adjustment procedure.

LOADING AND UNLOADING

⚠ WARNING

- **Firmly engage park brake before loading vehicle.**
- **Do not allow riders in the cargo bed.**
- **Reduce vehicle load and speed when driving up or down slopes or on uneven terrain.**
- **Do not exceed rated vehicle capacity. Rated capacity is for level surfaces only.**
- **Overloading can affect vehicle handling or cause component failure, resulting in loss of control of vehicle and possible severe personal injury or death.**
- **Do not load tailgate. The tailgate should be in the upright position and latched securely while the vehicle is in motion.**
- **To help avoid shifting vehicle load and possibly overturning the vehicle, avoid sudden starts, sudden stops and abrupt turns. Make sure cargo is well secured.**
- **Avoid top-heavy loads. The center of gravity of load should never exceed 15 inches (38 cm) above the bottom of the cargo bed.**
- **The cargo's center of gravity may affect handling, steering, and braking of the vehicle.**
- **Unload cargo bed before raising vehicle with a lift, hoist, or jack.**
- **Avoid stopping on a hill when loaded. If you must stop on a hill, avoid sudden starts, or rolling**

backwards and stopping suddenly. Failure to heed this warning may cause vehicle to overturn, possibly resulting in severe personal injury.

- **Reduce speed and avoid sudden stops when backing up. Failure to do so may cause the vehicle to overturn or flip over backwards.**

Center and secure cargo as far forward as possible in the cargo bed. Do not overload the vehicle. **See the following chart for vehicle capacities.**

	BOBCAT 2100
Maximum payload capacity (Cargo bed load plus gross trailer weight)	800 lb. (363 kg)
Maximum vehicle capacity (Cargo load, passengers, plus gross trailer weight)	1200 lb. (545 kg)
Maximum gross vehicle weight (Fully loaded vehicle, including accessories)	2350 lb. (1080 kg)
Maximum passenger capacity (Operator and passenger)	400 lb. (181 kg)
Trailer tongue weight	150 lb. force (667 N)

Maximum payload capacity must be reduced accordingly when any option or accessory is installed on the vehicle. **See following NOTE.**

NOTE: *A standard Bobcat 2100 vehicle with a cab accessory weighing 235 lb. (107 kg) must reduce its maximum payload capacity by 235 lb. (107 kg).*

TOWING WITH THE VEHICLE

⚠ WARNING

- **Do not tow a vehicle or trailer on public streets or highways.**
- **Normal vehicle operating speed should be reduced when towing.**
- **Extreme caution should be used when towing.**
- **Do not allow riders in the vehicle or trailer being towed.**
- **Avoid sudden starts, sudden stops, and tight turns when towing.**
- **Avoid stopping on a hill when towing. If you must stop on a hill, avoid sudden starts, or rolling backwards and stopping suddenly. Failure to heed this warning may cause vehicle to overturn, possibly resulting in severe personal injury.**

Towing a trailer or Bobcat vehicle with another Bobcat vehicle can have adverse effects on vehicle handling. Be especially cautious when towing other equipment. **See the preceding chart for vehicle capacities.**

Parking the vehicle with a trailer on a hill should be avoided. If you must park on a hill, apply brakes and have someone chock tires of trailer. Brakes should be released to allow chocks to absorb load of trailer. After tires have been chocked, engage park brake.

TRANSPORTING ON A TRAILER

⚠ WARNING

- **Turn the fuel shut-off valve to the closed (OFF) position.**
- **Do not allow riders in the trailer being towed.**
- **Avoid sudden starts, sudden stops, and tight turns when towing.**
- **Avoid stopping on a hill when towing. If you must stop on a hill, avoid sudden starts, or rolling backwards and stopping suddenly. Failure to heed this warning could cause the vehicle to overturn, possibly resulting in severe personal injury.**
- **Reduce normal driving speed when transporting a Bobcat vehicle on a trailer.**
- **For use on public roads, the trailer must meet all federal, state, and local requirements such as taillights, brake lights, etc.**
- **Never tow a Bobcat vehicle behind a passenger vehicle or truck on a public road unless it is on an approved trailer.**
- **The vehicle to be transported should be tied securely to the trailer, with the Forward/Reverse handle in the NEUTRAL position, the key switch in the OFF position, and the park brake firmly engaged.**
- **Because of the added length of the trailer, use caution when making turns.**
- **Do not transport the vehicle on a trailer with a load in the vehicle cargo bed.**
- **Remove the vehicle windshield and secure the seats before transporting on a trailer.**

If the vehicle must be transported over long distances or on public highways, it should be transported on an approved trailer that has an approved load rating of 2000 lb. (908 kg) per vehicle being transported.

NOTE: *A two-car trailer should be rated at 2 x 2000 lb. = 4000 lb. (2 x 908 kg = 1816 kg).*

STORAGE

See General Warnings on page 9.

⚠ DANGER

- **Do not attempt to drain fuel when the engine is hot or while it is running.**
- **Be sure to clean up any spilled gasoline before operating the vehicle.**
- **Store fuel in an approved fuel container only. Store in a well-ventilated area away from sparks, open flames, heaters, or heat sources.**
- **Keep fuel out of the reach of children.**
- **Do not siphon fuel from the vehicle.**

⚠ WARNING

- **Turn the key switch to the OFF position, remove the key, and leave the Forward/Reverse handle in the NEUTRAL position during storage. This is to prevent unintentionally starting the vehicle or a fire hazard.**
- **Turn the fuel shut-off valve to the closed (OFF) position (Figure 12).**
- **Do not attempt to charge frozen batteries or batteries with bulged cases. Discard the battery.**

Frozen batteries can explode.

⚠ CAUTION

- **Batteries in a low state of charge will freeze at low temperatures.**

PREPARING THE VEHICLE FOR EXTENDED STORAGE

1. Unload the vehicle so that tires are supporting only the weight of the vehicle.
2. Store vehicle in a cool, dry place. This will minimize battery self-discharge. If the battery appears to be weak, have it charged by a trained technician. Use an automotive-type 12-volt battery charger rated at 10 amps or less. Check electrolyte level after charging and add distilled water if necessary.
3. Make sure the key switch is in the OFF position and the Forward/Reverse handle is in the NEUTRAL position. Chock the wheels.
4. Access the engine compartment. **See WARNING "For vehicles with cargo beds..." on page 9.**

- **Bobcat 2100:**

  4.1. Tilt the cargo bed and ensure that the prop rod is properly engaged.

- **Bobcat 2100S:**

  4.2. Remove the rear bench seat.

5. Lift the front passenger side seat.
6. Drain carburetor and seal the fuel tank.
   6.1. Turn the fuel shut-off valve to the closed (OFF) position **(Figure 12)** and run the engine until fuel remaining in the carburetor and fuel line is depleted and the engine stalls.
   6.2. Loosen, but do not remove, the carburetor drain screw and drain fuel remaining in bowl into a small, clean container, then pour the fuel from the container into vehicle fuel tank. Tighten the carburetor drain screw.
   6.3. Fill fuel tank to about 1 inch (2.5 cm) from top of fuel tank and, following manufacturer's directions, add a commercially available fuel stabilizer (such as Sta-Bil®).
   6.4. Disconnect fuel vent line from fuel tank vent nipple.

6.5. Plug the fuel tank vent nipple so that it is air tight. We recommend using a slip-on vinyl cap.

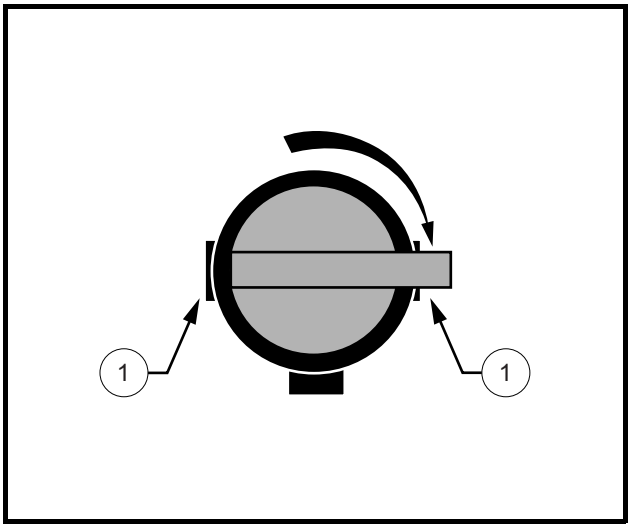

Figure 12 Fuel Shut-off Valve – Closed Position

Viewed From Selector Side of Valve
1. Closed (OFF) Position
Selector Is Aligned with OFF Markings On the Sides of Valve

7. Disconnect the battery cables, negative (–) cable first. **See WARNING "To avoid unintentionally starting..." on page 9.**
8. Batteries should be clean and free of corrosion. Wash tops and terminals of batteries with a solution of baking soda and water (1 cup (237 mL) baking soda per 1 gallon (3.8 L) of water). Rinse solution off batteries. Do not allow this solution to enter the batteries. Be sure terminals are tight. Let the terminals dry and then coat them with Battery Terminal Protector Spray (CCI P/N 1014305).
9. To protect the engine, remove spark plug and pour 1/2 ounce (14.2 mL) of SAE 10 weight oil into the engine through the spark plug hole. Rotate engine crankshaft by hand several times and then install the spark plug and tighten to 20 ft-lb (27 N·m).
10. Lower the passenger side seat.
11. Lower the cargo bed. **See WARNING "For vehicles with cargo beds..." on page 9.**
12. Adjust tires to recommended tire pressure. **See Vehicle Specifications on page 40.**
13. Perform semiannual periodic lubrication. **See Periodic Lubrication Schedule on page 29.**
14. Thoroughly clean front body, rear body, seats, cargo bed, engine compartment, and underside of vehicle.
15. Do not engage the park brake. Chock the wheels to prevent the vehicle from rolling.

RETURNING THE STORED VEHICLE TO SERVICE

1. Make sure the key switch is in the OFF position and the Forward/Reverse handle is in the NEUTRAL position. Chock the wheels.
2. Access the battery compartment. **See WARNING "For vehicles with cargo beds..." on page 9.**
   2.1. Tilt the bed and ensure that the prop rod is properly engaged. **See WARNING "For vehicles with cargo beds..." on page 9.**
3. Lift the front passenger seat.
4. Restore fuel system to operation. **See Figure 24 on page** 36.

4.1. Remove plug from fuel tank vent.
4.2. Connect vent tube to fuel tank vent.

5. Connect battery cables, positive (+) cable first, and tighten terminals to 12 ft-lb (16 N·m). Coat terminals with Battery Terminal Protector Spray (CCI P/N 1014305).
6. Completely open the fuel shut-off valve **(Figure 13)**. Make sure the valve is fully open. A partially closed fuel shut-off valve combined with the use of the choke can result in a fouled spark plug and engine failure **(Figure 14)**.
7. Place the Forward/Reverse handle in the NEUTRAL position. Crank the engine until fuel is pumped into the carburetor and fuel lines and the engine starts. Turn the engine off. **See following NOTE.**

NOTE: *Due to the oil added to the engine in preparation for storage, engine may smoke excessively for a short time when it is run for the first time after storage.*

8. Perform the Pre-Operation and Daily Safety Checklist on page 15.
9. Lower the passenger side seat.
10. Lower the cargo bed. **See WARNING "For vehicles with cargo beds..." on page 9.**
11. Adjust tires to recommended tire pressure. **See Vehicle Specifications on page 40.**

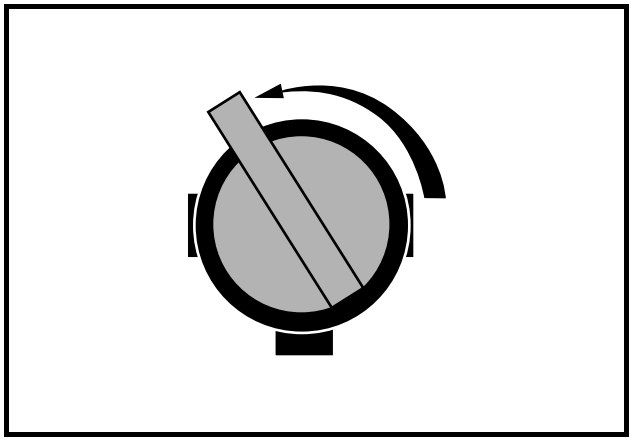

Figure 13 Fuel Shut-off Valve – Open Position

Viewed From Selector Side of Valve
Full Open (ON) Position

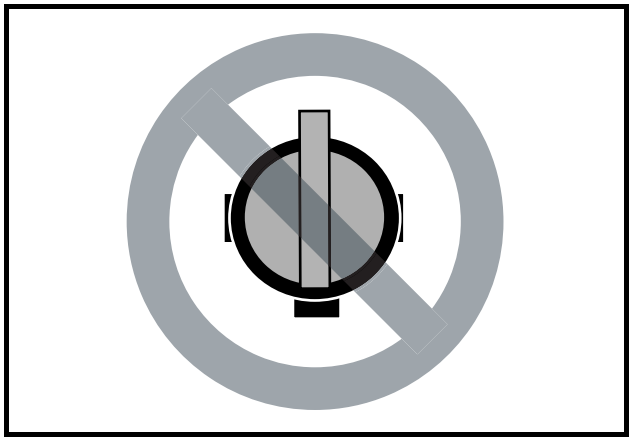

Figure 14 Fuel Valve – Partially Closed Position

Viewed From Selector Side of Valve
Partially Closed Position

MAINTENANCE

See General Warnings on page 9.

To ensure trouble-free vehicle performance, follow an established preventive maintenance program. Regular maintenance can prevent vehicle downtime and expensive repairs that result from neglect. Use the Pre-Operation and Daily Safety Checklist on page 15 and the following Periodic Service Schedule and Periodic Lubrication Schedule to keep the vehicle in proper working condition.

Any vehicle not functioning correctly should not be used until it is repaired. This will prevent further damage to the vehicle and avoid the possibility of injury due to unsafe conditions.

Contact your local Bobcat dealer for repairs, semiannual and annual periodic service.

⚠ WARNING

- **Only trained technicians should service or repair the vehicle. Anyone doing even simple repairs or service should have knowledge and experience in electrical and mechanical repair. The appropriate instructions must be used when performing maintenance, service, or accessory installation.**
- **If any problems are found during scheduled inspection or service, do not operate vehicle until repairs are made. Failure to make necessary repairs could result in fire, property damage, severe personal injury, or death.**
- **Do not wear loose clothing or jewelry, such as rings, watches, chains, etc., when servicing vehicle.**
- **Turn the key switch to the OFF position, remove the key, place the Forward/Reverse handle in the NEUTRAL position, and chock the wheels prior to servicing the vehicle.**
- **Moving parts: Do not attempt to service vehicle while engine is running.**
- **Hot! Do not attempt to service hot engine or exhaust system. Failure to heed this warning could result in severe burns.**

WARNING CONTINUED ON NEXT PAGE...

⚠ WARNING

- **For vehicles with cargo beds, remove all cargo before raising the bed or servicing the vehicle. If the vehicle is equipped with a prop rod, ensure that it is securely engaged. Do not close bed until all persons are clear of cargo bed area. Keep hands clear of all crush areas. Do not drop cargo bed; lower gently and keep entire body clear. Failure to heed this warning could result in severe personal injury or death.**
- **Do not work on vehicle powertrain or under cargo bed when it is loaded.**
- **Turn the fuel shut-off valve to the closed (OFF) position (Figure 12, Page 24).**
- **To help avoid unintentionally starting the vehicle:**
  - **Disconnect battery cables, negative (–) cable first (Figure 1, Page 8).**
  - **Disconnect the spark plug wire from the spark plug.**
- **If wires are removed or replaced make sure wiring and wire harness are properly routed and secured. Failure to properly route and secure wiring could result in vehicle malfunction, property damage, personal injury, or death.**
- **Lift only one end of the vehicle at a time. Use a suitable lifting device (chain hoist or hydraulic floor jack) with 1000 lb. (454 kg) minimum lifting capacity. Do not use lifting device to hold vehicle in raised position. Use approved jack stands of proper weight capacity to support the vehicle and chock the wheels that remain on the floor. When not performing a test or service procedure that requires movement of the wheels, lock the brakes.**

PERIODIC SERVICE SCHEDULE

See General Warnings on page 9.

⚠ WARNING

- **Service, repairs, and adjustments must be made per instructions in the appropriate maintenance and service manual.**
- **If any problems are found during scheduled inspection or service, do not operate vehicle until repairs are made. Failure to make necessary repairs could result in fire, property damage, severe personal injury, or death.**

NOTE: *If the vehicle is constantly subjected to heavy use or severe operating conditions, these preventive maintenance procedures should be performed more often than recommended in the Periodic Service and Lubrication Schedules.*

Both the Periodic Service Schedule and the Periodic Lubrication Schedule must be followed to keep vehicle in optimum operating condition.

PERIODIC SERVICE SCHEDULE

REGULAR INTERVAL	SERVICE	
Daily service by owner	Pre-Operation and Daily Safety Checklist	**See Pre-Operation and Daily Safety Checklist on page 15.**
	Performance Inspection	**See Performance Inspection on page 16.**
Monthly service by owner or trained technician	Engine	Check engine oil level; change as required. **See Periodic Lubrication Schedule on page 29.**
		Check engine cooling air intake; visually inspect unshrouded area around engine exhaust for grass and debris and clean if necessary.
	Tires	Check air pressure and adjust if necessary. **See Vehicle Specifications on page 40.**
	General vehicle	Wash engine compartment and underside of vehicle. Do not wash engine when hot.
Semiannual service by trained technician only (or every 50 hours of operation, whichever comes first)	Battery	Clean terminals and wash dirt from casing; check electrolyte level. Add distilled water if necessary. **See page 36.**
	Front wheel alignment and toe-in	Check and adjust if necessary. **See Steering and Front Suspension in the appropriate maintenance and service manual.**
	Electrical wiring and connections	Check for tightness and damages
	Brake system	Inspect master cylinder, wheel cylinders, brake lines, and hoses for damage or leakage.
		Check park brake cables for damage; replace if necessary.
		Check brake shoes and drums; replace if necessary. **See Wheel Brake Assemblies in the appropriate maintenance and service manual.**
Annual service by trained technician only (or every 100 hours of operation, whichever comes first)	Engine	Check for leaks around gaskets, fill plugs, etc.
		Inspect, clean and gap spark plug; replace if necessary.
	Engine air intake system	Check air filter element; clean or replace if necessary.
		Check clamps for tightness; check hose for cracks.
	General vehicle	Check for loose hardware and tighten if necessary.
Two year service by trained technician only (or every 200 hours of operation, whichever comes first)	Fuel filters	Replace. Dispose of used filters properly. **See Engine Oil And Filter Change on page 31.**

PERIODIC LUBRICATION SCHEDULE

PERIODIC LUBRICATION SCHEDULE

REGULAR INTERVAL	SERVICE	LUBRICATION POINTS	RECOMMENDED LUBRICANT
Semiannually by owner or trained technician (or every 50 hours of operation, whichever comes first)	Brake pedal shaft bearings	1	Dry Moly Lube (CCI P/N 1012151)
	Accelerator push rod pivots, mounts, and shifter cable pivots	2	Dry Moly Lube (CCI P/N 1012151)
	Front suspension (2 fittings)	3	Chassis Lube (EP NLGI Grade 2)
Annually by trained technician only (or every 100 hours of operation, whichever comes first)	Check/fill transaxle to plug level	4	29 oz. (.85 liters) 80-90 Wt. API Class GL-3 or 80-90 Wt. AGMA Class 5 EP gear lubricant
	Inspect front wheel bearings (Repack as necessary)	5	Chassis Lube (EP NLGI Grade 2)
First change 100 hours – additional change every 200 hours of operation or annually, whichever comes first	Change engine oil and oil filter	6	32 oz. (0.95 liter) without filter; 38 oz. (1.12 liters) with filter. **See Oil Viscosity on page 34.**

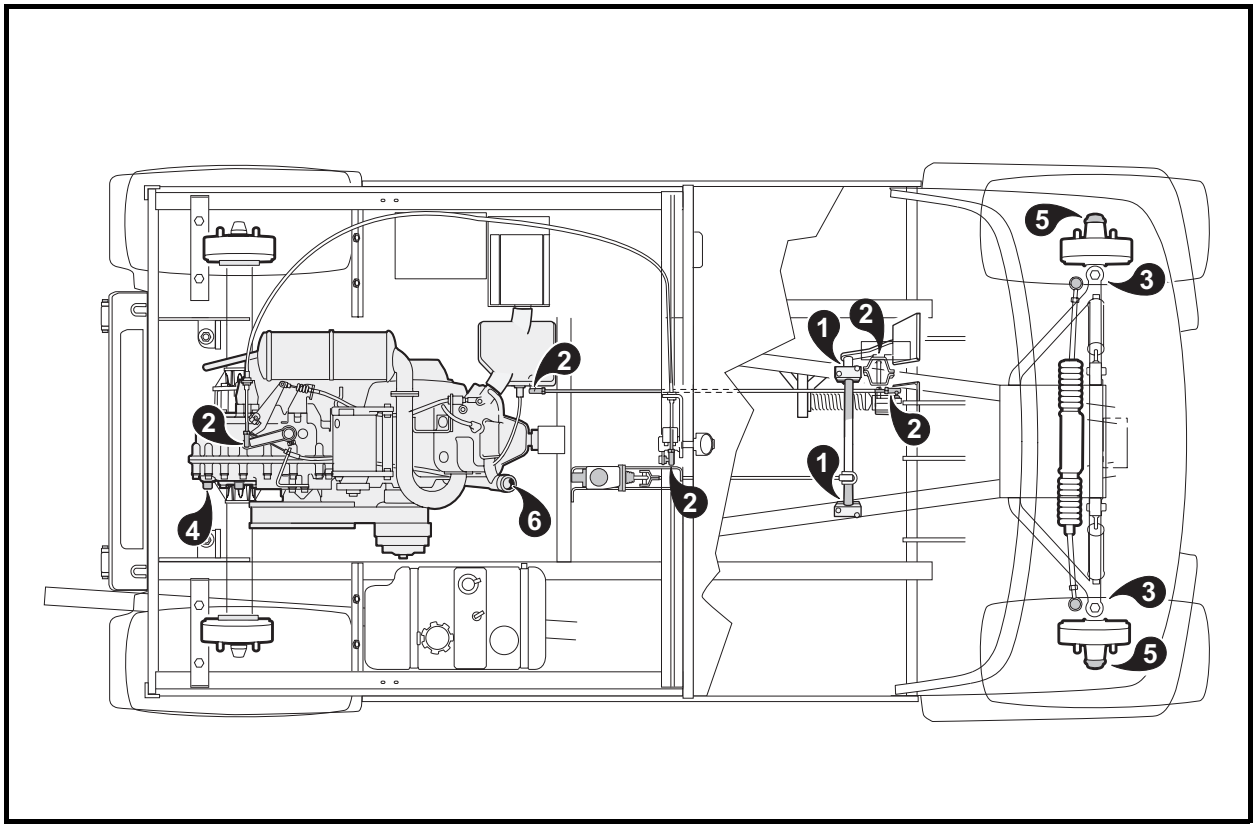

Figure 15 Lubrication Points

MASTER CYLINDER

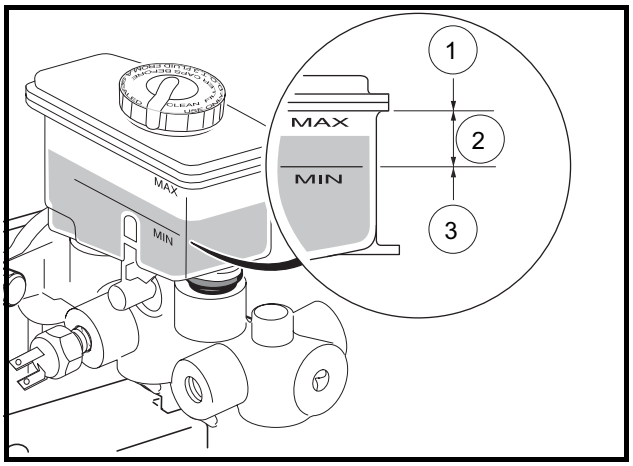

Figure 16 Brake Fluid Reservoir

1. Full Level 2. Safe Level 3. Low Level

The master cylinder is located under the passenger seat toward the center of the vehicle **(Figure 16)**. Raise or remove the seat to check the brake fluid level.

When checking the brake fluid, also inspect the following:

- The presence of brake fluid on the exterior surface of the master cylinder indicates a leak.
- The vent holes in the reservoir cover should be clean and open.
- The reservoir diaphragm should not have holes or other damage.

BRAKE FLUID

Brake fluid level should be within 1/4-inch (6 mm) from top of reservoir **(Figure 16)**. Also, brake fluid should be clean with no residue in bottom of reservoir or other evidence of contamination.

⚠ CAUTION

- **Use only DOT 5 (silicone) brake fluid. Use of any other type brake fluid is not recommended.**

ENGINE OIL

Even though the low oil warning light on the instrument panel should illuminate if oil becomes low, the engine oil level should be checked monthly. The vehicle should be on a level surface when checking oil. Do not overfill with oil.

ENGINE OIL LEVEL CHECK

1. Remove the oil level dipstick from the oil filler tube and wipe oil from dipstick. **See Figure 17**. **See following CAUTION.**

⚠ CAUTION

- **Do not remove dipstick while engine is running.**

2. Check oil by fully inserting the dipstick into the oil filler tube and immediately removing it.
3. If the oil level is at or below the low level mark on the dipstick gauge, add oil until the level is between low and full levels (safe level).

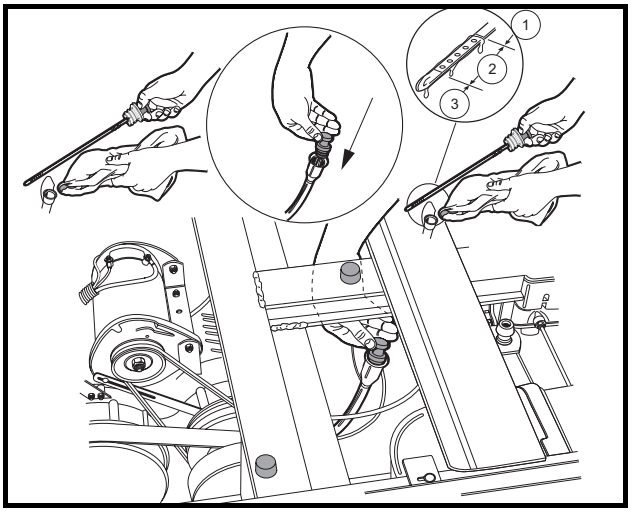

Figure 17 Engine Oil Level Check – Bobcat 2100

1. Full Level 2. Safe Level 3. Low Level

ENGINE OIL AND FILTER CHANGE

Engine oil and oil filter should be changed after the first 100 hours of operation. After that, they should be changed every 200 hours of operation or annually, whichever comes first.

1. Turn the key switch to the OFF position, then remove the key. Place the Forward//Reverse handle in the NEUTRAL position. Chock the front wheels.
2. Access the engine compartment. **See WARNING “For vehicles with cargo beds...” on page 9.**
3. Tilt the bed and ensure that the prop rod is properly engaged.
4. Disconnect the battery cables, negative (–) cable first. **See WARNING “To avoid unintentionally starting...” on page 9.**
5. Position a pan designed for oil changes under the front drain plug **(Figure 18)**.

6. Use a 14 mm socket or wrench to remove the drain plug, turning it counterclockwise, and allow the engine oil to drain into the pan.

⚠ WARNING

- **Do not attempt to change engine oil when the engine is hot or even warm. Engine oil can cause skin burns.**
- **Wear safety glasses or approved eye protection when servicing the vehicle. Wear rubber gloves when handling oil drain plug, oil filter, and oil drain pan.**

7. Clean the oil drain plug threads with solvent to remove oil and oil residue. Make sure that the compression washer remains on the drain plug.
8. Use a 14 mm socket or wrench and replace the front oil drain plug, turning it clockwise, and tighten to 18 ft-lb (24.4 N·m).

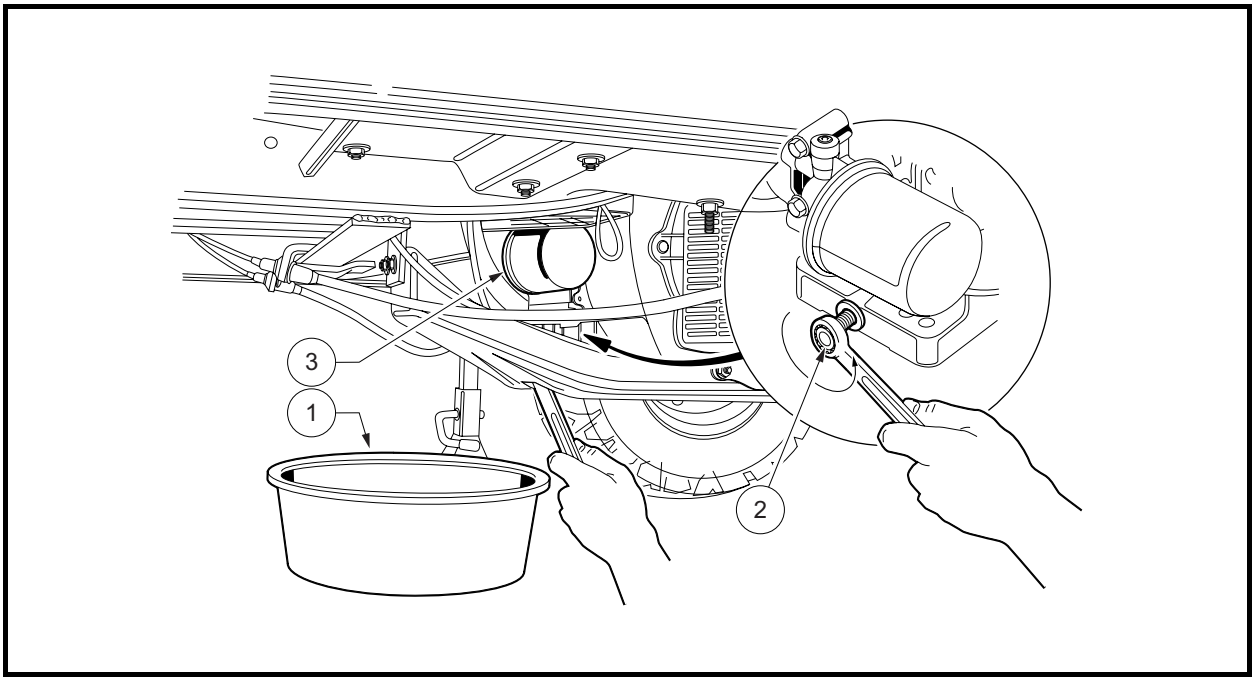

Figure 18 Engine Oil Drain Plug and Pan

1. Drain pan 2. Drain plug 3. Oil filter

9. Place a floor jack under the rear receiver hitch where the hitch and body frame are fastened. Lift the vehicle body slightly, allowing the front of the engine to tilt slightly downward. This will allow the oil filter more clearance under the electrical component box **(Figure 19)**.
10. Relocate the oil drain pan to a position under the engine oil filter **(Figure 20)**.
11. Remove the engine oil filter, turning it counterclockwise, allowing the residual oil in the filter port and filter to drain into the oil drain pan. **See following NOTE**

NOTE: *An oil drip guard can be used to prevent excess oil from dripping into the engine base plate. Use an empty quart (one liter) container and cut the bottom off at an angle, then slide the open area of the container up and under the oil filter prior to removing. Position the port of the plastic container so oil will be directed into the oil pan* ***(Figure 20, Page 33)****. A drip guard can be made by folding a*

piece of cardboard, thin metal, or plastic under the oil filter forming a channel to direct the filter port oil into the drain pan.

Dispose of used oil according to the environmental laws and regulations for your area.

12. Use a clean, lint-free rag and wipe the oil filter mounting bracket surface clean where the oil filter gasket seats.
13. To help seal the oil filter to the oil filter mounting bracket, apply a light coat of white lithium NLGI Number 2 grease (Dow Corning® BR2-Plus or equivalent) or new engine oil to the rubber seal around the outside surface of the filter before attaching it to the oil filter port **(Figure 21)**. Install a new oil filter (CCI P/N 1016467) onto the engine oil filter port. **See following NOTE.**

NOTE: *Use only Bobcat oil filters (CCI P/N 1016467) designed for this engine.*

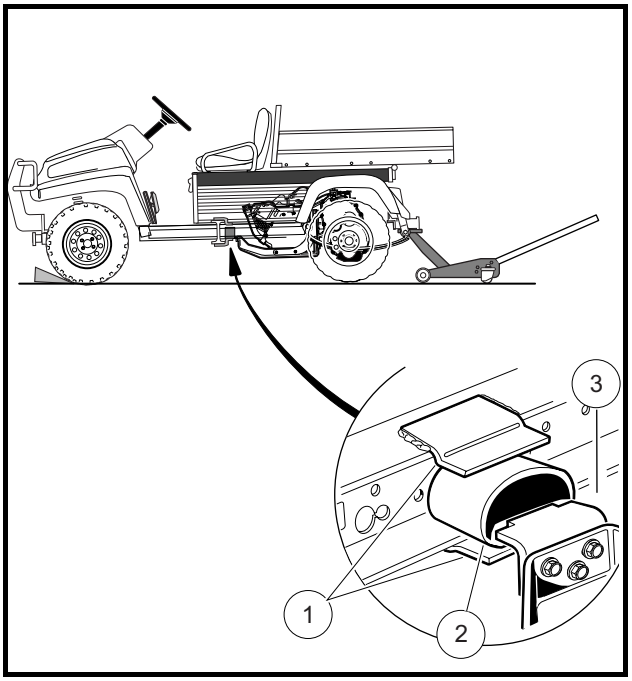

Figure 19 Compress Snubber Downward

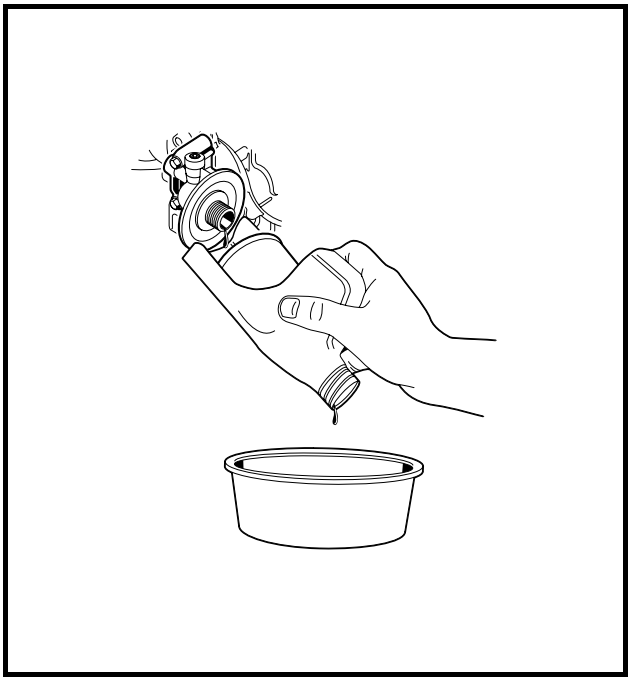

Figure 20 Remove Engine Oil Filter

1. Snubber Bracket 2. Snubber 3. Compress Down

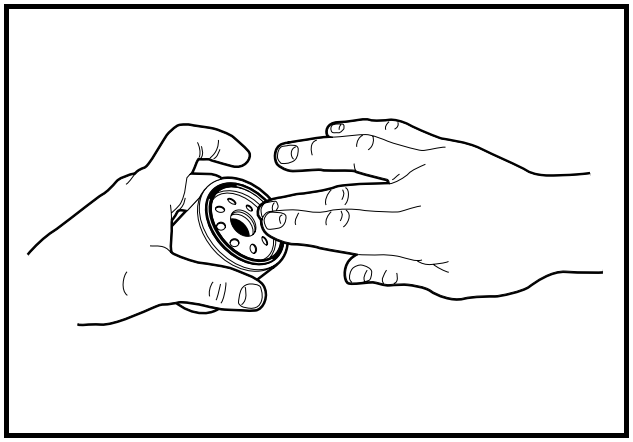

Figure 21 Coat Rubber Seal

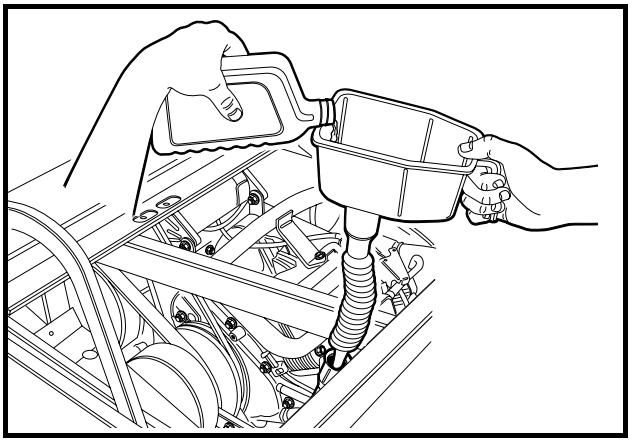

Figure 22 Add Engine Oil

14. Tighten the oil filter by hand until tight. Do not use a band wrench or channel lock plier to tighten.
15. Lower the vehicle and remove the floor jack from under the rear of the vehicle.
16. Remove the dipstick and add engine oil into the dipstick port. Use a funnel or pour spout to direct the oil into the dipstick port **(Figure 22)**. With filter change, the engine requires 38 ounces (1.12 liters) of oil per change. Refer to oil viscosity guidelines for selection of oil grade **(Figure 23)**. Replace the dipstick.
17. Connect the battery cables, positive (+) cable first, and tighten terminals to 12 ft-lb (16 N·m). Coat terminals with Battery Terminal Protector Spray (CCI P/N 1014305).
18. Lower the cargo bed. **See WARNING "For vehicles with cargo beds..." on page 9.**
19. With the Forward/Reverse handle in the NEUTRAL position, start and run the engine for a few minutes. Observe both the drain plug and the oil filter from under the vehicle and watch for oil leaks. If leaks appear, begin with step 1 and repeat the appropriate step for either or both items to correct the problem.
20. Remove the dip stick and check the engine oil as a final step. Replace the dip stick.

OIL VISCOSITY

Choose the viscosity according to the temperature as indicated by the oil viscosity chart **(Figure 23)**.

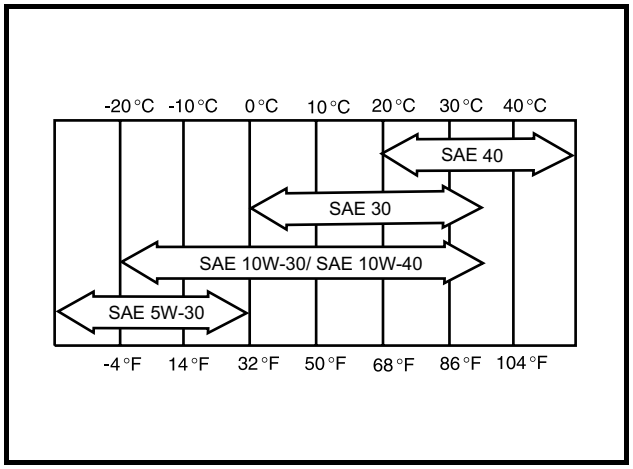

Figure 23 Oil Viscosity Chart

NOTE: *Using multi-grade oils (5W-20, 10W-30, and 10W-40) will increase oil consumption. Check oil level more frequently when using them.*

FUELING INSTRUCTIONS

See General Warnings on page 9.

⚠ DANGER

- **Turn the key switch to the OFF position before fueling.**
- **Do not pour fuel into the fuel tank when the engine is hot or while it is running.**
- **To help avoid electric arc caused by static electricity, the fuel storage/pumping device must be grounded. If the pump is not grounded, the vehicle must be grounded to the pump before and during the fueling operation.**
- **If vehicle has an all-weather enclosure installed, be sure the fuel tank is properly vented as shown (Figure 24, Page 36.**
- **To help avoid the possibility of fire, clean up any spilled fuel before operating the vehicle.**

⚠ CAUTION

- **To allow for expansion, do not fill higher than 2.54 cm (one inch) from the top of the fuel tank. Avoid spilling fuel.**

1. Remove the passenger seat.
2. Remove fuel cap and fill tank with fresh unleaded gasoline only. **See preceding DANGER and CAUTION.**

NOTE: *Whenever possible, avoid using oxygenated fuels and fuels that are blended with alcohol. Vehicles to be stored for extended periods should be prepared for storage as instructed.* ***See Preparing the Vehicle for Extended Storage on page 23.***

3. Replace fuel cap on tank. Ensure cap is tightened securely.
4. Clean any spilled fuel from the tank top and around the tank area.
5. Replace passenger seat.

⚠ WARNING

- **Make sure seat hinges and latch are securely engaged before operating vehicle.**

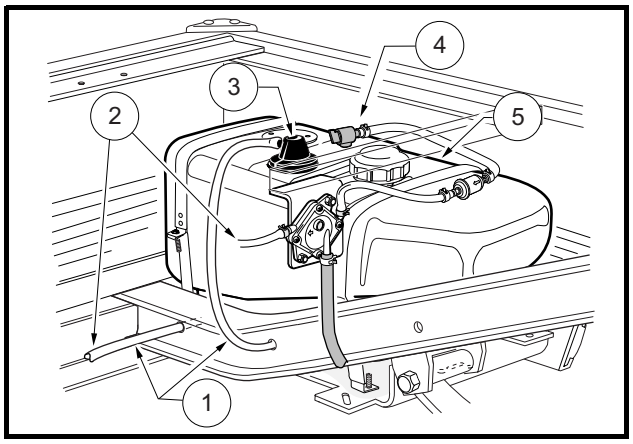

Figure 24 Fuel Tank – Bobcat 2100

1. Vent Tube 2. To Carburetor 3. Vent 4. Fuel Shut-off Valve
5. Fuel Tank

BATTERY

See General Warnings on page 9.

⚠ DANGER

- **Battery – Explosive gases! Do not smoke. Keep sparks and flames away from the vehicle and service area. Ventilate when charging or operating vehicle in an enclosed area. Wear a full face shield and rubber gloves when working on or near batteries.**
- **Tools, wires and metal objects can cause sparks when shorted across a battery. Follow all instructions carefully when working with batteries.**
- **Charge battery in a well-ventilated area only.**
- **Battery – Poison! Contains acid! Causes severe burns. Avoid contact with skin, eyes or clothing. Antidotes:**
  - **External: Flush with water. Call a physician immediately.**
  - **Internal: Drink large quantities of milk or water followed with milk of magnesia or vegetable oil. Call a physician immediately.**
  - **Eyes: Flush with water for 15 minutes. Call a physician immediately.**

⚠ WARNING

- **Do not jump-start a dead battery using another battery and jumper cables.**

The battery in a Bobcat vehicle is a 12-volt, low-maintenance battery that requires infrequent checks **(Figure 25)**. Electrolyte level should be checked semiannually.

1. Turn the key switch to the OFF position and remove the key. Place the Forward/Reverse handle in the NEUTRAL position. Chock the wheels.

2. Access the engine compartment. **See WARNING "For vehicles with cargo beds..." on page 9.**
3. Tilt the bed and ensure that the prop rod is properly engaged.
4. Disconnect the battery cables, negative (–) cable first. **See WARNING "To avoid unintentionally starting..." on page 9.**
5. Use a flat blade screwdriver, and carefully remove the battery cell caps from the battery **(Figure 25)**. **See following WARNING.**

⚠ WARNING

- **Wear safety glasses or approved eye protection when servicing the vehicle. Wear a full face shield and rubber gloves when working on or near batteries.**

6. Carefully check the electrolyte level and add distilled water if necessary. Do not fill above designated fill line. Replace battery cell caps.
7. Clean both battery terminals with a solution of baking soda and water (1 cup (237 mL) baking soda per gallon (3.8 L) of water). Rinse thoroughly. Do not allow this solution to enter the battery. Tighten battery terminals to 12 ft-lb (16 N·m). Let the terminals dry and then spray them with Battery Terminal Protector Spray (CCI P/N 1014305). **See following WARNING.**

⚠ WARNING

- **If battery wire terminals are damaged or corroded, replace or clean them as necessary. Failure to do so may cause them to overheat during operation and could result in fire, property damage, or personal injury.**

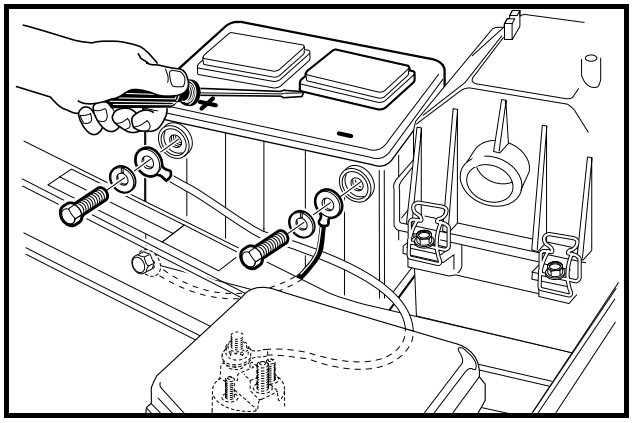

Figure 25 Battery

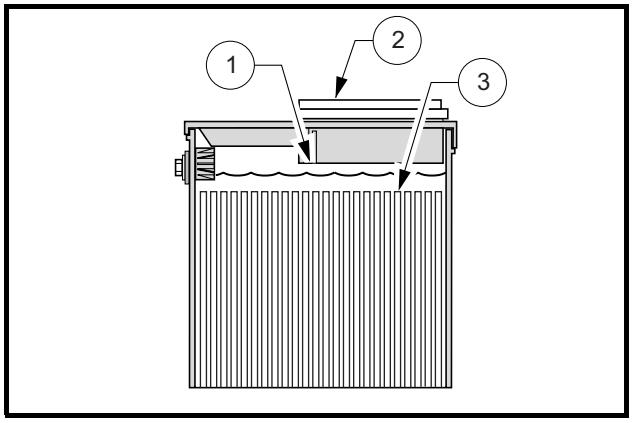

Figure 26 Battery Electrolyte Level

1. Level Indicator 2. Cap 3. Plates
Electrolyte level at least 1/2 inch (13 MM) above plates or to level indicator.

Be sure battery hold-down clamp is properly tightened. Tighten to 12 ft-lb (16 N·m). A loose clamp may allow the battery to become damaged from vibration or jarring.

If battery appears weak, have it charged by a trained technician. The battery should never be left discharged any longer than absolutely necessary (do not leave discharged overnight).

CLEANING THE VEHICLE

Each vehicle is equipped with an ABS/DR acrylic front body and an all-aluminum rear body and cargo bed. Use a commercial automotive cleaning solutions with a sponge or soft cloth for normal cleaning. A garden hose at normal residential water pressure is adequate. To remove oxidation or discoloration from aluminum, use a commercially available aluminum cleaner paste and fine grade (No. 00) steel wool.

Bobcat does not recommend any type of pressure washing or steam cleaning. Such a process will expose electrical components to moisture. Moisture entering electrical components can result in water damage and subsequent component failure.

Use non-abrasive wax products. Battery acid, fertilizers, tars, asphalt, creosote, paint, or chewing gum should be removed immediately to prevent possible stains.

The front body is made of an ABS/DR acrylic cap material similar to the material used to manufacture hot tubs and shower/tub units. Cleaning and repair techniques for the front body are the same as those used on conventional acrylic sheet. Use cleaning and polishing products available at any hardware store where ABS/DR acrylic (hot tubs and shower/tub units) are sold.

The seats of the vehicle will last longer with proper cleaning. Use a solution of 10% liquid soap and warm water applied with a soft cloth. For imbedded dirt, a soft bristle brush may be used. For heavy soiling, difficult stains, or scratches, blemishes, or other body damage, see the appropriate maintenance and service manual. **See following NOTE.**

NOTE: *Dispose of waste water properly.*

ACCESSORIES

There is a complete line of accessory equipment available from Bobcat and our dealers/distributors. You can obtain the name and phone number of your closest Bobcat contact by visiting our web site at www.bobcat.com and clicking the "*Dealer Locator*" link.

Care should be taken that these accessories are properly installed by trained technicians, and that they are used in the manner for which they were designed. **See following WARNING.**

⚠ WARNING

- **Custom cab assemblies, canopy tops, weatherproof enclosures, and windshields will not protect occupants from flying objects.**
- **If the vehicle is equipped with an electric powered bed lift, remove the bed before servicing the bed lift system.**

ELECTRIC WINCH ACCESSORY

If your vehicle is equipped with an electric winch, read and follow all manufacturer safety warnings and instructions in the winch operator manual, as well as the following WARNING and CAUTION statements. Make sure a winch warning decal is affixed to the vehicle on the seat support panel next to the receptacle for the remote operation switch. **See Safety Decal and Feature Identification on page 4.**

The winch kit available from Bobcat includes a remote operation switch, which enables the operator to move away from the vehicle and cable. **See following WARNING and CAUTION.**

⚠ WARNING

- **Before beginning a winch operation:**
  - **Turn the key switch to the OFF position, put Forward/Reverse handle in the NEUTRAL position, and engage the parking brake.**
  - **Do not use winch while persons are seated on the vehicle.**
- **Stand to the side and away from the vehicle to operate winch.**

CAUTION

- **Use of the winch for an extended period of time could discharge the battery. Keep winch operations as short as possible, and drive the vehicle for several minutes after the winch operation to recharge the battery.**

SUBSEQUENT OWNER REGISTRATION

In the event a vehicle is bought as a used vehicle, we strongly urge the new owner to register the vehicle with Bobcat. This will enable us to contact you if the need arises. Please send your name, address, and serial number(s) of the vehicle(s) to Bobcat Company., P.O. Box 128, Gwinner, ND 58040-0128, Attention: Vehicle Registration.

VEHICLE SPECIFICATIONS

SPECIFICATIONS	BOBCAT 2100
POWER SOURCE	
Engine: 4-cycle OHV, 400 cc, 13 hp rated, single-cylinder, air-cooled, with pressure lubrication system	•
Fuel system: Side-draft carburetor with float bowl, fixed jets, fuel filters, and impulse fuel pump	•
Governor: Automatic ground-speed sensing, internally geared in unitized transaxle	•
Ignition: Transistor electronic ignition with electronic RPM limiter	•
Unitized transaxle: Fully synchronized forward and reverse with neutral (14.9:1 forward, 20.5:1 reverse) and differential lock feature	•
Electrical system: 12 volt, 500 cca at 0 °F (-17.8 °C), 650 at 32 °F (0 °C). 105-minute reserve capacity and 35-amp charging capacity	•
Torque converter: Automatic, variable-speed, dry type	•
STEERING/SUSPENSION/BRAKES	
Steering: Self-adjusting rack and pinion, Ackerman	•
Suspension: **Front:** Independent A-arms with coil-over shocks **Rear:** Semi-independent suspension with multi-leaf springs and dual hydraulic shocks	•
Brakes: Hydraulic brake system – self-adjusting drum brakes on each wheel with separate hand-operated park brake	•
BODY/CHASSIS	
Frame/Chassis: Twin I-Beam welded aluminum	•
Side and rear body: All aluminum	•
Cargo bed: All aluminum	
Cargo bed: Powder-coated steel	•
Front body: ABS/DR acrylic cap	•
Tires: 23 x 10.50 – 12 tubeless, 4 ply rated load range, front and rear	•
DIMENSIONS/WEIGHT	
Overall length (box bed configuration)	123.4 in. (313.4 cm)
Overall width	54 in. (137 cm)
Overall height (at steering wheel)	51 in. (130 cm)
Wheelbase	80 in. (203 cm)
Ground clearance: under differential under foot platform	 6.6 in. (17 cm) 11.4 in. (29 cm)
Front wheel tread	43 in. (109 cm)
Rear wheel tread	44.5 in. (111 cm)
Weight (dry): with all-terrain tread with turf tread	 1106 lb. (493.4 kg) 1066 lb. (477.2 kg)
Forward speed	17-19 mph (27-31 km/h)
Governed RPM: FE400 Engine	3850 (±30) RPM
Curb clearance circle (diameter)	24 ft. 1 in. (734 cm)
Turning radius (per SAE J 695)	139.6 in. (355 cm)
Intersecting aisle clearance	112.2 in (285 cm)
Specifications continued on next page...	

SPECIFICATIONS	BOBCAT 2100
DIMENSIONS/WEIGHT, Continued	
Intersecting aisle clearance	112.2 in (285 cm)
Floorboard height	17 in. (43 cm)
Seat height	35 in. (89 cm)
Load bed height	31.1 in. (79 cm)
Load bed size (box bed inside dimensions)	48.0 x 49.8 x 10.9 in. (121.4 x 126.4 x 27.6 cm) (15.3 cubic feet)
Load bed size (flat bed dimensions)	46.9 x 48.3 in. (119 x 123 cm)
Vehicle rated capacity (level surface only)	1200 lb. (544 kg)
Bed load capacity (level surface only)	800 lb. (363 kg)
Standard seating capacity	2
LIQUID CAPACITIES	
Engine crankcase without filter	32 oz. (.95 liters)
Engine crankcase with filter	38 oz. (1.12 liters)
Unitized transaxle	29 oz. (.85 liters)
Master cylinder	8 oz. (240 ml)
Fuel tank	7 gallons (26.5 liters)
TIRE PRESSURE	
All-terrain tread (standard)	Front: 7-11 psi (.48-.76 Bars) Rear: 14-18 psi (.97-1.24 Bars)
Turf tread (optional)	Front: 12-16 psi (.83-1.10 Bars) Rear: 16-20 psi (1.10-1.38 Bars)
Traks Max II tread (optional)	Front: 14-16 psi (.97-1.10 Bars) Rear: 18-20 psi (1.24-1.38 Bars)

WARRANTY

BOBCAT UTILITY VEHICLES

Bobcat Company warrants to its authorized dealers and authorized dealers of Bobcat Equipment Ltd., who in turn warrant to the owner, that each new Bobcat Utility Vehicle will be free from proven defects in material and workmanship with respect to all components of the vehicle except as otherwise specified herein for a period of twelve (12) months or 1000 hours of operation, whichever occurs first, after delivery by the authorized Bobcat dealer to the original buyer, and with respect to the engine assembly, unitized transaxle assembly and the main frame assembly for a period of twenty four (24) months or 2000 hours of operation, whichever occurs first, after delivery by the authorized Bobcat dealer to the original buyer.

During the warranty period, the authorized Bobcat dealer shall repair or replace, at Bobcat Company's option, without charge for parts and labor, any part of the Bobcat product which fails because of defects in material or workmanship. The owner shall provide the authorized Bobcat dealer with prompt written notice of the defect and allow reasonable time for repair or replacement. Bobcat Company may, at its option, require failed parts to be returned to the factory. Travel time of mechanics and transportation of the Bobcat product to the authorized Bobcat dealer for warranty work are the responsibility of the owner. The remedies provided in this warranty are exclusive.

This warranty does not apply to tires. The owner shall rely solely on the warranty, if any, of the manufacturer thereof. This warranty does not cover replacement of scheduled service items such as oil, filters, tune-up parts, brake wear components and other high-wear items. This warranty does not cover damages resulting from abuse, accidents, alterations, use of flow obstructions, or failure to maintain or use the Bobcat product according to the instructions applicable to it.

THIS WARRANTY IS EXCLUSIVE AND IN LIEU OF ALL OTHER WARRANTIES AND CONDITIONS, EXCEPT THE WARRANTY OF TITLE. BOBCAT COMPANY DISCLAIMS ALL OTHER WARRANTIES AND CONDITIONS, EXPRESS OR IMPLIED, INCLUDING ANY IMPLIED WARRANTIES OR CONDITIONS OF MERCHANTABLILITY OR FITNESS FOR A PARTICULAR PURPOSE. IN NO EVENT SHALL BOBCAT COMPANY OR THE AUTHORIZED BOBCAT DEALER BE LIABLE FOR ANY SPECIAL, INCIDENTAL, INDIRECT OR CONSQUENTIAL DAMAGES WHATSOEVER, INCLUDING, BUT NOT LIMITED TO, LOSS OR INTERRUPTION OF BUSINESS, LOST PROFITS, OR LOSS OF MACHINE USE, WHETHER BASED ON CONTRACT, WARRANTY, TORT, NEGLIGENCE, STRICT LIABILITY, STATUTE OR OTHERWISE, EVEN IF BOBCAT COMPANY OR THE AUTHORIZED BOBCAT DEALER HAS BEEN ADVISED OF THE POSSIBILITY OF SUCH DAMAGES.THE TOTAL LIABILITY OF BOBCAT COMPANY AND THE AUTHORIZED BOBCAT DEALERS WITH RESPECT TO THE PRODUCT AND SERVICES FURNISHED HEREUNDER SHALL NOT EXCEED THE PURCHASE PRICE OF THE PRODUCT UPON WHICH SUCH LIABILITY IS BASED.

CALIFORNIA EMISSION CONTROL WARRANTY STATEMENT

YOUR WARRANTY RIGHTS AND OBLIGATIONS

The California Air Resources Board ("CARB") and Bobcat ("BOBCAT") are pleased to explain the emission control system warranty on your 2009 vehicle engine (the "emission warranty"). In California, new small off-road engines ("SORE") must be designed, built and equipped to meet the State's stringent anti-smog standards. BOBCAT shall warrant the emission control system on the vehicle engine for the periods of time listed below provided there has been no abuse, neglect or improper maintenance of your small off-road engine.

Your emission control system may include parts such as the carburetor or fuel-injection system, the ignition system, the catalytic converter and related hoses, belts, connectors and other emission assemblies or components.

Where a warrantable condition exists, as defined herein, BOBCAT will repair your vehicle engine at no cost to you including diagnosis, parts and labor.

MANUFACTURER'S WARRANTY COVERAGE:

This emission control system is warranted for two years from the vehicles' date of purchase. If any emission-related part on your BOBCAT SORE is defective, the part will be repaired or replaced by BOBCAT.

OWNER'S WARRANTY RESPONSIBILITIES:

- As the vehicle engine owner, you are responsible for the performance of the required maintenance listed in your owner's manual. BOBCAT recommends that you retain all receipts covering maintenance on your vehicle engine, but BOBCAT cannot deny warranty solely for the lack of receipts or for your failure to ensure the performance of all scheduled maintenance.

- As the vehicle engine owner, you should however be aware that BOBCAT may deny you warranty coverage if vehicle engine or a part has failed due to abuse, neglect, improper maintenance or unapproved modifications.

- You are responsible for presenting vehicle engine to a BOBCAT distribution center as soon as a problem exists. The warranty repairs should be completed in a reasonable amount of time, not to exceed 30 days.

If you have any questions regarding your warranty rights and responsibilities, you should contact WARRANTY SERVICES, Bobcat, P.O. Box 128, Gwinner, ND, 58040-0128, U.S.A. 701-678-6165.

BOBCAT EXPLANATION OF EMISSION CONTROL WARRANTY

1. Warranty:

BOBCAT warrants to the ultimate purchaser and each subsequent purchaser that the SORE and related emissions equipment is designed, built and equipped so as to conform with all applicable California environmental emission regulations; and free from defects in materials and workmanship that cause the failure of a warranted part to be identical in all material respects to that part as described in BOBCAT's application for certification with CARB. The warranty period begins on the date the engine or equipment is delivered to an ultimate purchaser or first placed into service. The warranty period is two years from the date of purchase.

2. COVERAGE:

Subject to certain conditions and exclusions as stated below, the warranty on emission-related parts is as follows:

(1) Any warranted part that is not scheduled for replacement as required maintenance in the written instructions supplied, is warranted for the warranty period stated above. If the part fails during the period of warranty coverage, the part will be repaired or replaced by BOBCAT according to subsection (4) below. Any such part repaired or replaced under warranty will be warranted for the remainder of the original warranty period.

(2) Any warranted part that is scheduled only for regular inspection in the written instructions supplied is warranted for the warranty period stated above. Any such part repaired or replaced under warranty will be warranted for the remaining original warranty period.

(3) Any warranted part that is scheduled for replacement as required maintenance in the written instructions supplied is warranted for the period of time before the first scheduled replacement date for that part. If the part fails before the first scheduled replacement, the part will be repaired or replaced by BOBCAT according to subsection (4) below. Any such part repaired or replaced under warranty will be warranted for the remainder of the period prior to the first scheduled replacement point for the part.

(4) Repair or replacement of any warranted part under the warranty provisions herein must be performed at a warranty station* at no charge to the owner.

(5) Notwithstanding the provisions herein, warranty services or repairs will be provided at all of our distribution centers that are franchised to service the subject engines or equipment.

(6) The engine or equipment owner will not be charged for diagnostic labor that is directly associated with diagnosis of a defective, emission-related warranted part, provided that such diagnostic work is performed at a warranty station*.

(7) BOBCAT is liable for damages to other engine or equipment components proximately caused by a covered failure under warranty of any warranted part.

(8) Throughout the engine or equipment warranty period stated above, BOBCAT will maintain a supply of warranted parts sufficient to meet the expected demand for such parts.

(9) Any replacement part may be used in the performance of any warranty maintenance or repairs and must be provided without charge to the owner. Such use will not reduce the warranty obligations of BOBCAT

(10) Add-on or modified parts that are not exempted by the Air Resources Board may not be used. The use of any non-exempted add-on or modified parts by the ultimate purchaser will be grounds for disallowing a warranty claims. BOBCAT will not be liable to warrant failures of warranted parts caused by the use of a non-exempted add-on or modified part.

*BOBCAT, its authorized dealers, or a service agency approved by BOBCAT.

ITEMS COVERED BY THIS WARRANTY:

The repair or replacement of any warranted part otherwise eligible for warranty coverage may be excluded from such warranty coverage if BOBCAT demonstrates that the engine or equipment has been abused, neglected, or improperly maintained, and that such abuse, neglect, or improper maintenance was the direct cause of the need for repair or replacement of the part. That notwithstanding, any adjustment of a component that has a factory installed, and properly operating, adjustment limiting device is still eligible for warranty coverage. The following emission warranty parts list are covered:

SYSTEMS COVERED PARTS DESCRIPTION

Fuel Metering Carburetor assembly, fuel injection pump, fuel injection nozzle, fuel regulator Exhaust Catalytic Converter, Exhaust Manifold Air Induction Air filter housing, air filter*, crankcase breather tube Ignition Flywheel magneto, ignition pulse generator, ignition coil assembly, ignition control module, spark plug cap, spark plug* Positive Crankcase Ventilation (PCV) System PCV valve, oil filler cap Evaporative System Fuel Tank, Fuel Cap, Fuel Lines, Fuel Line Fittings, Clamps, Pressure Relief Valves, Purge Valves, Vapor Hoses, Carbon Canister, Canister Mounting Brackets, Carbon Canister Purge Port Connector Misc. Parts Belts, hosing, tubing, fittings, seals, gaskets, clamps, and switches associated with the above systems.

Emission-related parts will vary between vehicles; therefore, certain vehicles may not include all of the listed parts or may include equivalent parts.

3. VOIDING OF WARRANTY:

THIS AND ANY OTHER WARRANTY SHALL BE VOID IF THE VEHICLE IS ABUSED OR USED IN AN UNINTENDED MANNER OR SHOWS INDICATIONS THAT IT HAS BEEN ALTERED IN ANY WAY, INCLUDING, BUT NOT LIMITED TO, MODIFICATION OF THE SPEED GOVERNOR, BRAKING SYSTEM, STEERING, TRANSAXLE, OR OTHER OPERATING SYSTEMS OF THE VEHICLE TO CAUSE IT TO PERFORM OUTSIDE BOBCAT SPECIFICATIONS.

4. HOW TO MAKE A WARRANTY CLAIM:

To make a warranty claim under this limited warranty, you must present the vehicle or defective component to an authorized BOBCAT dealer or send the defective component, freight prepaid, to WARRANTY SERVICES, Bobcat, P.O. Box 128, Gwinner, ND, 58040-0128, U.S.A. 701-678-6165.

EMISSION CONTROL INFORMATION

Fuel Information

THIS VEHICLE IS CERTIFIED TO OPERATE ON UNLEADED REGULAR GRADE GASOLINE ONLY.A minimum of 87 octane of the anti-knock index is recommended.The anti-knock index is posted on service station pumps in the U.S.A.

Emission Control Information

To protect the environment in which we all live, Bobcat has incorporated crankcase emission (1) and exhaust emission (2) control systems (EM) in compliance with applicable regulations of the U.S.Environmental Protection Agency and California Air Resources Board.

1.Crankcase Emission Control System

A sealed-type crankcase emission control system is used to eliminate blow-by gases.The blow-by gases are led to the breather chamber through the crankcase.Then, it is led to the air cleaner.

Oil is separated from the gases while passing through the inside of the breather chamber from the crankcase, and then returned back to the bottom of the crankcase.

2.Exhaust Emission Control System

The exhaust emission control system applied to this engine consists of a carburetor and an ignition system having optimum ignition timing characteristics.

The carburetors have been calibrated to provide lean air/fuel mixture characteristics and optimum fuel economy with a suitable air cleaner and exhaust system.

Maintenance and Warranty

Proper maintenance is necessary to ensure that your engine will continue to have low emission levels.Those items identified by the Periodic Maintenance Chart are necessary to ensure compliance with the applicable standards.

The Bobcat Limited Emission Control System Warranty requires that you return your engine to an authorized Bobcat Dealer for remedy under warranty.Please read the warranty carefully, and keep it valid by complying with the owner's obligations it contains.

Tampering with Emission Control System Prohibited

California State law prohibits the following acts or the causing thereof:(1) the removal or rendering inoperative by any person other than for purposes of maintenance, repair, or replacement, of any device or element of design incorporated into any new engine for the purposes of emission control prior to its sale or delivery to the ultimate purchaser or while it is in use, or (2) the use of the engine after such device or element of design has been removed or rendered inoperative by any person.

Among those acts presumed to constitute tampering are the acts listed below:

Do not tamper with the original emission related parts:

- Carburetor and internal parts
- Spark plugs
- Magneto or electronic ignition system
- Fuel filter element
- Air cleaner element
- Crankcase
- Cylinder head
- Breather chamber and internal parts
- Intake pipe and tube

FUEL AND OIL RECOMMENDATIONS

Fuel

Use only clean, fresh, unleaded regular grade gasoline.

Octane Rating

The octane rating of a gasoline is a measure of its resistance to "knocking".Use of a minimum of 87 octane of the anti-knock index is recommended.The anti-knock index is posted on service station pumps in the U.S.A.

NOTE

- If "knocking or pinging"occurs, use a different brand of gasoline or higher octane rating.

⚠ CAUTION

- Do not mix oil with gasoline.

Oxygenated Fuel

If you use oxygenated fuel (either ethanol or MTBE added to gasoline), be sure it is unleaded and meets the minimum octane rating requirement.

The following are the EPA approved percentages of fuel oxygenates.

ETHANOL:(Ethyl or Grain Alcohol) You may use gasoline containing up to 10% ethanol by volume.

MTBE:(Methyl Tertiary Butyl Ether) You may use gasoline containing up to 15% MTBE by volume.

METHANOL:(Methanol or Wood Alcohol) 5% by volume.

You may use gasoline containing up to 5% methanol by volume, as long as it also contains cosolvents and corrosion inhibitors to protect the fuel system.Gasoline containing more than 5% methanol by volume may cause starting and/or performance problems.It may also damage metal, rubber, and plastic parts of your fuel system.

⚠ WARNING

- Gasoline is extremely flammable and can be explosive under certain conditions.Turn the engine switch OFF. Do not smoke.Make sure the area is well ventilated and free from any source of flame or sparks;this includes any appliance with a pilot light.Never fill the tank so the fuel level rises into the filler neck.If the tank is overfilled, heat may cause the fuel to expand and overflow through the vent in the fuel tank.

Engine Oil

The following engine oils are recommended.

API Service Classification:SC, SD, SE, SF, SG, or SH.

⚠ WARNING

- After refueling, make sure the tank cap is closed securely.
- If gasoline is spilled on the fuel tank wipe it off immediately.

Oil Viscosity

Choose the viscosity according to the temperature as follows:

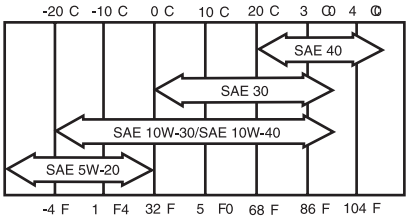

NOTE

- Using multi-grade oils (5W-20, 10W-30, and 10W-40) will increase oil consumption.Check oil level more frequently when using them.

Publication Part Number 103472539
Edition Code 0409B0409A