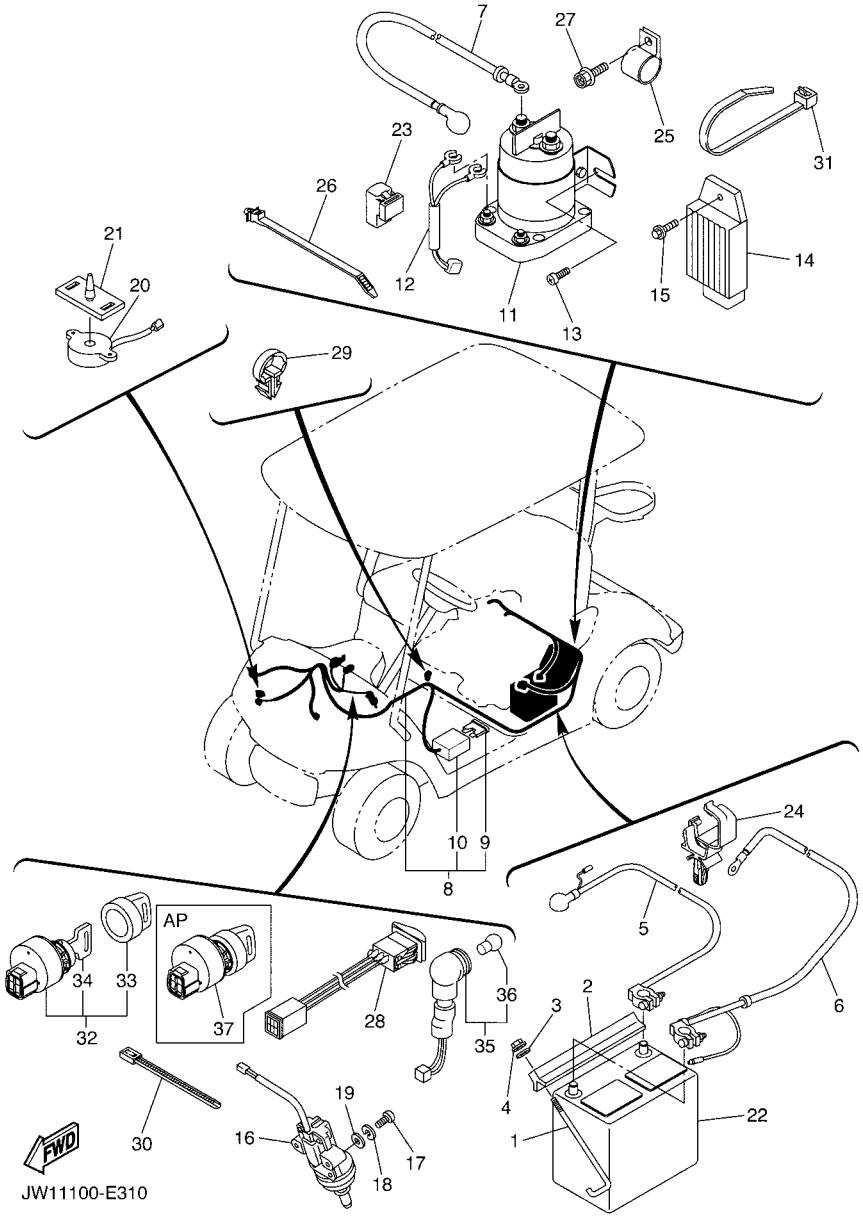

FIG. 31 ELECTRICAL 2

REF. NO.	PART NO.	DESCRIPTION	JW11					REMARKS
28	JW1–H2917–00	SWITCH	1					
29	90464–19815	CLAMP	1					
30	90464–40825	CLAMP	1					
31	90464–76800	CLAMP	1					
32	JU2–H2510–10	MAIN SWITCH ASSY	1					COMMON KEY SWITCH
33	5UG–H2579–00	.CAP, KEY	1					
34	JU2–H2511–00	.KEY, MAIN SWITCH	1					
35	JN6–83530–00	PILOT LIGHT ASSY	1					
36	123–83516–21	.BULB (12V-3.4W)	1					
37	JU2–H2510–20	MAIN SWITCH ASSY	1					MULTI-KEY SWITCH